TRAFFIC IMPACT ANALYSIS REPORT
PULELEHUA DEVELOPMENT

Lahaina, Maui, Hawaii

FINAL DRAFT

November 15, 2017

Prepared for:

Maui Oceanview LP
2525 McKinney Ave., Suite B
Dallas, Texas 75201

Austin, Tsutsumi & Associates, Inc.
Civil Engineers • Surveyors
501 Sumner Street, Suite 521
Honolulu, Hawaii 96817-5031
Telephone: (808) 533-3646
Facsimile: (808) 526-1267
E-mail: atahnl@atahawaii.com
Honolulu • Wailuku • Hilo, Hawaii

TRAFFIC IMPACT ANALYSIS REPORT

PULELEHUA DEVELOPMENT

Lahaina, Maui, Hawaii

FINAL DRAFT

Prepared for

Maui Oceanview LP

Prepared by
Austin, Tsutsumi & Associates, Inc.
Civil Engineers • Surveyors
Honolulu • Wailuku • Hilo, Hawai‘i

November 15, 2017

AUSTIN, TSUTSUMI & ASSOCIATES, INC. CIVIL ENGINEERS • SURVEYORS
CONTINUING THE ENGINEERING PRACTICE FOUNDED BY H. A. R. AUSTIN IN 1934

TERRANCE S. ARASHIRO, P.E.
ADRIENNE W.L.H. WONG, P.E., LEED AP
DEANNA M.R. HAYASHI, P.E.
PAUL K. ARITA, P.E.
ERIK S. KANESHIRO, L.P.L.S, LEED AP
MATT K. NAKAMOTO, P.E.
GARRETT K. TOKUOKA, P.E.

ADRIENNE W.L.H. WONG, P.E., LEED AP
Maui Branch Manager

PULELEHUA DEVELOPMENT

EXECUTIVE SUMMARY

Maui Oceanview LP is proposing to develop the Pulelehua development (hereinafter referred to as "Project") in Lahaina, Maui. The Project will be bounded by Honoapiilani Highway to the west, Kapalua Airport to the east and proposes to develop approximately 304.255 acres of land.

Project Descripton

The Project will provide 898 multi-family (MF) residential units, 2 single-family residential lots (for future residential development), an elementary school, a 10-acre park and two (2) retail centers, totaling 70,000 square feet (SF). In addition, a trail will be constructed just east and parallel to Honoapiilani Highway that will provide bike and pedestrian access to link the Project's development north and south of Mahinahina Gulch. The Project will be constructed in six (6) phases, but for purposes of this TIAR, will be analyzed as four (4) scenarios. See Table ES-1 for the land use breakdown and vehicle trips generated by each of the four (4) Project Scenarios.

Although it is not part of this TIAR, the Project envisions future expansion at the north end of the Project site (currently identified as 2 single-family residential lots) with an additional 302 residential units, bringing the total residential unit count to 1,200 residential units. Future traffic analysis and roadway mitigation measures will be assessed at a later date.

Table ES.1: Pulelehua Land Use Summary

Buildout Year	Project Scenario	Project Land Use	New Project Trips AM(PM)[Sat MD]
Future Year 2022	Scenario 1	- 240 Residential Units	89(125)[106]
	Scenario 2	- 240 Residential Units - 70,000 SF Retail	210(332)[666]
	Scenario 3	- 420 Residential Units - 10-acre Park	168(255)[257]
Future Year 2027	Scenario 4	- Elementary School (assumed 750-students)	312(101)[0]

Notes:
SF = Square feet

REPLY TO:
501 SUMNER STREET, SUITE 521 • HONOLULU, HAWAII 96817-5031
PHONE (808) 533-3646 • FAX (808) 526-1267
EMAIL : atahnl@atahawaii.com

OFFICES IN:
HONOLULU, HAWAII
WAILUKU, MAUI, HAWAII
HILO, HAWAII

Scenario 1 – Project's initial residential phase, north of Akahele Street. Direct access will be provided by two (2) new Project roadways, Road A and Road C, bisecting Akahele Street.

Scenario 2 - Residential and retail uses south of Akahele Street. Primary access to residential & retail components will be provided by Akahele Street. The north retail area will also be serviced by a proposed right-in, right-out (RIRO) access via Honoapiilani Highway.

Based on the developer forecast absorption for the retail component, approximately 15,000 SF of retail space will be occupied by Year 2022, with subsequent occupancy occurring at a pace of 5,000 SF of retail space every 2 years thereafter. Therefore, full build-out and occupancy will likely occur well beyond Year 2022, but was assumed to be fully built out by Year 2022 for this TIAR

Scenario 3 – Remaining residential spaces both north and south of Mahinahina Gulch and 10-acre park. Access will be provided by Akahele Street and a new Project roadway, Road J, intersecting Honoapiilani Highway south of Mahinahina Gulch.

Scenario 4 – Future DOE elementary school site, with access to be provided by Akahele Street. Since the development of the school is not in the direct controller of the Pulelehua development, the timeframe for this school has yet to be determined. For purposes of this TIAR, a forecast build-out of 2027 was assumed for the TIAR.

Existing and Base Year Traffic Analysis Without the Project

This TIAR evaluated existing conditions along Honoapiilani Highway at 11 major signalized intersections from Napilihau Street to Keawe Street. Existing traffic counts were taken in November and December 2016 during the weekday AM/PM and Saturday midday (MD) peak hours of traffic. Various intersections along the highway operate with either fixed coordinated signal timing plans or uncoordinated plans with lengthy through volume green times. As a result, numerous mainline left-turn movements and minor street approaches at various study intersections operate at LOS E/F conditions due to lengthy delays from the signal timing plans that favor the through movements along Honoapiilani Highway. Signal coordination is currently provided along Honoapiilani Highway between Leialii Parkway to Keawe Street.

As part of this TIAR, traffic was forecast to years 2022 and 2027 without the Project to constitute the Base Year (no build) scenarios. These buildout years coincide with the anticipated build-out years of the Project's Scenarios 1-4. By Base Year 2022 and 2027, numerous planned roadway improvements and nearby developments are anticipated to be completed within the Project study area and were included in the TIAR. By Base Year 2022 without the Project, traffic at the study intersections along Honoapiilani Highway is estimated to increase overall by approximately 10-30% on various parts of the corridor during the AM, PM and WE peak hours of traffic. All study intersections are forecast to operate similar to existing conditions. Overall intersection delays generally increased by only 1-5 seconds at most study intersections.

Table ES-2 summarizes the roadway improvements that are anticipated to occur by Base Years 2022 and 2027 without the Project.

Table ES.2: Roadway Improvements Summary WITHOUT Pulelehua

Buildout Year	Project Scenario	Intersection	Roadway Improvement
Planned Roadway Improvements (Without Project)	--	Lahaina Bypass Road	<u>Lahaina Bypass Road (LBR) Phase 1B-2</u> - Extend LBR from Hokiokio Place to its southern terminus with Honoapiilani Highway - Reroute all northbound traffic to use LBR instead of Honoapiilani Highway - Signalize and modify intersection laneage along LBR at its intersections with Kai Hele Ku Street and Hokiokio Place
		Honoapiilani Highway/ Keawe Street/ Lahaina Cannery Mall	- Construct an additional southbound left-turn lane, resulting in dual southbound left-turn lanes - Optimize signal timing plans along the coordinated corridor from Leialii Parkway to Keawe Street
		Honoapiilani Highway/ Napilihau Street	- Construct an exclusive right-turn lane on the northbound Honoapiilani Highway approach - Construct an exclusive left-turn lane and shared through/right-turn lane on the westbound Napilihau Street approach
Base Year 2022 (Without Project)	--	Honoapiilani Highway/ Kaanapali Parkway/ Halelo Street	- Construct an additional eastbound left-turn lane, resulting in a dedicated left-turn lane, shared left-turn/through lane and two (2) dedicated right-turn lanes
Base Year 2027 (Without Project)	--	--	- No roadway improvements recommended

Future Year Traffic Analysis With the Project

As mentioned above, Table ES-1 summarizes the Project's land use breakdown and vehicle trips generated by each of the four (4) Project Scenarios. In total, the Project's Scenarios 1-4 will generate 779(813)[1,029] new external vehicular trips during the AM(PM)[Sat MD] peak hours, respectively. The Project will increase both regional traffic and local (those providing direct access to the Project) traffic along Honoapiilani Highway with the following traffic percentile increases:

- Scenario 1 – Increase overall regional traffic by less than 5% and local traffic by less than 10% from Base Year 2022 conditions.
- Scenario 2 – Increase overall regional traffic by 5-15% and local traffic by 10-40% from Base Year 2022 conditions.
- Scenario 3 – Increase overall regional traffic by 5-20% and local traffic by 10-50% from Base Year 2022 conditions.
- Scenario 4 – With a new Elementary School in the Project site, many students will transfer to this site from the Kaanapali, Honokowai, Kahana, Napili and Kapalua regions. Trips generated by the new elementary school were rerouted from existing traffic along Honoapiilani Highway to the new site. As a result, the majority of traffic increases consisted of turning movement traffic into and out of Akahele Street on the east leg of its intersection with Honoapiilani Highway. Traffic reductions to various through movements along the highway were a result of the reroute.

Table ES-3 summarizes the roadway improvements that are anticipated to occur by Future Years 2022 and 2027 with the Project.

Table ES.3: Roadway Improvements Summary WITH Pulelehua

Buildout Year	Project Scenario	Intersection	Roadway Improvement
Future Year 2022 (With Project)	Scenario 1	--	- No additional roadway improvements recommended
	Scenario 2	Honoapiilani Highway/ Akahele Street [1]	- Optimize signal timing plan - Northbound left-turn lane → Lengthen lane to provide at least 275 feet of storage space - Southhbound left-turn lane → Lengthen lane to provide at least 275 feet of storage space - Westbound left-turn lane → Lengthen lane to provide at least 300 feet of storage space
		Honoapiilani Highway/ Project Retail Area North RIRO Access [1]	- Northbound right-turn lane → Provide a new right-turn with at least a 100 feet of storage space.
		Akahele Street @ Road A & Road C intersections	- Consider installing left-turn storage lanes along Akahele Street at Road A and Road C intersections
	Scenario 3	Honoapiilani Highway/ Road J (Project South Access) [1]	- Provide a median refuge lane along Honoapiilani Highway for westbound left-turn vehicles. - Northbound right-turn lane → Provide a new right-turn with at least a 100 feet of storage space - Southhbound left-turn lane → Provide a new left-turn with at least a 100 feet of storage space - Westbound left-turn lane → Provide a new right-turn with at least a 100 feet of storage space
Future Year 2027 (With Project)	Scenario 4	Honoapiilani Highway/ Kapunakea Street	- Consider restriping to provide exclusive eastbound left-turn lane and shared through/right-turn lane.

Notes:

1. Right-turn and left-turn lane lengths show required minimum storage space only. Additional taper length and/or deceleration length to be provided/verified upon intersection design. Based on AASHTO Green Book, 425 feet is recommended to accommodate full deceleration length with a design speed of 50 mph.

TABLE OF CONTENTS

Page

1. INTRODUCTION 1-4
   - 1.1 Location 1
   - 1.2 Project Description 1
2. METHODOLOGY 5
   - 2.1 Study Methodology 5
   - 2.2 Intersection Analysis 5
3. EXISTING CONDITIONS 6-13
   - 3.1 Roadway System 6
   - 3.2 Existing Traffic Volumes 7
   - 3.3 Existing Traffic Conditions Observations and Analysis 8
     - 3.3.1 Regional Analysis 8
     - 3.3.2 Existing Intersection Analysis 8
4. BASE YEAR TRAFFIC CONDITIONS 14-34
   - 4.1 Defacto Growth Rate 14
   - 4.2 Traffic Forecasts for Known Developments 14
     - 4.2.1 Background Projects 14
     - 4.2.2 Trip Generation 15
   - 4.3 Planned Roadway Improvements 19
   - 4.4 Base Year 2022 Analysis 19
     - 4.4.1 Base Year 2022 Intersection Analysis 20
     - 4.4.2 Base Year 2022 With Mitigation Intersection Analysis 20
   - 4.5 Base Year 2027 Analysis 28
     - 4.5.1 Base Year 2027 Intersection Analysis 28

TABLE OF CONTENTS
Cont'd

Page

5. FUTURE YEAR SCENARIOS 35-76
5.1 Background 35
5.1.1 Travel Demand Estimations 36
5.1.2 Trip Generation 36
5.1.3 Trip Distribution and Assignment 36
5.2 Future Year 2022 Scenario 1 Analysis 39
5.2.1 Future Year 2022 Scenario 1 Intersection Analysis 39
5.3 Future Year 2022 Scenario 2 Analysis 48
5.3.1 Future Year 2022 Scenario 2 Intersection Analysis 48
5.4 Future Year 2022 Scenario 3 Analysis 59
5.4.1 Future Year 2022 Scenario 3 Intersection Analysis 59
5.5 Future Year 2027 Scenario 4 Analysis 68
5.5.1 Future Year 2027 Scenario 4 Intersection Analysis 68
6. CONCLUSIONS 77-82
6.1 Existing Conditions 78
6.2 Base Year 2022 78
6.3 Base Year 2022 With Mitigation 78
6.4 Base Year 2027 79
6.5 Future Year 2022 Scenario 1 79
6.6 Future Year 2022 Scenario 2 80
6.7 Future Year 2022 Scenario 3 80
6.8 Future Year 2027 Scenario 4 81

TABLE OF CONTENTS
Cont'd

Page

7. RECOMMENDATIONS 83-84

7.1 Planned Roadway Improvements 83

7.2 Base Year 2022 Mitigation 83

7.3 Future Year 2022 Scenario 2 Mitigation 83

7.4 Future Year 2022 Scenario 3 Mitigation 84

7.5 Future Year 2027 Scenario 4 Mitigation 84

8. REFERENCES 85

TABLE OF CONTENTS
Cont'd

Page

TABLES

3.1 EXISTING CONDITIONS LEVEL OF SERVICE SUMMARY 12

4.1 BACKGROUND PROJECTS TRIP GENERATION RATES 17

4.2 BACKGROUND PROJCETS TRIP GENERATION 18

4.3 EXISTING CONDITIONS, BASE YEAR 2022 AND BASE YEAR 2022 WITH MITIGATION LEVEL OF SERVICE SUMMARY 25

4.3 BASE YEAR 2022 WITH MITIGATION AND BASE YEAR 2027 LEVEL OF SERVICE SUMMARY 31

5.1 TRIP GENERATION RATES 37

5.2 PROJECT-GENERATED TRIPS 38

5.3 FUTURE YEAR 2022 (SCENARIO 1) LEFT-TURN STORAGE LANE LENGTH CALCULATIONS 44

5.4 BASE YEAR 2022 WITH MITIGATION AND FUTURE YEAR 2022 SCENARIO 1 LEVEL OF SERVICE SUMMARY 45

5.5 FUTURE YEAR 2027 (FULL PULELEHUA BUILD-OUT WITH SCHOOL) LEFT-TURN STORAGE LANE LENGTH CALCULATIONS 55

5.6 BASE YEAR 2022 WITH MITIGATION, FUTURE YEAR 2022 SCENARIO 1 AND FUTURE YEAR 2022 SCENARIO 2 LEVEL OF SERVICE SUMMARY 56

5.7 BASE YEAR 2022, FUTURE YEAR 2022 SCENARIO 2 AND FUTURE YEAR 2022 SCENARIO 3 LEVEL OF SERVICE SUMMARY 65

5.8 BASE YEAR 2027, FUTURE YEAR 2022 SCENARIO 3 AND FUTURE YEAR 2027 SCENARIO 4 LEVEL OF SERVICE SUMMARY 74

FIGURES

1.1 LOCATION MAP 3

1.2 SITE PLAN 4

3.1 EXISTING LANE CONFIGURATION, VOLUMES AND LOS 10

4.1 BACKGROUND PROJECTS 16

TABLE OF CONTENTS
Cont'd

		Page
4.2	BASE YEAR 2022 LANE CONFIGURATION, VOLUMES AND LOS	21
4.3	BASE YEAR 2022 WITH MITIGATION LANE CONFIGURATION, VOLUMES AND LOS	23
4.4	BASE YEAR 2027 LANE CONFIGURATION, VOLUMES AND LOS	29
5.1	YEAR 2022 SCENARIO 1 PROJECT-GENERATED TRAFFIC	40
5.2	FUTURE YEAR 2022 SCENARIO 1 LANE CONFIGURATION, VOLUMES AND LOS.....	42
5.3	YEAR 2022 SCENARIO 2 PROJECT-GENERATED TRAFFIC	50
5.4	FUTURE YEAR 2022 SCENARIO 2 LANE CONFIGURATION, VOLUMES AND LOS.....	52
5.5	FUTURE YEAR 2022 SCENARIO 2 AKAHELE STREET LANE CONFIGURATION, VOLUMES AND LOS.....	54
5.6	YEAR 2022 SCENARIO 3 PROJECT-GENERATED TRAFFIC	61
5.7	FUTURE YEAR 2022 SCENARIO 3 LANE CONFIGURATION, VOLUMES AND LOS.....	63
5.8	YEAR 2027 SCENARIO 4 PROJECT-GENERATED TRAFFIC	70
5.9	FUTURE YEAR 2027 SCENARIO 4 LANE CONFIGURATION, VOLUMES AND LOS.....	72

TABLE OF CONTENTS
Cont'd

APPENDICES

A. TRAFFIC COUNT DATA

B. LEVEL OF SERVICE CRITERIA

C. LEVEL OF SERVICE CALCULATIONS

D. ROADWAY IMPROVEMENTS PLAN

E. TRAFFIC SIGNAL WARRANT

AUSTIN, TSUTSUMI & ASSOCIATES, INC. CIVIL ENGINEERS • SURVEYORS
CONTINUING THE ENGINEERING PRACTICE FOUNDED BY H. A. R. AUSTIN IN 1934

TERRANCE S. ARASHIRO, P.E.
ADRIENNE W.L.H. WONG, P.E., LEED AP
DEANNA M.R. HAYASHI, P.E.
PAUL K. ARITA, P.E.
ERIK S. KANESHIRO, L.P.L.S, LEED AP
MATT K. NAKAMOTO, P.E.
GARRETT K. TOKUOKA, P.E.

ADRIENNE W.L.H. WONG, P.E., LEED AP
Maui Branch Manager

TRAFFIC IMPACT ANALYSIS REPORT

PULELEHUA DEVELOPMENT

Lahaina, Maui, Hawaii

1. INTRODUCTION

This report documents the findings of a traffic study conducted by Austin, Tsutsumi & Associates, Inc. (ATA) to evaluate the potential traffic impacts resulting from the proposed Pulelehua Development (hereinafter referred to as the "Project").

1.1 Location

The Project is located upon approximately 304.255 acres of undeveloped land in Lahaina on the island of Maui. The Project will be bounded by Honoapiilani Highway to the west and the Kapalua Airport to the east. See Figure 1.1 for the Project location.

1.2 Project Description

A Traffic Impact Analysis Report (TIAR) was completed for the Project in October 2008 and updated in May 2009. Since 2009, the Project's site plan has undergone some modifications and currently proposes to develop approximately 304.255 acres of land to provide 898 multi-family (MF) residential units, 2 single-family residential lots (for future residential development), an elementary school, a 10-acre park and two (2) retail centers, totaling 70,000 square feet (SF). In addition, a trail will be constructed just east and parallel to Honoapiilani Highway that will provide bike and pedestrian access to link the Project's development north and south of Mahinahina Gulch. The Project will be constructed in six (6) phases, but for purposes of this TIAR, will be analyzed as four (4) scenarios.

Although it is not part of this TIAR, the Project envisions future expansion at the north end of the Project site (currently identified as 2 single-family residential lots) with an additional 302 residential units, bringing the total residential unit count to 1,200 residential units. Future traffic analysis and roadway mitigation measures will be assessed at a later date.

Figure 1.2 shows the Project site plan.

<u>Scenario 1</u> – Develop Phase 1 with a build-out of early 2022 that includes the following:

REPLY TO:
501 SUMNER STREET, SUITE 521 • HONOLULU, HAWAII 96817-5031
PHONE (808) 533-3646 • FAX (808) 526-1267
EMAIL : atahnl@atahawaii.com

OFFICES IN:
HONOLULU, HAWAII
WAILUKU, MAUI, HAWAII
HILO, HAWAII

- 240 MF residential units north of Akahele Street, with direct access provided by two (2) new Project roadways, Road A and Road C, bisecting Akahele Street.

Scenario 2 - Develop Phase 2 and Retail component with a build-out of early 2022 that includes the following:

- 240 MF residential units south of Akahele Street with direct access provided by Road A and Road C.
- Retail Area North consisting of 50,000 square feet (SF) of space located on the northeast corner of the Honoapiilani Highway/Akahele Street intersection.
- Retail Area South consisting of 20,000 SF of space located adjacent to Retail Area North on the southeast corner of the Honoapiilani Highway/Akahele Street intersection.
    - Access to Retail Area North and South will be provided by Road A. Retail Area North will also be serviced by a right-in, right-out (RIRO) access via Honoapiilani Highway.
    - Based on the developer forecast absorption for the Retail Area North and South component, approximately 15,000 SF of retail space will be occupied by Year 2022, with subsequent occupancy occurring at a pace of 5,000 SF of retail space every 2 years thereafter. Therefore, full build-out and occupancy of Retail Areas North and South will likely occur well beyond Year 2022, but was assumed to be fully built out by Year 2022 for this TIAR.

Scenario 3 – Develop Phases 3-5 with a build-out of late 2022 that include the following:

- 100 MF residential units (Phase 3) south of Akahele Street, with access provided by Road C.
- 318 MF residential units (Phase 3 and Phase 4) south of Mahinahina Gulch, with access provided by a new Project roadway, Road J, intersecting Honoapiilani Highway south of Mahinahina Gulch.
- 2 single-family residential lots north of Akahele Street, with access provided by Road A and Road C.
- 10-acre park with two (2) practice fields south of Mahinahina Gulch, with access provided by Road J.

Scenario 4 – A future elementary school, to be planned/developed by the Department of Education (DOE). Since the development of the school is not in the direct controller of the Pulelehua development, the timeframe for this school has yet to be determined. For purposes of this TIAR, a forecast build-out of 2027 was assumed for the TIAR.

- 750-student elementary school, with access provided by Road A.

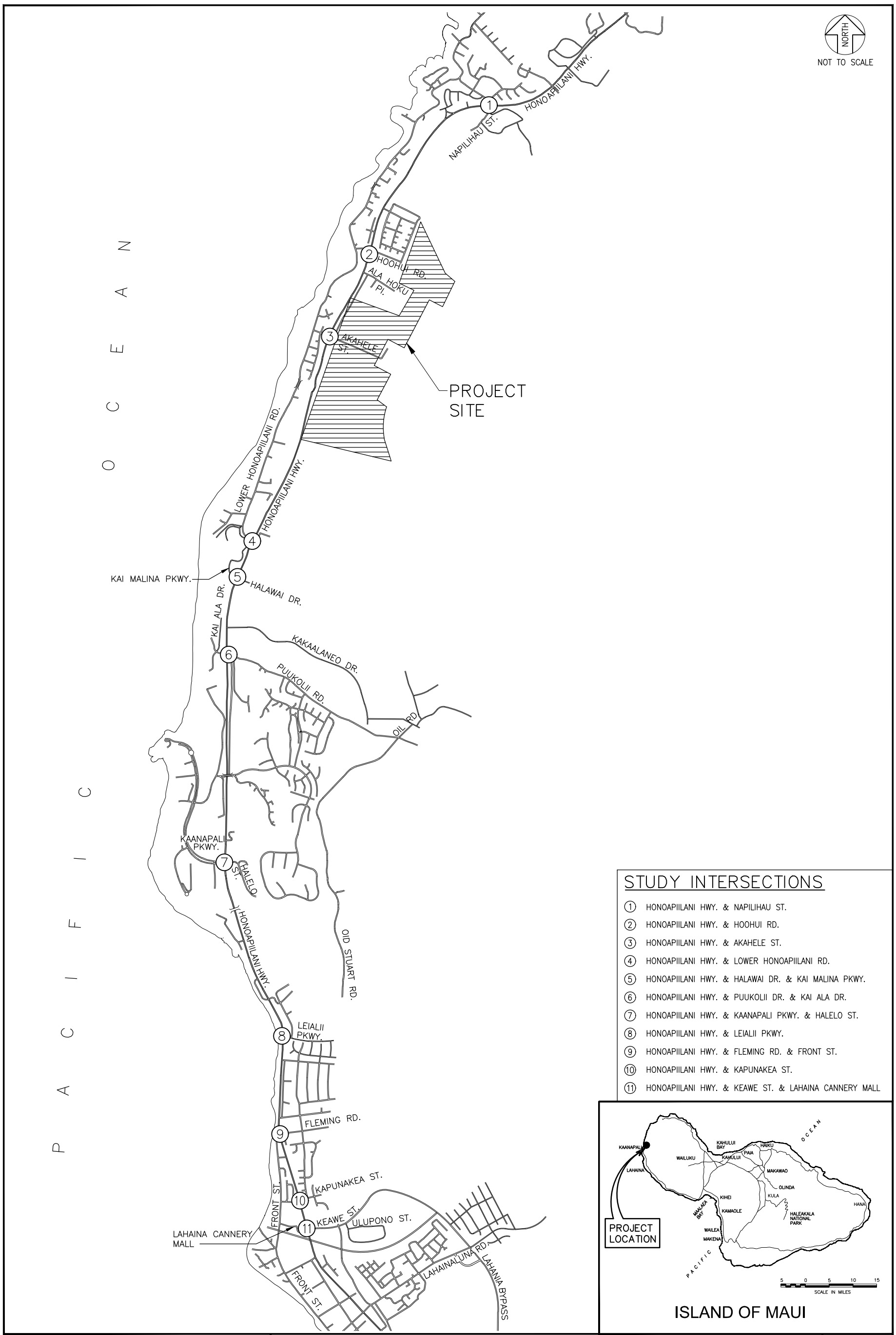

PULELEHUA

AUSTIN, TSUTSUMI & ASSOCIATES, INC.
ENGINEERS, SURVEYORS • HONOLULU, HAWAII

LOCATION MAP

FIGURE 1.1

PULELEHUA

AUSTIN, TSUTSUMI & ASSOCIATES, INC.
ENGINEERS, SURVEYORS • HONOLULU, HAWAII

SITE PLAN

FIGURE 1.2

2. METHODOLOGY

2.1 Study Methodology

This study will address the following:

- Assess existing traffic operating conditions at key intersections during the weekday morning (AM) and afternoon (PM) and Saturday midday (WE) peak hours of traffic within the study area.
- Traffic projections for Base Year 2022 and 2027 (without the Project) including traffic generated by other known developments in the vicinity of the Project in addition to an ambient growth rate. These other known developments are projects that are currently under construction or known new/future developments that are anticipated to affect traffic demand and operations within the study area.
- Trip generation and traffic assignment characteristics for the proposed Project.
- Traffic projections for Future Year 2022 (with the Project Scenario 1, 2 and 3) and Future Year 2027 (with the Project Scenario 4), which includes Base Year traffic volumes in addition to traffic volumes generated by the four (4) Project scenarios.
- Recommendations for Base Year and Future Year roadway improvements or other mitigative measures, as appropriate, to reduce or eliminate the adverse impacts resulting from traffic generated by known developments in the region or the Project.

2.2 Intersection Analysis

Level of Service (LOS) is a qualitative measure used to describe the conditions of traffic flow at intersections, with values ranging from free-flow conditions at LOS A to congested conditions at LOS F. The Highway Capacity Manual (HCM), dated 2010, includes methods for calculating volume to capacity ratios, delays, and corresponding Levels of Service that were utilized in this study. LOS definitions for signalized and unsignalized intersections are provided in Appendix B.

Analyses for the study intersections were performed using the traffic analysis software Synchro, which is able to prepare reports based on the methodologies described in the HCM. These reports contain control delay results as based on intersection lane geometry, signal timing, and hourly traffic volumes. Based on the vehicular delay at each intersection, a LOS is assigned to each approach and intersection movement as a qualitative measure of performance. These results, as confirmed or refined by field observations, constitute the technical analysis that will form the basis of the recommendations outlined in this report.

3. EXISTING CONDITIONS

3.1 Roadway System

The following are brief descriptions of the existing roadways in the vicinity of the Project:

Honoapiilani Highway – is a State highway that provides regional connection for the majority of West Maui. Honoapiilani Highway begins in Wailuku where it transitions from South High Street and continues southward toward Maalaea. The highway borders the coastline as it curves back around West Maui and northward again toward Kapalua, where it transitions into Kahekili Highway near Honokohau Bay. In the vicinity of the Project, Honoapiilani Highway is generally a two-way, two-lane undivided road with a posted speed limit of 45 miles per hour (mph) in the vicinity of the Project.

Napilihau Street – is a roadway that provides access to businesses and residential areas. The roadway begins to the northwest at its intersection with Lower Honoapiilani Road and travels southeast to Honoapiilani Highway before terminating to the southwest at Maui Preparatory Academy. In the vicinity of the Project, Napilihau Street is generally a two-way, one-lane undivided road with a posted speed limit of 20 mph.

Hoohui Road – is a roadway that provides access to businesses and residential areas. The roadway begins to the west at its intersection with Lower Honoapiilani Road and terminates to the east at its intersection with Kahana Ridge Drive. West of its intersection with Honoapiilani Highway, Hoohui Road is a two-way, one-lane undivided road with a speed limit of 20 mph. East of its intersection with Honoapiilani Highway, Hoohui Road is a two-way, two-lane undivided road with a posted speed limit of 25 mph.

Akahele Street – is a roadway that provides access to residential areas and the Kapalua Airport. The roadway begins to the west at its intersection with Lower Honoapiilani Road and terminates to the east at the Kapalua Airport. In the vicinity of the Project, Akahele Street is a two-way, one-lane undivided road with a posted speed limit of 30 mph.

Lower Honoapiilani Road – is a County collector that provides access to hotels, businesses and residential areas. The roadway begins at its intersection with Honoapiilani Highway and runs north parallel to the highway and the coast before terminating at its intersection with Office Road near the Kapalua Golf Course. In the vicinity of the Project, Lower Honoapiilani Road is generally a two-way, one-lane undivided road with a posted speed limit of 20 mph.

Halawai Drive/Kai Malina Parkway – is a roadway that provides access to various businesses and hotels. Halawai Drive is a roadway east of Honoapiilani Highway and Kai Malina Parkway is a roadway west of the highway, servicing Honua Kai Resort and Spa.

Puukolii Road – is a roadway that provides access to residential areas. The roadway begins to the west at its intersection with Honoapiilani Highway and terminates to the southeast at its intersection with Oil Road. In the vicinity of the Project, Puukolii Road is a two-way, one-lane undivided road with a posted speed limit of 30 mph.

Kai Ala Drive – is a County roadway that begins to the east at its intersection with Hononapiilani Highway and travels west to provide access to Kahekili Beach Park and several hotels. In the vicinity of the Project, Kai Ala Drive is a two-way, one-lane divided road.

Kaanapali Parkway – is a roadway that provides access to various hotels and businesses. The roadway begins to the east at its intersection with Honoapiilani Highway and travels northwest before terminating near the Royal Kaanapali Golf Course. In the vicinity of the Project, Kaanapali Parkway is a two-way, two-lane divided road.

Halelo Street – is a roadway that provides access to residential areas. The roadway begins to the west at its intersection with Honoapiilani Highway and travels southeast before terminating. In the vicinity of the Project, Halelo Street is a two-way, one-lane undivided road.

Leialii Parkway – is a collector road that provides access to residential areas, civic center and the post office. The roadway begins to the west at its intersection with Honoapiilani Highway and terminates to the east. In the vicinity of the Project, Leialii Parkway is a two-way, one-lane undivided road with a posted speed limit of 25 mph.

Fleming Road – is a roadway that provides access to residential areas. The roadway begins to the west at its intersection with Honoapiilani Highway and terminates to the east. In the vicinity of the Project, Fleming Road is a two-way, one-lane unidivided road with a posted speed limit of 20 mph.

Front Street – is a County collector road that provides access to businesses and residential areas. The roadway begins to the south at its intersection with Honoapiilani Highway just north of Hokiokio Place. The road then travels north parallel to the coast and the highway before reconnecting with Honoapiilani Highway at Fleming Road. In the vicinity of the Project, Front Street is a two-way, one-lane undivided road with a posted speed limit of 20 mph.

Kapunakea Road – is a roadway that provides access to businesses and residential areas. The roadway begins to the west at its intersection with Front Street and terminates to the east past its intersection with Honoapiilani Highway. West of its intersection with Honoapiilani Highway, Kapunakea Road is a two-way, two-lane undivided roadway. East of its intersection with Honoapiilani Highway, Kapunakea Road is a two-way, one-lane undivided roadway.

Keawe Street – is a County collector road that provides access to businesses and residential areas. The roadway begins to the west at its intersection with Honoapiilani Highway and terminates to the east at its intersection with Lahaina Bypass Road. In the vicinity of the Project, Keawe Street is a two-way, two-lane divided roadway.

3.2 Existing Traffic Volumes

The AM peak hour turning movement data utilized in this report were collected on December 1, 2016 and December 7, 2016. The PM peak hour turning movement data were collected on November 30, 2016 and December 6, 2016. The WE hourly turning movement data were collected on December 10, 2016. Based on the proximity to the proposed Project site, the following intersections were studied in the existing conditions scenario.

- [1] Honoapiilani Highway/Napilihau Street (signalized)
- [2] Honoapiilani Highway/Hoohui Road (signalized)
- [3] Honoapiilani Highway/Akahele Street (signalized)
- [4] Honoapiilani Highway/Lower Honoapiilani Road (signalized)
- [5] Honoapiilani Highway/Halawai Drive/Kai Malina Parkway (signalized)

- [6] Honoapiilani Highway/Puukolii Road/Kai Ala Drive (signalized)
- [7] Honoapiilani Highway/Kaanapali Parkway/Halelo Street (signalized)
- [8] Honoapiilani Highway/Leialii Parkway (signalized)
- [9] Honoapiilani Highway/Fleming Road/Front Street (signalized)
- [10] Honoapiilani Highway/Kapunakea Road (signalized)
- [11] Honoapiilani Highway/Keawe Street/Lahaina Cannery Mall (signalized)

Based on the count data, it was determined that the weekday AM peak hour of traffic occurs between 7:15 AM and 8:15 AM, the weekday PM peak hour of traffic occurs between 3:45 PM and 4:45 PM, and the Saturday WE peak hour of traffic occurs between 11:30 AM and 12:30 PM. The turning movement count data is included in Appendix A.

3.3 Existing Traffic Conditions Observations and Analysis

3.3.1 Regional Analysis

Honoapiilani Highway generally operates as a two (2) lane highway from Napilihau Street to Lower Honoapiilani Road and continues south as a four (4) lane highway from Lower Honoapiilani Road to beyond Keawe Street. As discussed in Section 3.3.2 below, various intersections along the highway operate with either fixed coordinated signal timing plans or uncoordinated plans with lengthy through volume green times. As a result, numerous mainline left-turn movements and minor street approaches at various study intersections operate at LOS E/F conditions due to lengthy delays from the signal timing plans that favor the through movements along Honoapiilani Highway. However, with the exception of the southbound left-turn movement at the Honoapiilani Highway/Keawe Street intersection described below, all vehicular movements at each study intersection operate adequately with under-capacity conditions. Signal coordination is currently provided along Honoapiilani Highway between Leialii Parkway to Keawe Street.

3.3.2 Existing Intersection Analysis

The observations and analysis described below are based on prevailing observations during the time at which the data was collected. Hereinafter, observations that are expressed as ongoing and current shall represent the conditions that prevailed at the time at which the data was collected. All movements at the study intersection generally operated adequately at LOS D or better and under-capacity conditions, except for the following:

<u>[1] Honoapiilani Highway/Napilihau Street</u>

This intersection operated at overall LOS B during all peak hours of traffic. However, the southbound left-turn movement experienced LOS F during the AM and PM peak hours due to low left-turn turning volumes (≤ 10 vehicles) and long cycle length.

<u>[3] Honoapiilani Highway/Akahele Street</u>

This intersection operated at overall LOS B during all peak hours of traffic. However, various left-turn movements operated at LOS E/F during all peak hours of traffic due to low left-turn turning volumes (≤ 10 vehicles) and long cycle length.

[4] Honoapiilani Highway/Lower Honoapiilani Road

This intersection operated at overall LOS B during all peak hours of traffic. However, the southbound left-turn movement experienced LOS E during the PM peak hour due to a low left-turn turning volume (1 vehicle) and long cycle length. Observations indicate the northbound left-turn movement would occasionally queue beyond its storage length. However, due to a long northbound left-turn signal phase, most vehicles would clear within a single signal cycle.

[5] Honoapiilani Highway/Kai Malina Parkway/Halawai Drive

This intersection operated at overall LOS A during all peak hours of traffic. However, the southbound left-turn movement experienced LOS E during the PM peak hour due to a low left-turn turning volume (8 vehicles) and long cycle length.

[6] Honoapiilani Highway/Puukolii Road/Kai Ala Drive

This intersection operated at overall LOS B during all peak hours of traffic. However, various major street left-turn movements and minor street approaches operated at LOS E/F during the AM and PM peak hours due to fixed signal cycle lengths from the weekday signal coordination.

[7] Honoapiilani Highway/Kaanapali Parkway/Halelo Street

This intersection operated at overall LOS D or better during all peak hours of traffic. All mainline through movements operated at LOS D or better at under-capacity conditions. Numerous major street left-turn movements and minor street approaches operate at LOS E/F conditions during the PM peak hour due to lengthy delays as a result of the through movement green time that can provide over 200 seconds per cycle. However, observations indicated that the through signal phase would often gap out prior to reaching its maximum through movement timing.

[8-10] Honoapiilani Highway from Leialii Parkway to Kapunakea Street

All intersections along this stretch are coordinated during all peak hours of traffic and operated at overall LOS B or better. Various major street left-turn movements and minor street approaches operated at LOS E/F during the AM and PM peak hours due to fixed signal cycle lengths from the signal coordination timing plans.

[11] Honoapiilani Highway/Keawe Street/Lahaina Cannery Mall

This intersection is also coordinated with the above three (3) intersections and operated at overall LOS D or better during all peak hours of traffic. However, the southbound left-turn operated at LOS F and over-capacity during the PM peak hour. Observations indicated the southbound left-turn movement can queue beyond its storage lane and require two signal cycle lengths to clear. This intersection currently serves as the northern terminus connection to Honoapiilani Highway to/from the Lahaina Bypass Road.

Figure 3.1 illustrates the existing lane configurations, volumes and LOS. See Table 3.1 for a summary of the existing conditions analysis.

LEGEND

AA(AA)[AA] – AM(PM)[WE] PEAK HOUR OF TRAFFIC VOLUMES

X(X)[X] – AM(PM)[WE] LOS

Y – SIGNALIZED INTERSECTION Y, OVERALL AM/PM/WE LOS (X/X/X)

NOTE:
THIS DRAWING IS FOR ILLUSTRATIVE PURPOSES ONLY. DO NOT USE FOR CONSTRUCTION.

DATE OF COUNTS:
November 30, 2016
December 1, 2016
December 6, 2016
December 7, 2016
December 10, 2016
January 21, 2017

AM PEAK HOUR:
7:15 AM – 8:15 AM

PM PEAK HOUR:
3:45 PM – 4:45 PM

WE PEAK HOUR:
11:30 WE – 12:30 WE

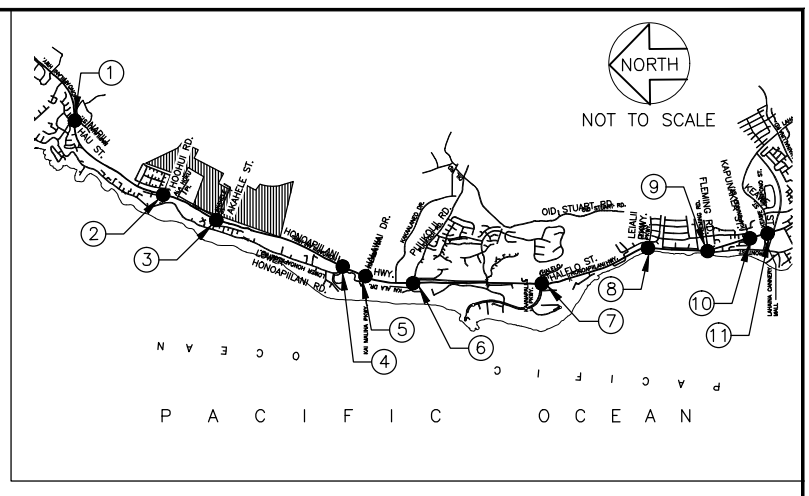

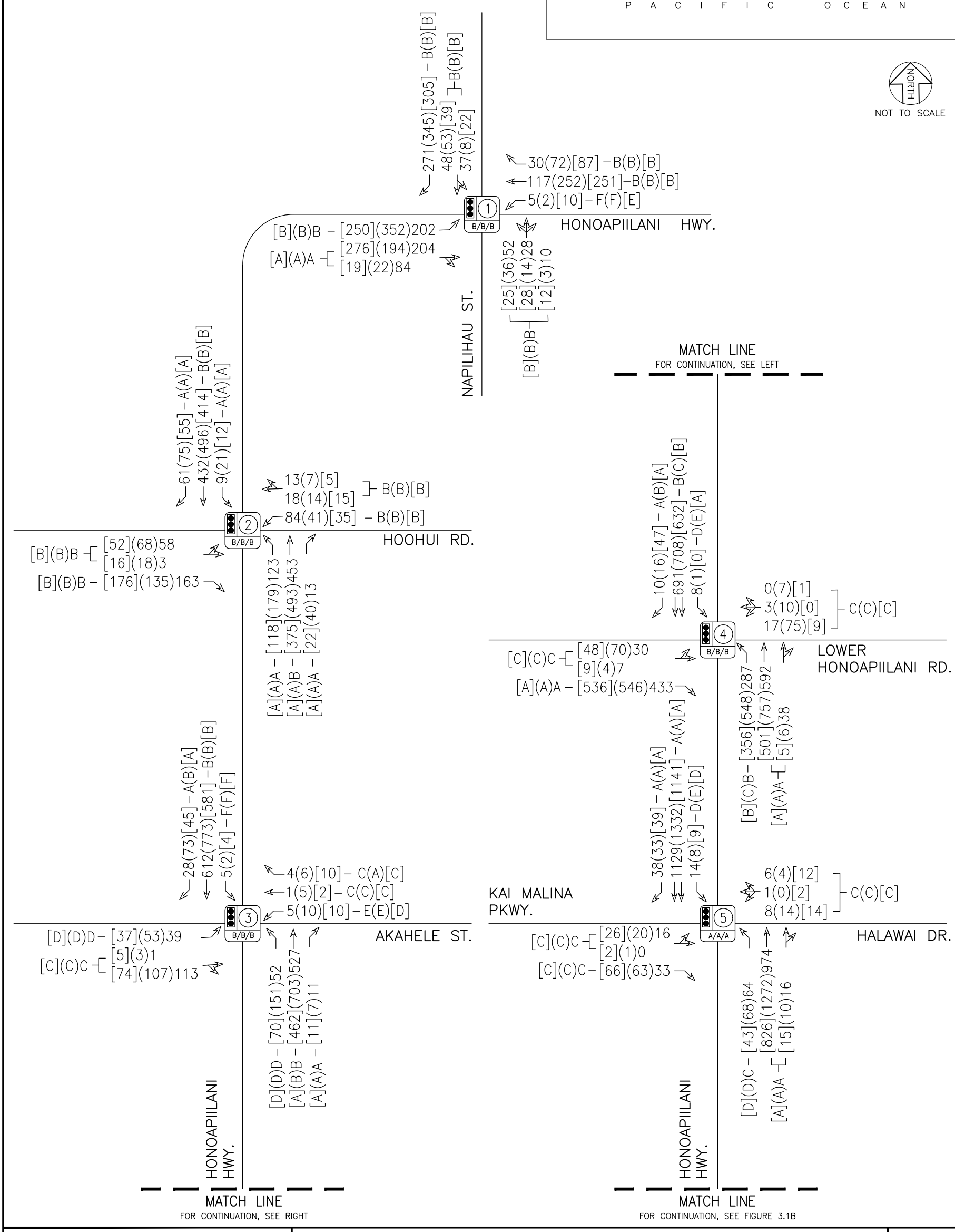

PULELEHUA	AUSTIN, TSUTSUMI & ASSOCIATES, INC. ENGINEERS, SURVEYORS • HONOLULU, HAWAII	FIGURE
	EXISTING LANE CONFIGURATION, VOLUMES AND LOS	3.1A

LEGEND

AA(AA)[AA] – AM(PM)[WE] PEAK HOUR OF TRAFFIC VOLUMES

X(X)[X] – AM(PM)[WE] LOS

Y – SIGNALIZED INTERSECTION Y, OVERALL AM/PM/WE LOS

NOTE:
THIS DRAWING IS FOR ILLUSTRATIVE PURPOSES ONLY. DO NOT USE FOR CONSTRUCTION.

DATE OF COUNTS:
November 30, 2016
December 1, 2016
December 6, 2016
December 7, 2016
December 10, 2016
January 21, 2017

AM PEAK HOUR:
7:15 AM – 8:15 AM

PM PEAK HOUR:
3:45 PM – 4:45 PM

WE PEAK HOUR:
11:30 WE – 12:30 WE

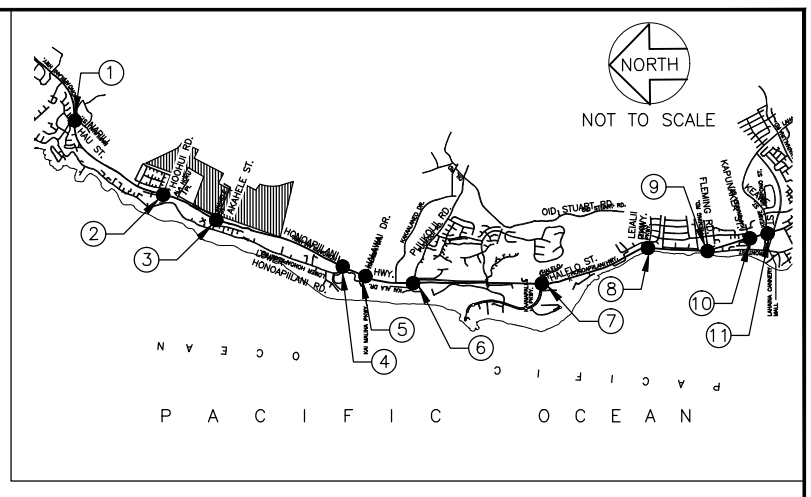

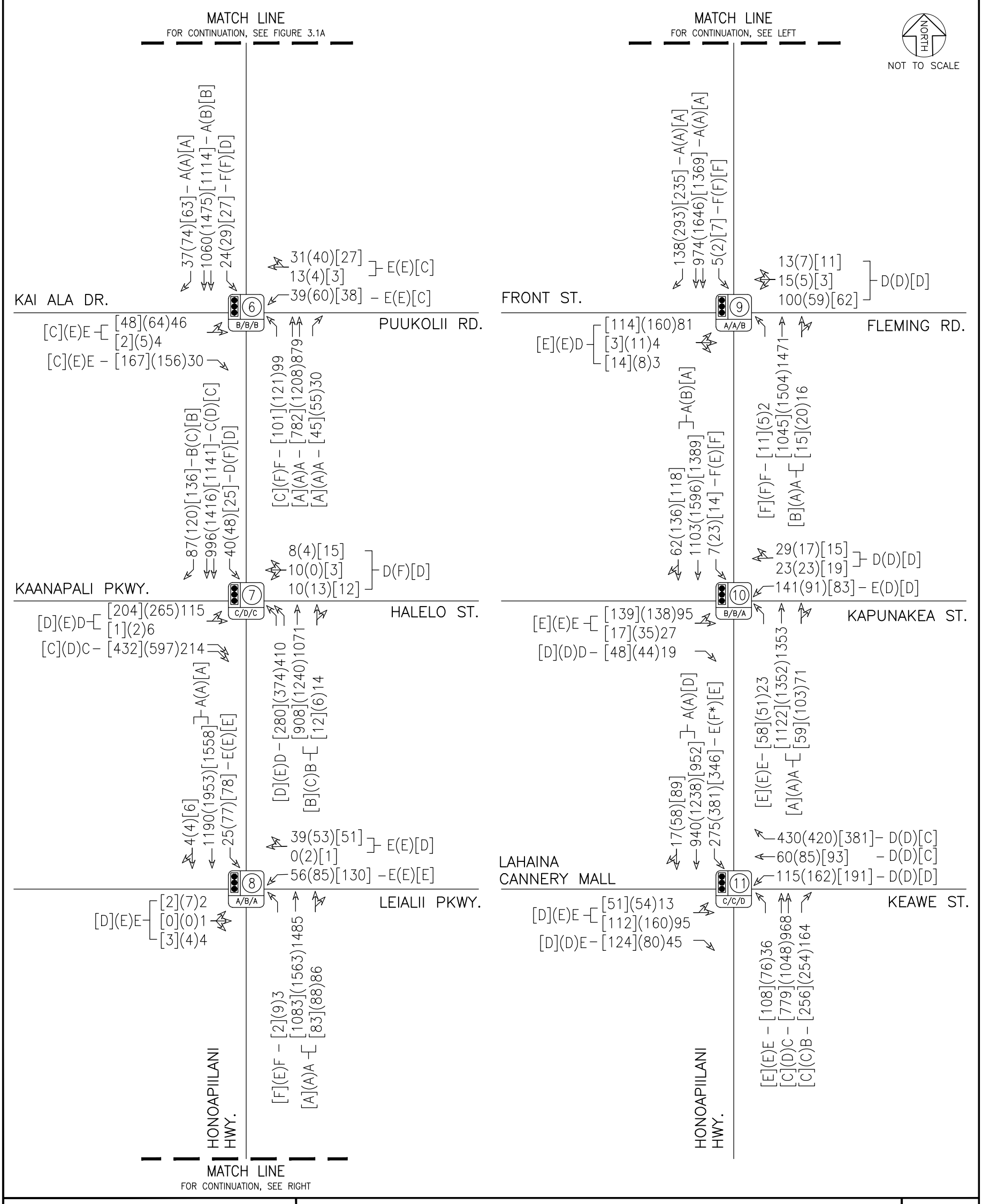

PULELEHUA

AUSTIN, TSUTSUMI & ASSOCIATES, INC.
ENGINEERS,SURVEYORS • HONOLULU,HAWAII

EXISTING LANE CONFIGURATION, VOLUMES AND LOS

FIGURE
3.1B

Table 3.1: Existing Conditions Level of Service Summary

Intersection	Existing Conditions								
	AM			PM			WE		
	HCM Delay	v/c Ratio	LOS	HCM Delay	v/c Ratio	LOS	HCM Delay	v/c Ratio	LOS
1: Honoapiilani Highway & Napilihau Street									
NB LT	18.5	0.74	B	18.3	0.80	B	18.3	0.76	B
NB TH/RT	8.1	0.39	A	6.0	0.24	A	7.4	0.37	A
EB LT/TH	14.9	0.23	B	18.4	0.20	B	16.2	0.19	B
EB RT	14.5	0.16	B	18.0	0.13	B	16.1	0.15	B
WB LT/TH/RT	15.5	0.28	B	18.5	0.19	B	16.2	0.19	B
SB LT	97.0	0.69	F	95.1	0.50	F	67.1	0.72	E
SB TH	11.5	0.26	B	16.6	0.57	B	14.2	0.53	B
SB RT	10.3	0.02	B	12.5	0.05	B	10.9	0.07	B
Overall	13.5	-	B	15.2	-	B	14.0	-	B
2: Honoapiilani Highway & Hoohui Road									
NB LT	8.8	0.30	A	8.0	0.41	A	8.0	0.28	A
NB TH	10.4	0.61	B	8.6	0.60	A	8.8	0.53	A
NB RT	0.0	0.00	A	0.0	0.00	A	0.0	0.00	A
EB LT/TH	15.4	0.16	B	17.8	0.28	B	14.5	0.19	B
EB RT	14.6	0.07	B	16.6	0.06	B	14.0	0.09	B
WB LT	17.6	0.25	B	19.5	0.17	B	15.6	0.11	B
WB TH/RT	14.5	0.06	B	16.6	0.07	B	13.9	0.06	B
SB LT	9.6	0.03	A	7.8	0.05	A	8.0	0.03	A
SB TH	14.2	0.73	B	12.3	0.73	B	11.9	0.69	B
SB RT	9.6	0.05	A	7.9	0.05	A	8.2	0.04	A
Overall	12.4	-	B	10.9	-	B	10.6	-	B
3: Honoapiilani Highway & Akahele Street									
NB LT	42.1	0.79	D	36.4	0.78	D	35.4	0.77	D
NB TH	10.8	0.64	B	11.6	0.71	B	9.9	0.56	A
NB RT	7.0	0.01	A	6.3	0.01	A	6.9	0.01	A
EB LT	36.9	0.68	D	49.2	0.78	D	36.0	0.66	D
EB TH/RT	20.3	0.07	C	27.1	0.05	C	20.3	0.05	C
WB LT	64.3	0.53	E	59.3	0.56	E	46.2	0.55	D
WB TH	21.4	0.01	C	29.0	0.03	C	21.2	0.01	C
WB RT	21.4	0.01	C	0.0	0.00	A	21.2	0.01	C
SB LT	106.1	0.70	F	114.5	0.40	F	117.6	0.70	F
SB TH	14.3	0.80	B	19.4	0.85	B	14.3	0.79	B
SB RT	8.1	0.02	A	10.6	0.05	B	8.4	0.03	A
Overall	15.2	-	B	18.7	-	B	15.0	-	B
4: Honoapiilani Highway & Lower Honoapiilani Road									
NB LT	19.3	0.80	B	24.5	0.91	C	18.5	0.83	B
NB TH/RT	4.8	0.31	A	4.4	0.32	A	2.6	0.21	A
EB LT/TH	21.2	0.15	C	32.3	0.31	C	22.4	0.24	C
EB RT	0.0	0.00	A	0.0	0.00	A	0.0	0.00	A
WB LT/TH/RT	20.8	0.08	C	33.1	0.39	C	21.2	0.04	C
SB LT	48.5	0.72	D	74.6	0.42	E	0.0	0.00	A
SB TH	11.7	0.53	B	21.8	0.64	C	12.9	0.53	B
SB RT	8.7	0.00	A	16.1	0.01	B	10.0	0.03	A
Overall	10.9	-	B	17.2	-	B	11.2	-	B
5: Honoapiilani Highway & Kai Malina Parkway/Halawai Drive									
NB LT	29.7	0.79	C	38.4	0.78	D	36.3	0.82	D
NB TH/RT	4.3	0.44	A	6.5	0.56	A	4.9	0.39	A
EB LT/TH	23.4	0.08	C	28.3	0.08	C	22.8	0.11	C
EB RT	23.7	0.02	C	28.4	0.01	C	22.8	0.01	C
WB LT/TH/RT	23.9	0.06	C	28.7	0.06	C	22.7	0.07	C
SB LT	43.5	0.75	D	62.5	0.74	E	50.5	0.73	D
SB TH	5.5	0.54	A	8.4	0.64	A	6.3	0.56	A
SB RT	3.4	0.03	A	4.7	0.02	A	3.9	0.03	A
Overall	6.1	-	A	8.7	-	A	6.9	-	A
6: Honoapiilani Highway & Kai Ala Drive/Puukolii Road									
NB LT	84.5	0.84	F	86.0	0.86	F	33.8	0.77	C
NB TH	5.0	0.37	A	7.6	0.48	A	8.0	0.41	A
NB RT	3.4	0.04	A	4.7	0.04	A	6.0	0.03	A
EB LT/TH	69.2	0.33	E	68.2	0.35	E	24.5	0.15	C
EB RT	64.5	0.01	E	64.1	0.02	E	24.0	0.07	C
WB LT	75.0	0.38	E	77.8	0.49	E	26.7	0.14	C
WB TH/RT	65.3	0.10	E	64.2	0.02	E	23.8	0.02	C
SB LT	82.7	0.67	F	90.9	0.77	F	35.3	0.53	D
SB TH	8.2	0.44	A	13.3	0.58	B	12.0	0.64	B
SB RT	5.3	0.02	A	7.7	0.06	A	7.6	0.04	A
Overall	13.7	-	B	17.3	-	B	12.4	-	B

Table 3.1: Existing Conditions Level of Service Summary Cont'd

Intersection	Existing Conditions								
	AM			PM			WE		
	HCM Delay	v/c Ratio	LOS	HCM Delay	v/c Ratio	LOS	HCM Delay	v/c Ratio	LOS
7: Honoapiilani Highway & Kaanapali Parkway/Halelo Street									
NB LT	35.8	0.72	D	75.6	0.83	E	42.2	0.67	D
NB TH/RT	16.1	0.62	B	22.0	0.61	C	15.4	0.51	B
EB LT/TH	37.9	0.57	D	71.4	0.83	E	39.5	0.69	D
EB RT	23.1	0.10	C	47.3	0.49	D	26.9	0.30	C
WB LT/TH/RT	38.9	0.16	D	82.1	0.18	F	46.5	0.22	D
SB LT	40.2	0.31	D	84.8	0.57	F	44.5	0.22	D
SB TH	22.7	0.72	C	37.5	0.83	D	22.1	0.74	C
SB RT	15.6	0.07	B	21.8	0.11	C	14.9	0.14	B
Overall	23.0	-	C	40.0	-	D	23.6	-	C
8: Honoapiilani Highway & Leialii Parkway									
NB LT	81.1	0.43	F	71.1	0.49	E	83.4	0.42	F
NB TH/RT	7.2	0.60	A	9.2	0.65	A	2.0	0.49	A
EB LT/TH/RT	58.7	0.02	E	57.1	0.05	E	50.4	0.01	D
WB LT	62.2	0.36	E	62.8	0.53	E	58.4	0.62	E
WB TH/RT	58.9	0.01	E	57.1	0.04	E	50.7	0.03	D
SB LT	67.8	0.43	E	66.4	0.76	E	69.6	0.76	E
SB TH/RT	4.3	0.43	A	8.7	0.72	A	7.7	0.60	A
Overall	7.8	-	A	11.6	-	B	9.4	-	A
9: Honoapiilani Highway & Front Street/Flemming Road									
NB LT	122.6	0.70	F	101.6	0.74	F	95.2	0.83	F
NB TH/RT	6.2	0.57	A	1.5	0.60	A	13.0	0.40	B
EB LT/TH/RT	52.2	0.43	D	59.0	0.70	E	58.8	0.62	E
WB LT/TH/RT	54.4	0.60	D	51.5	0.25	D	54.5	0.33	D
SB LT	93.5	0.76	F	119.3	0.70	F	93.2	0.78	F
SB TH	4.3	0.41	A	8.8	0.67	A	5.6	0.53	A
SB RT	3.0	0.10	A	4.9	0.20	A	3.5	0.15	A
Overall	9.1	-	A	8.9	-	A	12.5	-	B
10: Honoapiilani Highway & Kapunakea Street									
NB LT	79.2	0.80	E	67.5	0.78	E	70.9	0.79	E
NB TH/RT	1.2	0.56	A	1.2	0.60	A	0.9	0.48	A
EB LT/TH	60.1	0.56	E	60.5	0.70	E	57.6	0.67	E
EB RT	51.1	0.01	D	47.1	0.02	D	46.9	0.02	D
WB LT	59.2	0.59	E	51.0	0.34	D	49.9	0.30	D
WB TH/RT	52.1	0.11	D	47.7	0.09	D	47.4	0.08	D
SB LT	104.5	0.79	F	77.3	0.80	E	90.6	0.85	F
SB TH/RT	7.8	0.47	A	14.8	0.74	B	3.3	0.64	A
Overall	10.5	-	B	14.0	-	B	8.6	-	A
11: Honoapiilani Highway & Keawe Street									
NB LT	74.9	0.78	E	67.2	0.79	E	62.4	0.82	E
NB TH	24.1	0.57	C	41.0	0.81	D	34.7	0.63	C
NB RT	17.8	0.14	B	29.3	0.32	C	29.4	0.31	C
EB LT/TH	61.3	0.53	E	64.0	0.77	E	53.4	0.61	D
EB RT	55.7	0.01	E	47.2	0.04	D	46.7	0.08	D
WB LT	50.0	0.50	D	51.7	0.72	D	44.0	0.66	D
WB TH	44.8	0.16	D	36.4	0.17	D	34.0	0.18	C
WB RT	47.5	0.37	D	38.7	0.34	D	34.4	0.21	C
SB LT	62.1	0.94	E	74.1	1.02	F*	73.6	0.92	E
SB TH/RT	0.9	0.43	A	2.2	0.69	A	42.8	0.60	D
Overall	24.3	-	C	32.1	-	C	44.4	-	D

* Denotes overcapacity condition, v/c ≥ 1.

4. BASE YEAR TRAFFIC CONDITIONS

The Base Year 2022 was selected to reflect the completion years of Scenarios 1, 2 and 3 of the Project and Base Year 2027 was selected to reflect the completion year of Scenario 4 of the Project as described in Section 1.2. The Base Year 2022 and 2027 scenarios represent the traffic conditions within the study area without the Project. Base Year traffic projections were formulated by applying a defacto growth rate to the existing 2016 traffic count volumes and adding trips generated by known future developments in the vicinity of the Project.

4.1 Defacto Growth Rate

Projections for Base Year 2022 and 2027 traffic were based upon a correlation between the existing traffic counts collected by ATA, HDOT's Maui Regional Travel Demand Model (MRTDM) growth for forecast years between 2007 and 2020, and nearby developments in the immediate vicinity of the Project. Many of the known background developments that were added separately to the study network are included in the MRTDM. Therefore, an overall annual growth rate of 0.5% was applied along Honoapiilani Highway for Base Years 2022 and 2027.

4.2 Traffic Forecasts for Known Developments

4.2.1 Background Projects

By Year 2022, numerous developments are anticipated to be completed within the Project study area. Many of the following known developments were determined to be accounted for in the MRTDM. The known developments that are projected to be complete by Year 2022 and generate traffic within the Project study area are illustrated in Figure 4.1 and listed below based on the best information available:

1. Kahoma Village – This project is located south of the Lahaina Cannery Mall on 22 acres of land. The project proposes to develop 101 single-family homes and 102 multi-family homes. Construction of the project began in late 2016, and completion is expected to occur at the end of 2018.
2. Kahoma Residential Subdivision – This project is located east of the proposed Kahoma Village and south of the Kahoma Stream Flood Control Channel. The project proposes to develop 68 single-family lots and a neighborhood park. There is currently no expected completion date, however, was included in the Project TIAR.
3. Lanikeha Kaanapali – This project is located east of Honoapiiliani Highway and across from Kaanapali Parkway. The project consists of 132 lots in a gated community, with Honoapiilani Highway access provided via Kekaa Drive and Kualapa Loop. Completion and full occupancy of the project is expected by 2017.
4. Kai A Ulu Affordable Homes – This project is located east of Honoapiilani Highway in the Kaanapali region. The project proposes to develop 33 affordable single-family homes with Honoapiilani Highway access provided via Kekaa Drive and Kualapa Loop. Completion of the project is expected in 2017.
5. Westin Nanea Ocean Villas – This project is located west of Honoapiilani Highway at the Honoapiilani Highway/Halawai Drive/Kai Malina Parkway intersection. The project proposes to develop a 390-villa timeshare resort. Completion of the project is expected in the summer of 2017.

6. West Maui Village – This project is located south of Honoapiilani Highway just east of Maui Preparatory Academy. The project proposes to develop 158 single-family units in 25 buildings. Completion of the project is expected in 2018.
7. West Maui Hospital and Medical Center – This project is located east of Honoapiilani Highway in the Kaanapali region. The project proposes to develop a critical access hospital, a skilled nursing facility, medical office buildings and a behavioral health center. Completion of the project is expected in late 2018.
8. Honua Kai – This project is located west of Honoapiilani Highway in the Kaanapali region. The project's remaining component includes 72 luxury townhouses and assumed to be completed by Year 2022.

Forecasts for Base Year 2027 include all background developments assumed to be completed by Year 2022. In addition, the known development that is projected to be complete by Year 2027 and generate traffic within the Project study area is illustrated in Figure 4.1 and listed below based on available information:

1. Kaanapali Golf Course Redevelopment – This project is located both mauka and makai of Honoapiilani Highway in the vicinity of the Honoapiilani Highway/Kaanapali Parkway/Halelo Street and Honoapiilani Highway/Kekaa Drive intersections. We understand the project proposes to redevelop the existing Kaanapali Golf Course to potentially provide a 136-room boutique hotel, 102 residential condos and an 80,000 square-foot shopping center. Completion is assumed to occur by Year 2027.

4.2.2 Trip Generation

The Institute of Transportation Engineers (ITE) publishes a book based on empirical data compiled from a body of more than 4,250 trip generation studies submitted by public agencies, developers, consulting firms, and associations. This publication, titled Trip Generation Manual, 9th Edition, provides trip rates and/or formulae based on graphs that correlate vehicular trips with independent variables. The independent variables can range from Dwelling Units (DU) for single-family attached homes to Gross Floor Area (GFA) for commercial or office development. These trip rates/formulae and their associated directional distributions were used to estimate the increase in the number of vehicular trips generated by the proposed Project. The rates selected were based on the land use description.

See Tables 4.1 and 4.2 for Trip Generation formulae and projections for the background developments.

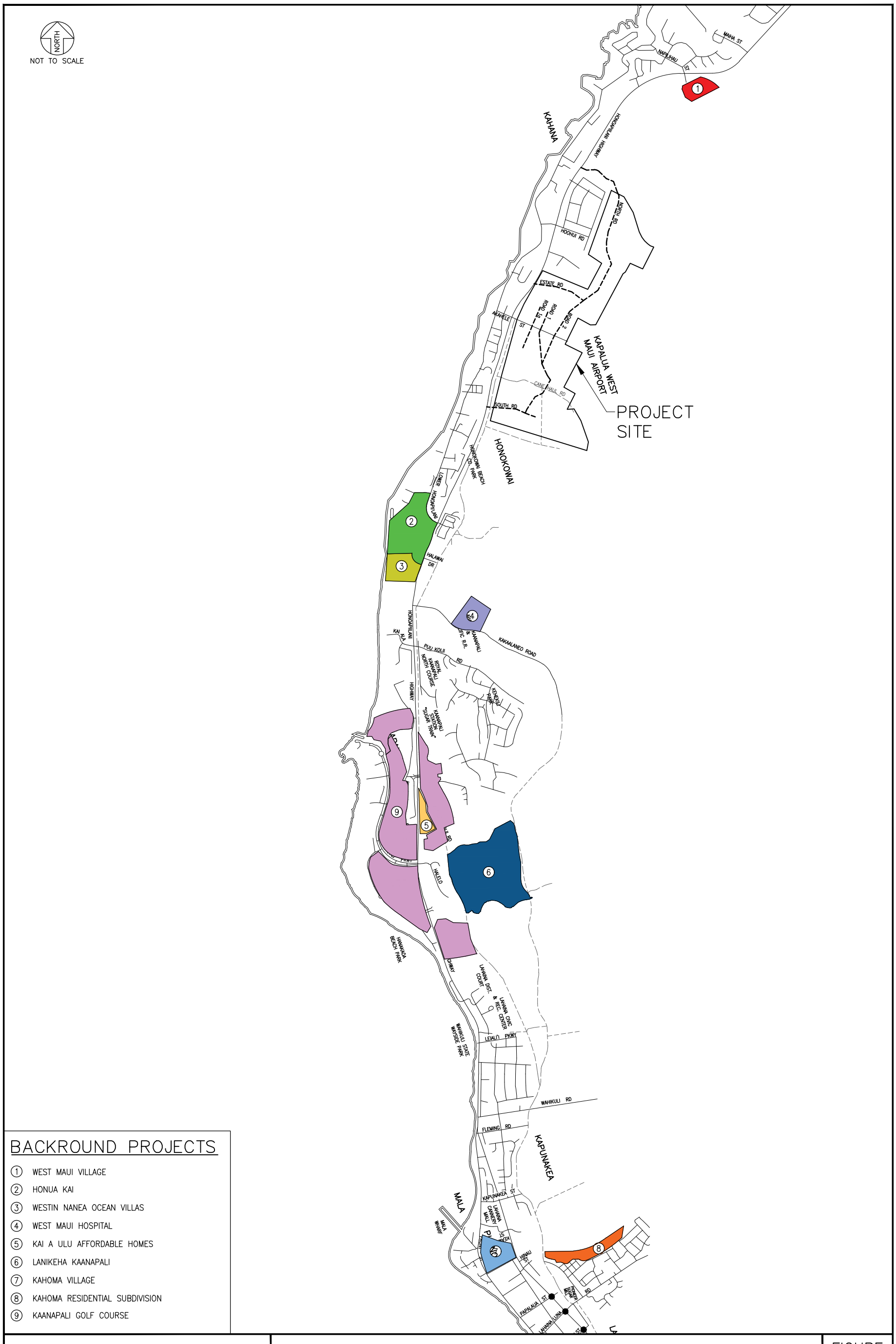

BACKROUND PROJECTS

1. WEST MAUI VILLAGE
2. HONUA KAI
3. WESTIN NANEA OCEAN VILLAS
4. WEST MAUI HOSPITAL
5. KAI A ULU AFFORDABLE HOMES
6. LANIKEHA KAANAPALI
7. KAHOMA VILLAGE
8. KAHOMA RESIDENTIAL SUBDIVISION
9. KAANAPALI GOLF COURSE

PULELEHUA

AUSTIN, TSUTSUMI & ASSOCIATES, INC.
ENGINEERS,SURVEYORS • HONOLULU,HAWAII

BACKGROUND PROJECTS

FIGURE
4.1

Table 4.1: Background Projects Trip Generation Rates

Land Use (ITE Code)	Independent Variable	AM Peak Hour		PM Peak Hour		WE Peak Hour	
		Trip Rate	% Enter	Trip Rate	% Enter	Trip Rate	% Enter
Single-Family Detached Housing (210)	Dwelling Units (DU)	[a]	26%	[b]	64%	[c]	54%
Residential Condo/Townhouse (230)	Dwelling Units (DU)	[d]	17%	[e]	67%	[f]	54%
Luxury Condominium/Townhouse (233)	Dwelling Units (DU)	[g]	23%	[h]	63%	[h]	63%
Assisted Living (254)	Beds	0.18	68%	0.29	50%	0.36	51%
Resort Hotel (330)	Rooms	[i]	72%	0.42	43%	0.42	43%
Hospital (610)	Beds	1.32	72%	1.42	33%	1.00	47%
Nursing Home (620)	Beds	0.17	69%	0.22	33%	0.38	50%
Medical-Dental Office Building (720)	1000 SF GFA	2.39	79%	[j]	28%	3.63	57%
Shopping Center (820)	1000 SF GFA	[k]	62%	[l]	48%	[m]	52%

[a] T=0.70(X)+9.74
[b] LN(T)=0.90LN(X)+0.51
[c] T=0.89(X)+8.77
[d] LN(T)=0.80*LN(X)+0.26
[e] LN(T)=0.82*LN(X)+0.32
[f] T=0.29*X+42.63
[g] LN(T)=0.76LN(X)+0.54
[h] T=0.78(X)-25.38
[i] T=0.40(X)-40.79
[j] LN(T)=0.90LN(X)+1.53
[k] LN(T)=0.61LN(X)+2.24
[l] LN(T)=0.67LN(X)+3.31
[m] LN(T)=0.65LN(X)+3.78

Table 4.2: Background Projects Trip Generation

Land Use	Independent Variable	AM Peak Hour			PM Peak Hour			WE Peak Hour		
		Enter (vph)	Exit (vph)	Total (vph)	Enter (vph)	Exit (vph)	Total (vph)	Enter (vph)	Exit (vph)	Total (vph)
Kahoma Village	203 SF/MF DU	30	103	133	110	59	169	92	80	172
Kahoma Residential Subdivision	68 SF DU	15	43	58	48	27	75	38	32	70
Lanikeha Kaanapali	132 SF DU	27	76	103	90	49	135	69	58	127
Kai A Ulu Affordable Homes	33 SF DU	9	24	33	25	14	39	21	18	39
Westin Nanea Ocean Villas	390 Room Hotel	84	32	116	71	93	164	71	93	164
West Maui Village	158 SF DU	13	62	75	59	29	88	48	41	89
Honua Kai Townhouses	72 DU	10	35	45	20	11	31	20	11	31
West Maui Hospital and Medical Center	80 Bed Assisted Living Facility 25 Bed Hospital 60,000 Sq. Ft. Medical Office Bldg.	153	47	200	79	174	253	160	129	289
Kaanapali Golf Course Redevelopment [1]	102 Room Hotel 136 SF/MF DU 80,000 Sq. Ft. Retail	57	69	125	132	129	261	189	170	358
Total Background External Trips		**398**	**491**	**888**	**634**	**585**	**1215**	**708**	**632**	**1339**

Notes
- SF DU = Single-Family Dwelling Unit
- MF DU = Multi-Family Dwelling Unit
- Forecast trips derived from available TIAR's for each Project, ITE Trip Generation and/or updated to reflect current status.
- Table 4.2 shows total external trips generated by known developments in the vicinity of the Project.

1. Includes approximate 18% internal trip reduction consistent with ITE Trip Generation Handbook, 3rd Edition. Also includes 20% pass-by trip reductions to retail component. Trip reductions applied to only weekday PM and weekend trips.

4.3 Planned Roadway Improvements

The following roadway improvements are anticipated to be constructed to support various developments and overall growth of the Lahaina region and were assumed to be completed by Year 2022 and 2027 without the Project.

Lahaina Bypass Road Phase 1B-2

The Lahaina Bypass Road (LBR) is a major bypass road that is expected to be completed in 4 phases to address regional traffic congestion near the historic town of Lahaina. The first two phases (1A and 1B-1) were completed in 2013 and ends at Hokiokio Place. Phase 1B-2 will extend LBR from Hokiokio Place to its southern terminus with Honoapiilani Highway and is expected to be completed in January 2018. Future Phases 1C and 1D will extend the bypass highway further north and result in the bypass highway stretching from Olowalu to just south of the existing Kapalua Airport.

Completion of Phase 1B-2 of the LBR is expected to reduce traffic along Honoapiilani Highway by diverting traffic to the LBR and impact traffic patterns south of the Honoapiilani Highway/Keawe Street/Lahaina Cannery Mall intersection. With the LBR Phase 1B-2, there will be five (5) connections between the LBR and Honoapiilani Highway and include Keawe Street, Lahainaluna Road, Hokiokio Place, Kai Hele Ku Street, and the southern terminus. At the southern terminus of the LBR, all regional northbound traffic will be rerouted to the LBR while regional southbound traffic will be able to utilize both Honolapiilani Highway and the LBR. The extension is expected to decrease the north and southbound through movement volumes along Honoapiilani Highway because of an increase in regional throughput traffic using the LBR and intersection improvements at the Honoapiilani Highway/Keawe Street/Lahaina Cannery Mall intersection that will help route more southbound traffic to LBR. Rerouted traffic was generally based on forecast capacity thresholds at the southern terminus and Keawe Street intersection with Honoapiilani Highway.

Honoapiilani Highway/Keawe Street/Lahaina Cannery Mall

An additional southbound left-turn lane is planned for the Honoapiilani Highway/Keawe Street/Lahaina Cannery Mall intersection, resulting in dual southbound left-turn lanes. Based on existing conditions, the existing single southbound left-turn lane movement operates at over-capacity conditions. The addition of a second left-turn storage lane is expected to increase capacity and reduce queue spillback. Completion of the double left-turn is expected by 2018.

Honoapiilani Highway/Napilihau Street

An exclusive right-turn lane on the northbound Honoapiilani Highway approach and an exclusive left-turn lane and shared through/right-turn lane on the westbound Napilihau Street approach is anticipated to be constructed as part of West Maui Village roadway improvements. These changes are expected to mitigate potential traffic problems from the proposed development. Completion of the roadway improvements is expected to occur in 2018 with completion of the development.

4.4 Base Year 2022 Analysis

It is anticipated that by Base Year 2022, traffic will have increased over existing conditions due to the development in the Lahaina and Kaanapali regions. Actual growth within the study region may vary based upon the actual construction of the various nearby developments.

4.4.1 Base Year 2022 Intersection Analysis

By Base Year 2022 without the Project, traffic at the study intersections along Honoapiilani Highway is estimated to increase overall by approximately 10-20% on various parts of the corridor during the AM, PM and WE peak hours of traffic. All study intersections are forecast to operate similar to existing conditions. Overall intersection delays generally increased by only 1-5 seconds at most study intersections. The majority of intersection movements currently operating at LOS E/F conditions will continue to operate similarly in Base Year 2022.

[7] Honoapiilani Highway/Kaanapali Parkway/Halelo Street

During the PM peak hour, the eastbound shared left-turn/through movement is expected to operate at LOS F and over-capacity. Mitigation is proposed in Section 4.4.2.

[8-11] Honoapiilani Highway from Leialii Parkway to Keawe Street

Since the Honoapiilani Highway/Keawe Street intersection will be widened to provide dual southbound left-turn lanes, it was assumed that some of the signal timing plans for intersections along the coordinated corridor from Leialii Parkway to Keawe Street would be reoptimized to make signals run more efficient and improve throughput progression.

Figure 4.2 illustrates the Base Year 2022 forecast traffic volumes and LOS for the study intersection movements. Table 4.3 summarizes the Base Year 2022 LOS at the study intersections compared to existing conditions. LOS worksheets are provided in Appendix C.

4.4.2 Base Year 2022 With Mitigation Intersection Analysis

[7] Honoapiilani Highway/Kaanapali Parkway/Halelo Street

- Modify the eastbound approach to incorporate a dedicated left-turn lane, a shared left-turn/through lane and two (2) dedicated right-turn lanes.

With the recommended mitigation, the intersection is anticipated to improve and operate adequately at overall LOS D or better during all peak hours of traffic. Similar to existing conditions, numerous minor street approaches and major street left-turn movements will continue operating at LOS E/F during the PM peak hour due to the long through movement green time and cycle length.

Figure 4.3 illustrates the Base Year 2022 with mitigation forecast traffic volumes and LOS for the study intersection movements. Table 4.3 summarizes the Base Year 2022 with mitigation LOS at the study intersections compared to Base Year 2022 without mitigation. LOS worksheets are provided in Appendix C.

LEGEND

AA(AA)[AA] – AM(PM)[WE] PEAK HOUR OF TRAFFIC VOLUMES

X(X)[X] – AM(PM)[WE] LOS

Y – SIGNALIZED INTERSECTION Y, OVERALL AM/PM/WE LOS

NOTE:
THIS DRAWING IS FOR ILLUSTRATIVE PURPOSES ONLY. DO NOT USE FOR CONSTRUCTION.

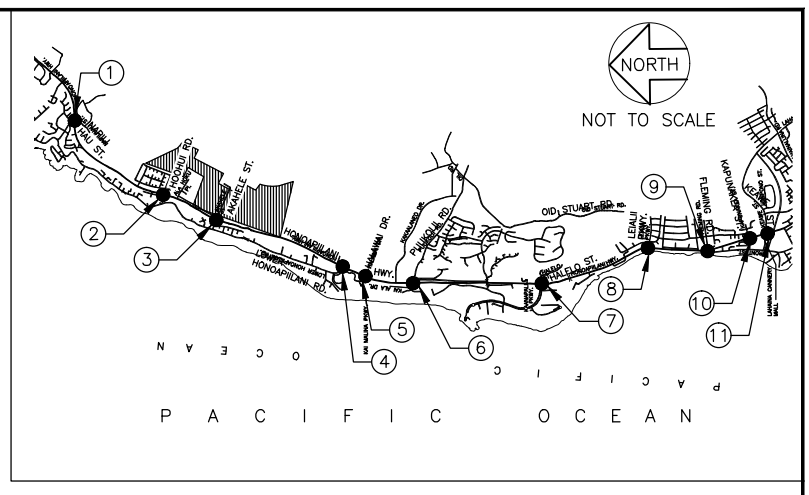

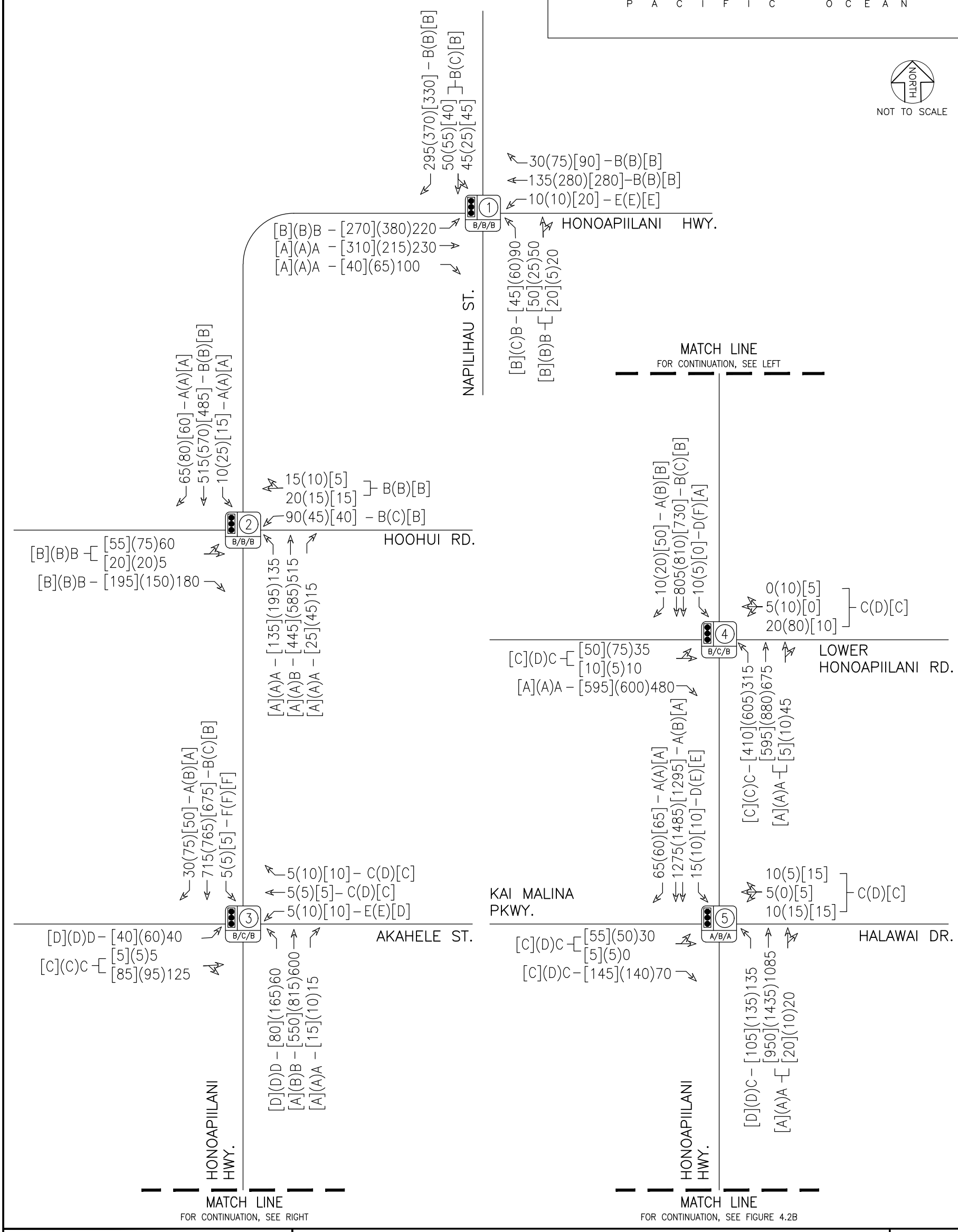

PULELEHUA	AUSTIN, TSUTSUMI & ASSOCIATES, INC. ENGINEERS, SURVEYORS • HONOLULU, HAWAII	FIGURE
	BASE YEAR 2022 LANE CONFIGURATION, VOLUMES AND LOS	4.2A

LEGEND

AA(AA)[AA] – AM(PM)[WE] PEAK HOUR OF TRAFFIC VOLUMES

X(X)[X] – AM(PM)[WE] LOS

X/X/X – SIGNALIZED INTERSECTION Y, OVERALL AM/PM/WE LOS

NOTE:
THIS DRAWING IS FOR ILLUSTRATIVE PURPOSES ONLY. DO NOT USE FOR CONSTRUCTION.

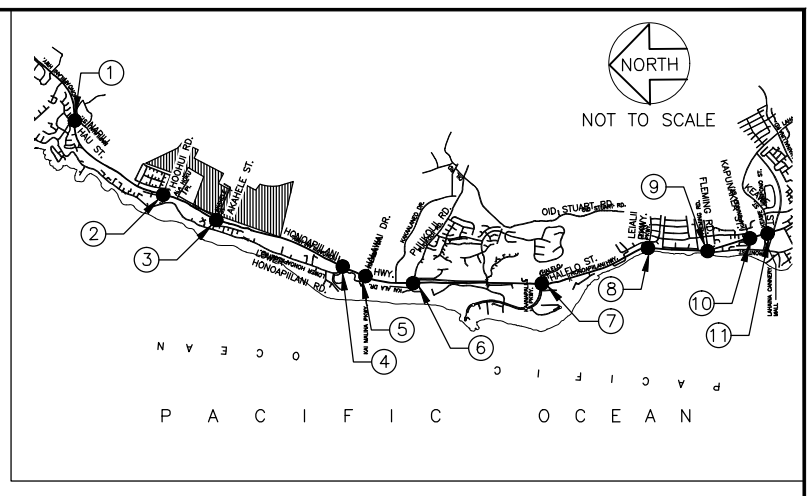

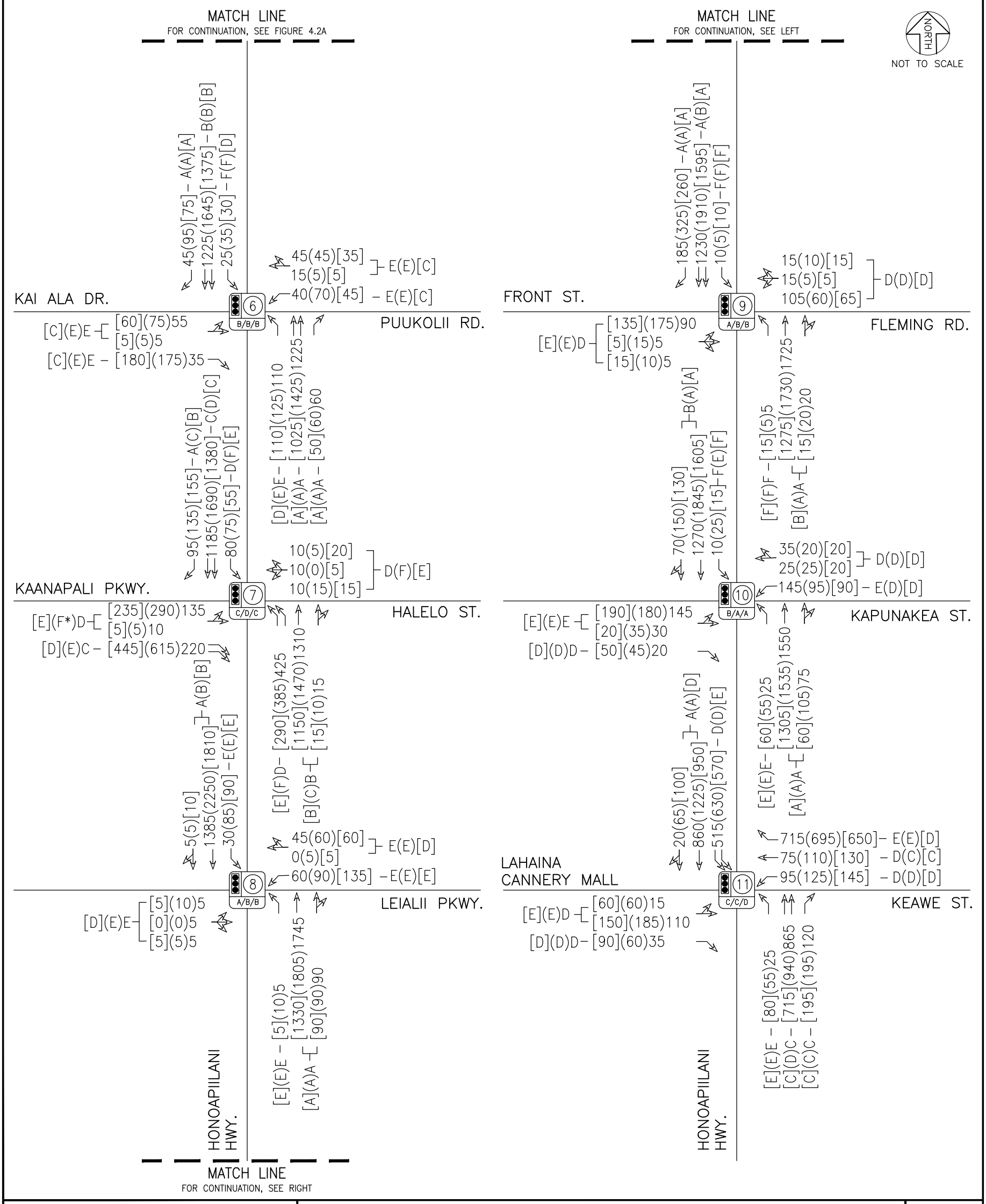

PULELEHUA	AUSTIN, TSUTSUMI & ASSOCIATES, INC. ENGINEERS,SURVEYORS • HONOLULU,HAWAII	FIGURE
	BASE YEAR 2022 LANE CONFIGURATION, VOLUMES AND LOS	4.2B

LEGEND

AA(AA)[AA] – AM(PM)[WE] PEAK HOUR OF TRAFFIC VOLUMES

X(X)[X] – AM(PM)[WE] LOS

Y – SIGNALIZED INTERSECTION Y, OVERALL AM/PM/WE LOS

NOTE:
THIS DRAWING IS FOR ILLUSTRATIVE PURPOSES ONLY. DO NOT USE FOR CONSTRUCTION.

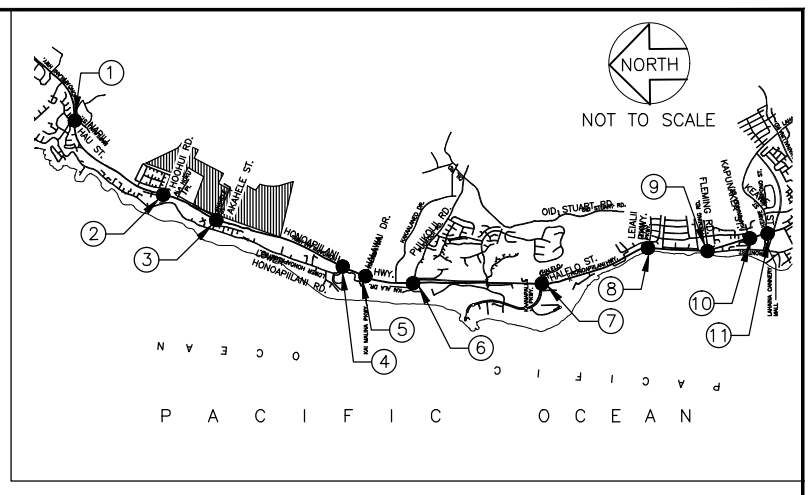

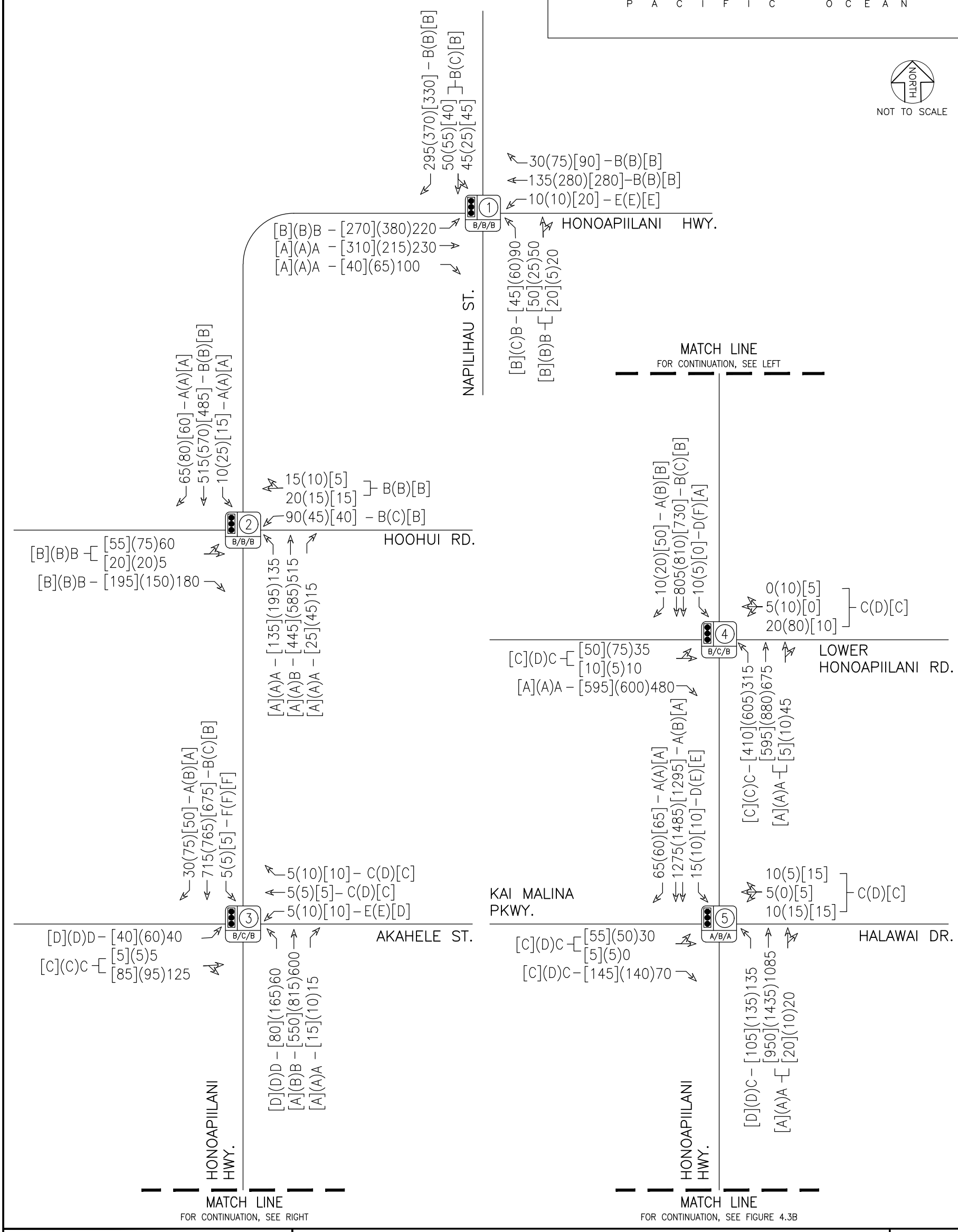

PULELEHUA	AUSTIN, TSUTSUMI & ASSOCIATES, INC. ENGINEERS, SURVEYORS • HONOLULU, HAWAII	FIGURE
	BASE YEAR 2022 WITH MITIGATION LANE CONFIGURATION, VOLUMES AND LOS	4.3A

LEGEND

AA(AA)[AA] – AM(PM)[WE] PEAK HOUR OF TRAFFIC VOLUMES

X(X)[X] – AM(PM)[WE] LOS

Y – SIGNALIZED INTERSECTION Y, OVERALL AM/PM/WE LOS

NOTE:
THIS DRAWING IS FOR ILLUSTRATIVE PURPOSES ONLY. DO NOT USE FOR CONSTRUCTION.

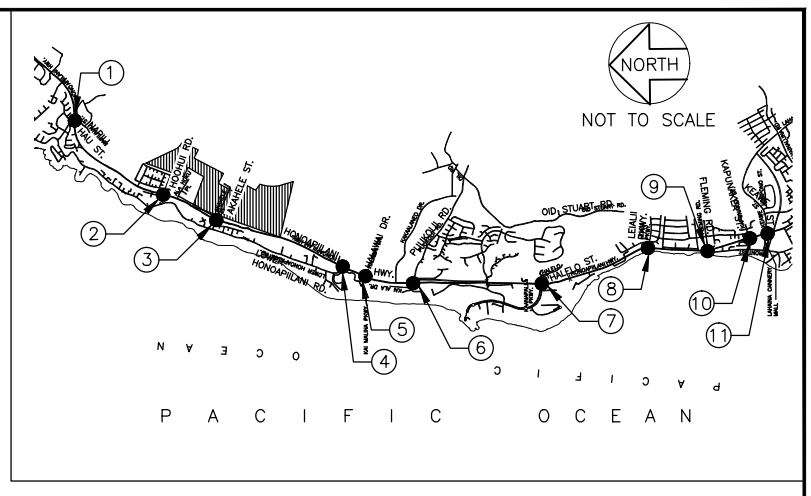

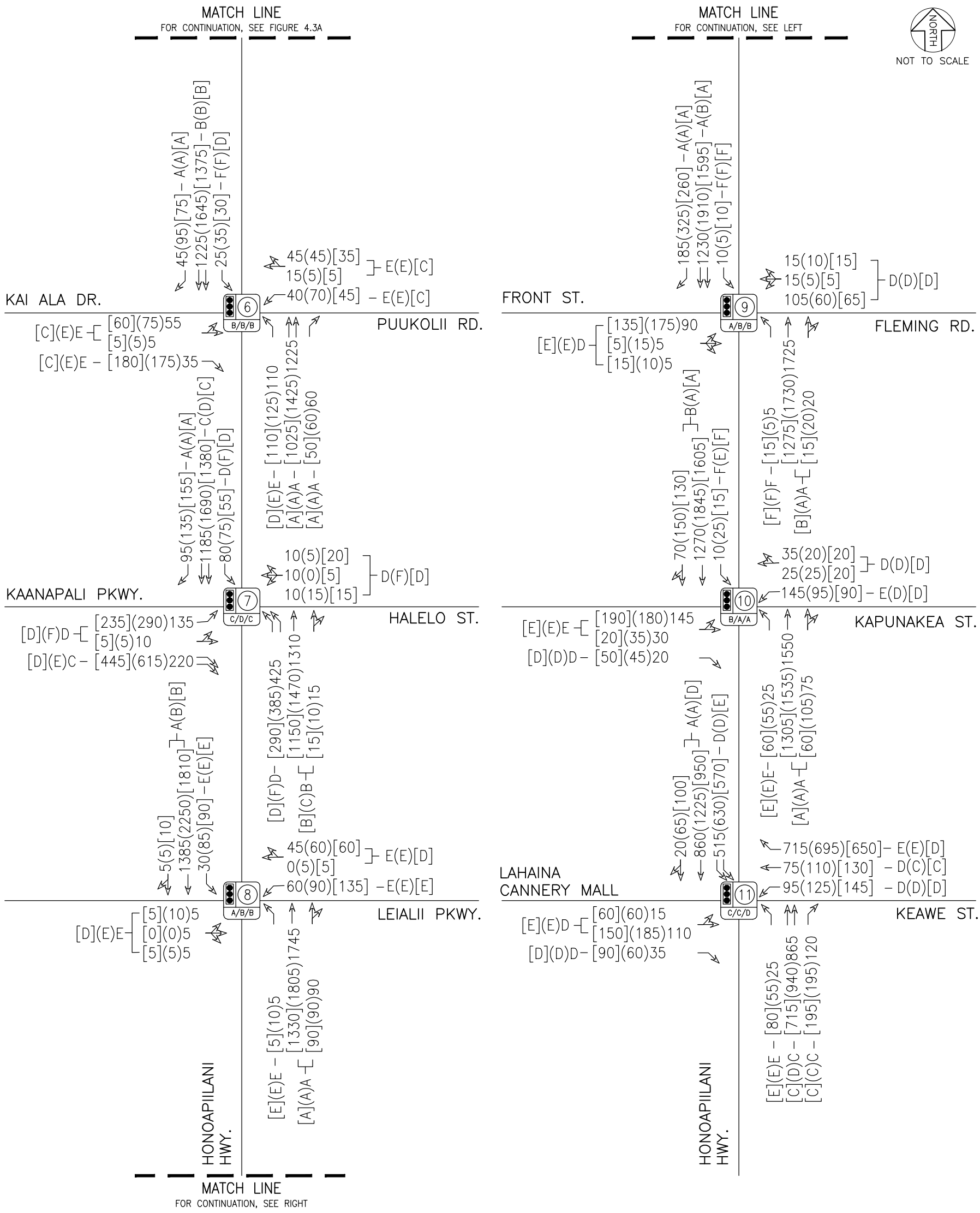

PULELEHUA

AUSTIN, TSUTSUMI & ASSOCIATES, INC.
ENGINEERS,SURVEYORS • HONOLULU,HAWAII

BASE YEAR 2022 WITH MITIGATION LANE CONFIGURATION, VOLUMES AND LOS

FIGURE
4.3B

Table 4.3: Existing Conditions, Base Year 2022 and Base Year 2022 with Mitigation Level of Service Summary

	Existing Conditions									Base Year 2022									Base Year 2022 with Mitigation								
	AM			PM			WE			AM			PM			WE			AM			PM			WE		
Intersection	HCM Delay	v/c Ratio	LOS	HCM Delay	v/c Ratio	LOS	HCM Delay	v/c Ratio	LOS	HCM Delay	v/c Ratio	LOS	HCM Delay	v/c Ratio	LOS	HCM Delay	v/c Ratio	LOS	HCM Delay	v/c Ratio	LOS	HCM Delay	v/c Ratio	LOS	HCM Delay	v/c Ratio	LOS
1: Honoapiilani Highway & Napilihau Street																											
NB LT	18.5	0.74	B	18.3	0.80	B	18.3	0.76	B	18.9	0.75	B	19.7	0.82	B	19.5	0.77	B									
NB TH	-	-	-	-	-	-	-	-	-	8.1	0.32	A	6.0	0.23	A	7.6	0.37	A									
NB TH/RT	8.1	0.39	A	6.0	0.24	A	7.4	0.37	A	-	-	-	-	-	-	-	-	-									
NB RT	-	-	-	-	-	-	-	-	-	6.9	0.08	A	5.2	0.05	A	5.9	0.03	A									
EB LT/TH	14.9	0.23	B	18.4	0.20	B	16.2	0.19	B	15.0	0.26	B	20.4	0.29	C	17.8	0.28	B									
EB RT	14.5	0.16	B	18.0	0.13	B	16.1	0.15	B	14.5	0.16	B	19.5	0.13	B	17.2	0.18	B									
WB LT	-	-	-	-	-	-	-	-	-	17.4	0.30	B	22.8	0.28	C	19.5	0.18	B				**Same as Base Year 2022**					
WB TH/RT	-	-	-	-	-	-	-	-	-	14.7	0.22	B	19.4	0.13	B	17.7	0.27	B									
WB LT/TH/RT	15.5	0.28	B	18.5	0.19	B	16.2	0.19	B	-	-	-	-	-	-	-	-	-									
SB LT	97.0	0.69	F	95.1	0.50	F	67.1	0.72	E	66.8	0.72	E	73.0	0.73	E	55.6	0.77	E									
SB TH	11.5	0.26	B	16.6	0.57	B	14.2	0.53	B	12.9	0.31	B	17.9	0.60	B	15.2	0.57	B									
SB RT	10.3	0.02	B	12.5	0.05	B	10.9	0.07	B	11.2	0.02	B	13.1	0.05	B	11.4	0.06	B									
Overall	13.5	-	B	15.2	-	B	14.0	-	B	14.2	-	B	16.7	-	B	15.1	-	B									
2: Honoapiilani Highway & Hoohui Road																											
NB LT	8.8	0.30	A	8.0	0.41	A	8.0	0.28	A	9.8	0.36	A	9.2	0.47	A	8.4	0.33	A									
NB TH	10.4	0.61	B	8.6	0.60	A	8.8	0.53	A	10.8	0.64	B	9.3	0.66	A	8.9	0.57	A									
NB RT	0.0	0.00	A	0.0	0.00	A	0.0	0.00	A	0.0	0.00	A	0.0	0.00	A	0.0	0.00	A									
EB LT/TH	15.4	0.16	B	17.8	0.28	B	14.5	0.19	B	17.3	0.17	B	19.9	0.31	B	16.3	0.22	B									
EB RT	14.6	0.07	B	16.6	0.06	B	14.0	0.09	B	16.3	0.06	B	18.4	0.07	B	15.6	0.10	B									
WB LT	17.6	0.25	B	19.5	0.17	B	15.6	0.11	B	19.9	0.28	B	22.0	0.20	C	17.7	0.14	B				**Same as Base Year 2022**					
WB TH/RT	14.5	0.06	B	16.6	0.07	B	13.9	0.06	B	16.3	0.07	B	18.3	0.07	B	15.5	0.06	B									
SB LT	9.6	0.03	A	7.8	0.05	A	8.0	0.03	A	9.7	0.03	A	8.1	0.07	A	8.0	0.04	A									
SB TH	14.2	0.73	B	12.3	0.73	B	11.9	0.69	B	15.1	0.77	B	13.2	0.77	B	12.5	0.73	B									
SB RT	9.6	0.05	A	7.9	0.05	A	8.2	0.04	A	9.5	0.05	A	8.0	0.06	A	8.1	0.04	A									
Overall	12.4	-	B	10.9	-	B	10.6	-	B	13.3	-	B	11.8	-	B	11.1	-	B									
3: Honoapiilani Highway & Akahele Street																											
NB LT	42.1	0.79	D	36.4	0.78	D	35.4	0.77	D	42.7	0.77	D	42.6	0.81	D	37.1	0.76	D									
NB TH	10.8	0.64	B	11.6	0.71	B	9.9	0.56	A	10.6	0.65	B	13.0	0.76	B	10.0	0.60	A									
NB RT	7.0	0.01	A	6.3	0.01	A	6.9	0.01	A	6.5	0.01	A	5.9	0.01	A	6.4	0.01	A									
EB LT	36.9	0.68	D	49.2	0.78	D	36.0	0.66	D	44.0	0.72	D	52.9	0.77	D	42.6	0.71	D									
EB TH/RT	20.3	0.07	C	27.1	0.05	C	20.3	0.05	C	24.0	0.08	C	32.8	0.04	C	23.8	0.06	C									
WB LT	64.3	0.53	E	59.3	0.56	E	46.2	0.55	D	69.5	0.53	E	65.8	0.58	E	51.3	0.55	D				**Same as Base Year 2022**					
WB TH	21.4	0.01	C	29.0	0.03	C	21.2	0.01	C	25.3	0.03	C	35.5	0.03	D	24.8	0.03	C									
WB RT	21.4	0.01	C	0.0	0.00	A	21.2	0.01	C	25.2	0.01	C	35.4	0.01	D	24.7	0.01	C									
SB LT	106.1	0.70	F	114.5	0.40	F	117.6	0.70	F	112.0	0.71	F	126.5	0.72	F	110.8	0.70	F									
SB TH	14.3	0.80	B	19.4	0.85	B	14.3	0.79	B	15.3	0.84	B	22.9	0.88	C	15.5	0.83	B									
SB RT	8.1	0.02	A	10.6	0.05	B	8.4	0.03	A	7.8	0.02	A	10.6	0.05	B	8.3	0.03	A									
Overall	15.2	-	B	18.7	-	B	15.0	-	B	15.7	-	B	21.5	-	C	15.8	-	B									
4: Honoapiilani Highway & Lower Honoapiilani Road																											
NB LT	19.3	0.80	B	24.5	0.91	C	18.5	0.83	B	22.4	0.83	C	30.0	0.94	C	21.2	0.87	C									
NB TH/RT	4.8	0.31	A	4.4	0.32	A	2.6	0.21	A	4.7	0.33	A	4.4	0.36	A	2.4	0.24	A									
EB LT/TH	21.2	0.15	C	32.3	0.31	C	22.4	0.24	C	25.0	0.19	C	41.7	0.38	D	26.8	0.28	C									
EB RT	0.0	0.00	A	0.0	0.00	A	0.0	0.00	A	0.0	0.00	A	0.0	0.00	A	0.0	0.00	A				**Same as Base Year 2022**					
WB LT/TH/RT	20.8	0.08	C	33.1	0.39	C	21.2	0.04	C	24.4	0.10	C	42.5	0.47	D	25.3	0.05	C									
SB LT	48.5	0.72	D	74.6	0.42	E	0.0	0.00	A	50.7	0.74	D	87.3	0.72	F	0.0	0.00	A									
SB TH	11.7	0.53	B	21.8	0.64	C	12.9	0.53	B	13.0	0.58	B	27.4	0.70	C	14.7	0.58	B									
SB RT	8.7	0.00	A	16.1	0.01	B	10.0	0.03	A	9.2	0.00	A	19.5	0.01	B	11.0	0.03	B									
Overall	10.9	-	B	17.2	-	B	11.2	-	B	12.0	-	B	20.9	-	C	12.6	-	B									

Table 4.3: Existing Conditions, Base Year 2022 and Base Year 2022 with Mitigation Level of Service Summary Cont'd

	Existing Conditions									Base Year 2022									Base Year 2022 with Mitigation								
	AM			PM			WE			AM			PM			WE			AM			PM			WE		
Intersection	HCM Delay	v/c Ratio	LOS	HCM Delay	v/c Ratio	LOS	HCM Delay	v/c Ratio	LOS	HCM Delay	v/c Ratio	LOS	HCM Delay	v/c Ratio	LOS	HCM Delay	v/c Ratio	LOS	HCM Delay	v/c Ratio	LOS	HCM Delay	v/c Ratio	LOS	HCM Delay	v/c Ratio	LOS
5: Honoapiilani Highway & Kai Malina Parkway/Halawai Drive																											
NB LT	29.7	0.79	C	38.4	0.78	D	36.3	0.82	D	31.8	0.79	C	43.8	0.82	D	35.3	0.78	D									
NB TH/RT	4.3	0.44	A	6.5	0.56	A	4.9	0.39	A	4.1	0.45	A	7.1	0.60	A	4.9	0.41	A									
EB LT/TH	23.4	0.08	C	28.3	0.08	C	22.8	0.11	C	30.4	0.16	C	37.0	0.22	D	30.2	0.25	C									
EB RT	23.7	0.02	C	28.4	0.01	C	22.8	0.01	C	30.3	0.01	C	36.2	0.03	D	29.5	0.04	C									
WB LT/TH/RT	23.9	0.06	C	28.7	0.06	C	22.7	0.07	C	30.9	0.11	C	38.1	0.08	D	29.5	0.10	C									
SB LT	43.5	0.75	D	62.5	0.74	E	50.5	0.73	D	53.5	0.78	D	73.1	0.78	E	59.7	0.75	E									
SB TH	5.5	0.54	A	8.4	0.64	A	6.3	0.56	A	7.7	0.61	A	12.5	0.72	B	8.8	0.63	A									
SB RT	3.4	0.03	A	4.7	0.02	A	3.9	0.03	A	4.5	0.04	A	6.4	0.04	A	5.1	0.04	A									
Overall	6.1	-	A	8.7	-	A	6.9	-	A	8.1	-	A	12.1	-	B	9.3	-	A									
6: Honoapiilani Highway & Kai Ala Drive/Puukolii Road																											
NB LT	84.5	0.84	F	86.0	0.86	F	33.8	0.77	C	74.0	0.85	E	78.1	0.86	E	39.8	0.78	D									
NB TH	5.0	0.37	A	7.6	0.48	A	8.0	0.41	A	6.2	0.48	A	9.8	0.58	A	8.2	0.49	A									
NB RT	3.4	0.04	A	4.7	0.04	A	6.0	0.03	A	3.8	0.04	A	5.4	0.04	A	5.5	0.03	A									
EB LT/TH	69.2	0.33	E	68.2	0.35	E	24.5	0.15	C	68.7	0.38	E	67.2	0.37	E	31.3	0.23	C									
EB RT	64.5	0.01	E	64.1	0.02	E	24.0	0.07	C	63.3	0.01	E	63.7	0.13	E	30.1	0.05	C									
WB LT	75.0	0.38	E	77.8	0.49	E	26.7	0.14	C	75.0	0.39	E	78.4	0.54	E	34.6	0.21	C									
WB TH/RT	65.3	0.10	E	64.2	0.02	E	23.8	0.02	C	64.1	0.10	E	62.5	0.03	E	29.9	0.03	C									
SB LT	82.7	0.67	F	90.9	0.77	F	35.3	0.53	D	82.9	0.69	F	89.0	0.78	F	42.4	0.58	D									
SB TH	8.2	0.44	A	13.3	0.58	B	12.0	0.64	B	10.0	0.52	B	18.1	0.73	B	13.6	0.73	B									
SB RT	5.3	0.02	A	7.7	0.06	A	7.6	0.04	A	6.0	0.03	A	8.5	0.07	A	7.4	0.05	A									
Overall	13.7	-	B	17.3	-	B	12.4	-	B	13.9	-	B	19.9	-	B	13.6	-	B									
7: Honoapiilani Highway & Kaanapali Parkway/Halelo Street																											
NB LT	35.8	0.72	D	75.6	0.83	E	42.2	0.67	D	45.6	0.77	D	93.1	0.85	F	60.2	0.74	E	40.7	0.75	D	91.4	0.85	F	49.6	0.71	D
NB TH/RT	16.1	0.62	B	22.0	0.61	C	15.4	0.51	B	19.0	0.70	B	22.9	0.67	C	18.4	0.59	B	16.2	0.68	B	22.0	0.66	C	13.7	0.56	B
EB LT/TH	37.9	0.57	D	71.4	0.83	E	39.5	0.69	D	48.2	0.67	D	195.8	1.16	F*	60.0	0.79	E	44.2	0.46	D	86.1	0.60	F	48.6	0.58	D
EB RT	23.1	0.10	C	47.3	0.49	D	26.9	0.30	C	28.7	0.08	C	66.4	0.58	E	38.3	0.34	D	28.3	0.08	C	63.9	0.51	E	36.4	0.34	D
WB LT/TH/RT	38.9	0.16	D	82.1	0.18	F	46.5	0.22	D	50.1	0.18	D	101.9	0.23	F	66.3	0.36	E	44.7	0.18	D	100.0	0.23	F	54.7	0.32	D
SB LT	40.2	0.31	D	84.8	0.57	F	44.5	0.22	D	51.8	0.59	D	115.3	0.73	F	65.4	0.55	E	46.2	0.57	D	112.3	0.72	F	53.9	0.50	D
SB TH	22.7	0.72	C	37.5	0.83	D	22.1	0.74	C	25.7	0.77	C	42.7	0.88	D	27.6	0.79	C	22.1	0.75	C	41.1	0.88	D	20.8	0.76	C
SB RT	15.6	0.07	B	21.8	0.11	C	14.9	0.14	B	9.6	0.08	A	20.1	0.12	C	16.7	0.15	B	9.8	0.08	A	8.2	0.11	A	6.9	0.13	A
Overall	23.0	-	C	40.0	-	D	23.6	-	C	27.0	-	C	53.8	-	D	30.7	-	C	23.7	-	C	44.8	-	D	24.1	-	C
8: Honoapiilani Highway & Leialii Parkway																											
NB LT	81.1	0.43	F	71.1	0.49	E	83.4	0.42	F	75.8	0.45	E	69.1	0.50	E	72.4	0.44	E									
NB TH/RT	7.2	0.60	A	9.2	0.65	A	2.0	0.49	A	8.8	0.70	A	2.4	0.75	A	2.9	0.60	A									
EB LT/TH/RT	58.7	0.02	E	57.1	0.05	E	50.4	0.01	D	58.6	0.06	E	57.0	0.07	E	50.0	0.03	D									
WB LT	62.2	0.36	E	62.8	0.53	E	58.4	0.62	E	62.0	0.37	E	62.5	0.54	E	58.1	0.63	E									
WB TH/RT	58.9	0.01	E	57.1	0.04	E	50.7	0.03	D	58.6	0.01	E	56.7	0.05	E	50.3	0.05	D									
SB LT	67.8	0.43	E	66.4	0.76	E	69.6	0.76	E	68.8	0.52	E	66.2	0.78	E	76.2	0.79	E									
SB TH/RT	4.3	0.43	A	8.7	0.72	A	7.7	0.60	A	5.2	0.51	A	13.3	0.83	B	10.2	0.70	B									
Overall	7.8	-	A	11.6	-	B	9.4	-	A	9.1	-	A	10.8	-	B	11.0	-	B									
9: Honoapiilani Highway & Front Street/Flemming Road																											
NB LT	122.6	0.70	F	101.6	0.74	F	95.2	0.83	F	89.8	0.73	F	96.3	0.74	F	87.9	0.84	F									
NB TH/RT	6.2	0.57	A	1.5	0.60	A	13.0	0.40	B	7.6	0.67	A	1.9	0.71	A	16.3	0.50	B									
EB LT/TH/RT	52.2	0.43	D	59.0	0.70	E	58.8	0.62	E	52.6	0.48	D	59.5	0.72	E	57.7	0.66	E									
WB LT/TH/RT	54.4	0.60	D	51.5	0.25	D	54.5	0.33	D	54.3	0.61	D	49.7	0.24	D	52.3	0.32	D									
SB LT	93.5	0.76	F	119.3	0.70	F	93.2	0.78	F	88.2	0.81	F	87.4	0.74	F	88.0	0.82	F									
SB TH	4.3	0.41	A	8.8	0.67	A	5.6	0.53	A	4.9	0.48	A	11.8	0.79	B	7.7	0.64	A									
SB RT	3.0	0.10	A	4.9	0.20	A	3.5	0.15	A	3.2	0.11	A	5.6	0.24	A	4.3	0.17	A									
Overall	9.1	-	A	8.9	-	A	12.5	-	B	9.9	-	A	10.4	-	B	14.8	-	B									

Same as Base Year 2022

Table 4.3: Existing Conditions, Base Year 2022 and Base Year 2022 with Mitigation Level of Service Summary Cont'd

	Existing Conditions									Base Year 2022									Base Year 2022 with Mitigation								
	AM			PM			WE			AM			PM			WE			AM			PM			WE		
Intersection	HCM Delay	v/c Ratio	LOS	HCM Delay	v/c Ratio	LOS	HCM Delay	v/c Ratio	LOS	HCM Delay	v/c Ratio	LOS	HCM Delay	v/c Ratio	LOS	HCM Delay	v/c Ratio	LOS	HCM Delay	v/c Ratio	LOS	HCM Delay	v/c Ratio	LOS	HCM Delay	v/c Ratio	LOS
10: Honoapiilani Highway & Kapunakea Street																											
NB LT	79.2	0.80	E	67.5	0.78	E	70.9	0.79	E	74.7	0.79	E	67.6	0.79	E	71.9	0.79	E	**Same as Base Year 2022**								
NB TH/RT	1.2	0.56	A	1.2	0.60	A	0.9	0.48	A	1.3	0.66	A	1.3	0.71	A	2.8	0.58	A									
EB LT/TH	60.1	0.56	E	60.5	0.70	E	57.6	0.67	E	64.2	0.72	E	62.3	0.75	E	59.7	0.74	E									
EB RT	51.1	0.01	D	47.1	0.02	D	46.9	0.02	D	48.3	0.01	D	43.6	0.03	D	42.6	0.04	D									
WB LT	59.2	0.59	E	51.0	0.34	D	49.9	0.30	D	55.1	0.51	E	46.9	0.29	D	45.3	0.26	D									
WB TH/RT	52.1	0.11	D	47.7	0.09	D	47.4	0.08	D	49.3	0.10	D	44.1	0.08	D	42.9	0.07	D									
SB LT	104.5	0.79	F	77.3	0.80	E	90.6	0.85	F	101.8	0.83	F	72.4	0.80	E	85.2	0.84	F									
SB TH/RT	7.8	0.47	A	14.8	0.74	B	3.3	0.64	A	10.3	0.56	B	5.5	0.89	A	3.6	0.78	A									
Overall	10.5	-	B	14.0	-	B	8.6	-	A	11.9	-	B	9.7	-	A	9.7	-	A									
11: Honoapiilani Highway & Keawe Street																											
NB LT	74.9	0.78	E	67.2	0.79	E	62.4	0.82	E	79.8	0.79	E	69.3	0.78	E	64.0	0.79	E	**Same as Base Year 2022**								
NB TH	24.1	0.57	C	41.0	0.81	D	34.7	0.63	C	32.3	0.62	C	39.4	0.75	D	31.0	0.55	C									
NB RT	17.8	0.14	B	29.3	0.32	C	29.4	0.31	C	23.6	0.08	C	28.6	0.21	C	25.9	0.20	C									
EB LT/TH	61.3	0.53	E	64.0	0.77	E	53.4	0.61	D	47.7	0.35	D	63.6	0.79	E	61.5	0.77	E									
EB RT	55.7	0.01	E	47.2	0.04	D	46.7	0.08	D	43.9	0.02	D	42.9	0.03	D	44.5	0.04	D									
WB LT	50.0	0.50	D	51.7	0.72	D	44.0	0.66	D	38.3	0.29	D	40.7	0.58	D	42.2	0.62	D									
WB TH	44.8	0.16	D	36.4	0.17	D	34.0	0.18	C	35.5	0.14	D	33.9	0.20	C	34.6	0.25	C									
WB RT	47.5	0.37	D	38.7	0.34	D	34.4	0.21	C	65.7	0.92	E	64.4	0.92	E	43.2	0.68	D									
SB LT	62.1	0.94	E	74.1	1.02	F*	73.6	0.92	E	51.4	0.91	D	46.4	0.95	D	62.2	0.88	E									
SB TH/RT	0.9	0.43	A	2.2	0.69	A	42.8	0.60	D	1.0	0.45	A	1.3	0.70	A	41.1	0.58	D									
Overall	24.3	-	C	32.1	-	C	44.4	-	D	32.1	-	C	32.2	-	C	43.9	-	D									

* Denotes overcapacity condition, v/c ≥ 1.

4.5 Base Year 2027 Analysis

It is anticipated that by Base Year 2027, traffic will have increased over Base Year 2022 conditions due to the continued development of the Lahaina and Kaanapali regions. Actual growth within the study region may vary based upon the actual construction of the various nearby developments.

4.5.1 Base Year 2027 Intersection Analysis

By Base Year 2027 without the Project, traffic at the study intersections along Honoapiilani Highway is estimated to generally increase by an additional 5-10% for most parts along the corridor during the AM, PM and WE peak hours of traffic over Base Year 2022 conditions. The majority of study intersections are forecast to operate similar to existing conditions. Overall intersection delays generally increased by only 1-5 seconds at most study intersections from Base Year 2022 conditions. The majority of intersection movements operating at LOS E/F conditions during Base Year 2022 will continue to operate similarly in Base Year 2027.

<u>[3] Honoapiilani Highway/Akahele Street</u>

During the PM peak hour, the westbound left-turn movement is expected to experience a significant increase in delay with the increase in through traffic along Honoapiilani Highway. However, because the turning volume is low (10 vehicles), no mitigation is proposed.

<u>[7] Honoapiilani Highway/Kaanapali Parkway/Halelo Street</u>

With the proposed developments in the Kaanapali region, delay is expected to increase at this intersection. The intersection will worsen from overall LOS C(D)[C] during Base Year 2022 to LOS C(E)[C] during Base Year 2027. However, the major through movements will continue operating at LOS D or better during all peak hours. No mitigation is proposed beyond Base Year 2022 mitigation.

Figure 4.4 illustrates the Base Year 2027 forecast traffic volumes and LOS for the study intersection movements. Table 4.4 summarizes the Base Year 2027 LOS at the study intersections compared to Base Year 2022 conditions. LOS worksheets are provided in Appendix C. Full Base Year 2022 and 2027 roadway improvements are listed in Appendix D.

LEGEND

AA(AA)[AA] – AM(PM)[WE] PEAK HOUR OF TRAFFIC VOLUMES

X(X)[X] – AM(PM)[WE] LOS

Y – SIGNALIZED INTERSECTION Y, OVERALL AM/PM/WE LOS

NOTE:
THIS DRAWING IS FOR ILLUSTRATIVE PURPOSES ONLY. DO NOT USE FOR CONSTRUCTION.

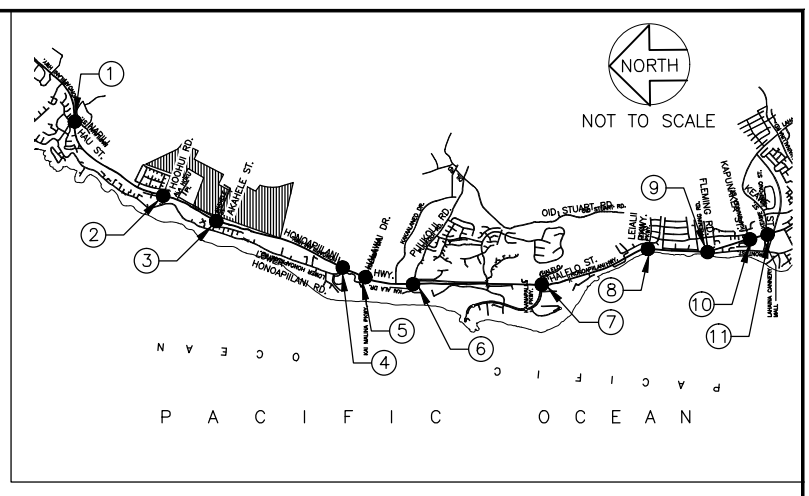

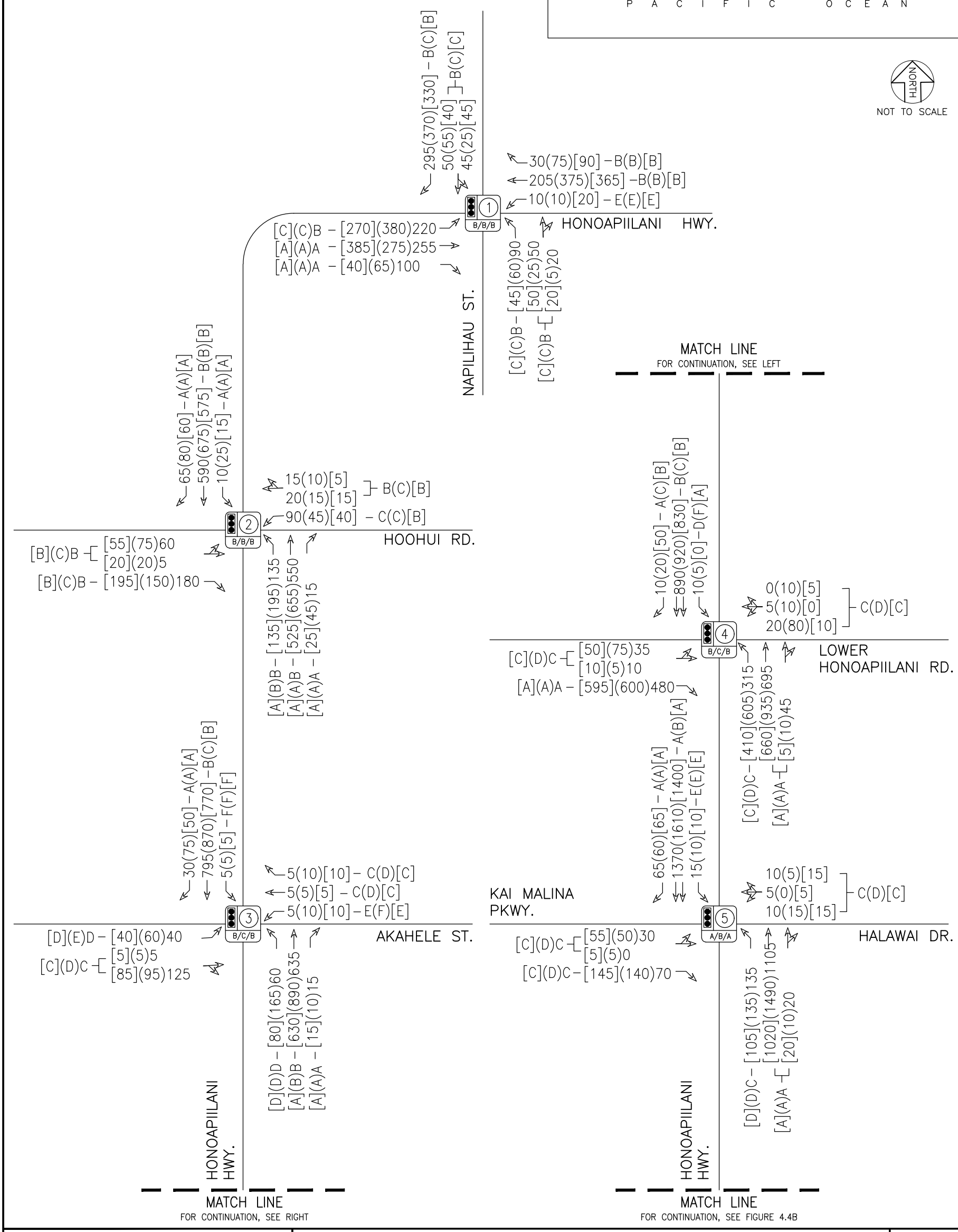

PULELEHUA	AUSTIN, TSUTSUMI & ASSOCIATES, INC. ENGINEERS, SURVEYORS • HONOLULU, HAWAII	FIGURE
	BASE YEAR 2027 LANE CONFIGURATION, VOLUMES AND LOS	4.4A

LEGEND

AA(AA)[AA] – AM(PM)[WE] PEAK HOUR OF TRAFFIC VOLUMES

X(X)[X] – AM(PM)[WE] LOS

X/X/X – SIGNALIZED INTERSECTION Y, OVERALL AM/PM/WE LOS

NOTE:
THIS DRAWING IS FOR ILLUSTRATIVE PURPOSES ONLY. DO NOT USE FOR CONSTRUCTION.

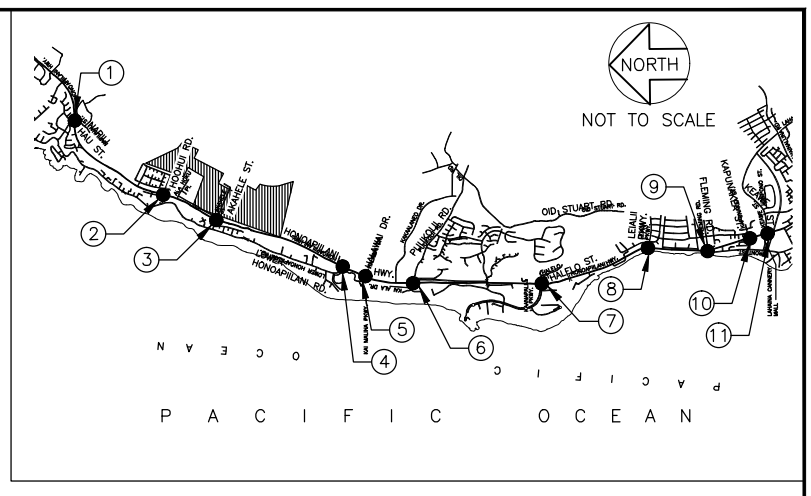

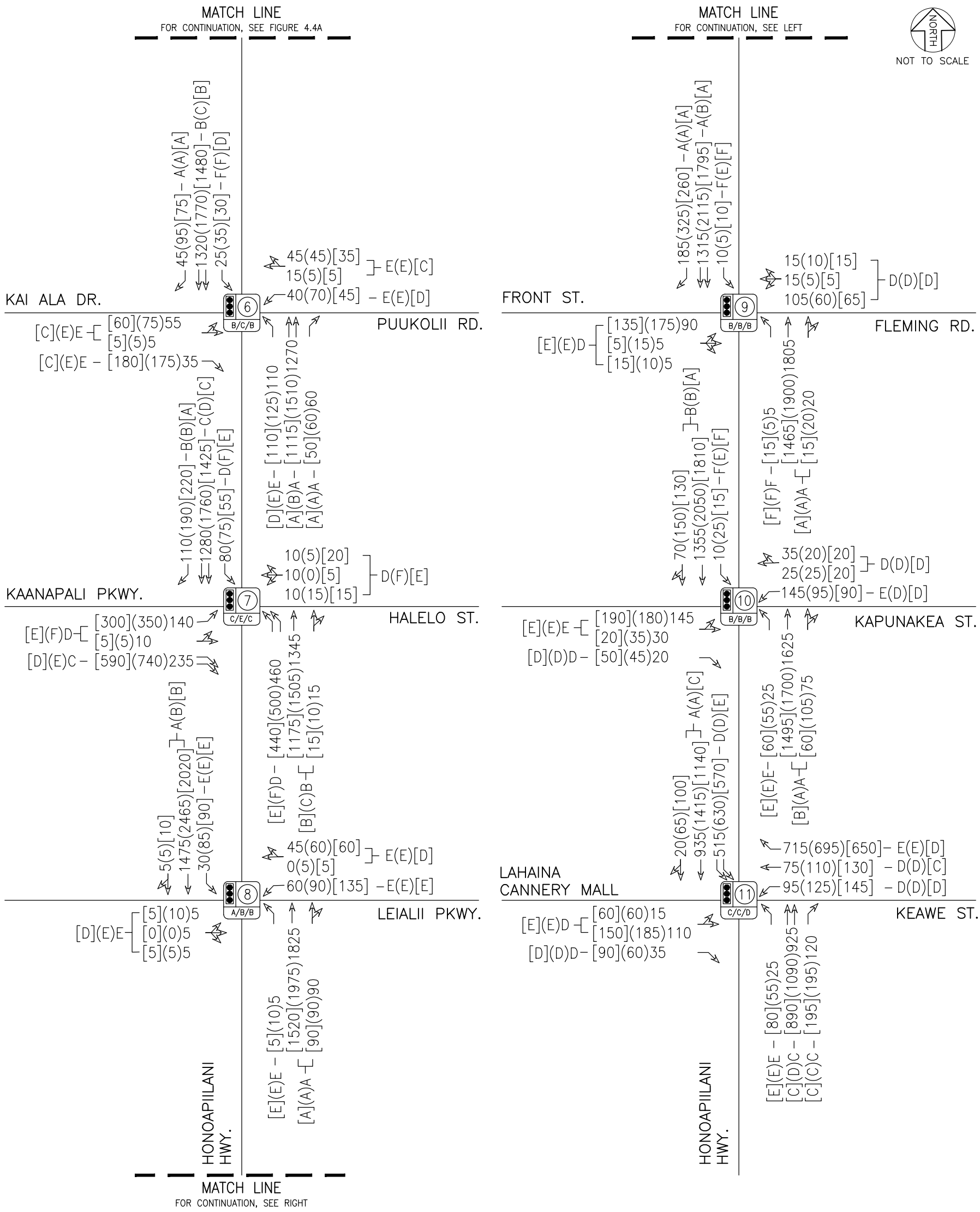

PULELEHUA	AUSTIN, TSUTSUMI & ASSOCIATES, INC. ENGINEERS, SURVEYORS • HONOLULU, HAWAII	FIGURE
	BASE YEAR 2027 LANE CONFIGURATION, VOLUMES AND LOS	4.4B

Table 4.4: Base Year 2022 with Mitigation and Base Year 2027 Level of Service Summary

	Base Year 2022 with Mitigation									Base Year 2027								
	AM			PM			WE			AM			PM			WE		
Intersection	HCM Delay	v/c Ratio	LOS	HCM Delay	v/c Ratio	LOS	HCM Delay	v/c Ratio	LOS	HCM Delay	v/c Ratio	LOS	HCM Delay	v/c Ratio	LOS	HCM Delay	v/c Ratio	LOS
1: Honoapiilani Highway & Napilihau Street																		
NB LT	18.9	0.75	B	19.7	0.82	B	19.5	0.77	B	18.9	0.75	B	23.2	0.84	C	22.0	0.79	C
NB TH	8.1	0.32	A	6.0	0.23	A	7.6	0.37	A	8.3	0.35	A	5.7	0.27	A	7.4	0.42	A
NB RT	6.9	0.08	A	5.2	0.05	A	5.9	0.03	A	6.9	0.08	A	4.7	0.05	A	5.4	0.03	A
EB LT/TH	15.0	0.26	B	20.4	0.29	C	17.8	0.28	B	15.0	0.26	B	24.2	0.32	C	20.7	0.32	C
EB RT	14.5	0.16	B	19.5	0.13	B	17.2	0.18	B	14.5	0.15	B	22.8	0.12	C	19.7	0.16	B
WB LT	17.4	0.30	B	22.8	0.28	C	19.5	0.18	B	17.4	0.30	B	27.2	0.32	C	22.7	0.21	C
WB TH/RT	14.7	0.22	B	19.4	0.13	B	17.7	0.27	B	14.7	0.22	B	22.9	0.14	C	20.3	0.29	C
SB LT	66.8	0.72	E	73.0	0.73	E	55.6	0.77	E	66.8	0.72	E	78.4	0.74	E	60.2	0.78	E
SB TH	12.9	0.31	B	17.9	0.60	B	15.2	0.57	B	14.2	0.47	B	18.7	0.66	B	15.5	0.62	B
SB RT	11.2	0.02	B	13.1	0.05	B	11.4	0.06	B	11.2	0.02	B	12.8	0.05	B	10.9	0.06	B
Overall	14.2	-	B	16.7	-	B	15.1	-	B	14.3	-	B	18.1	-	B	15.7	-	B
2: Honoapiilani Highway & Hoohui Road																		
NB LT	9.8	0.36	A	9.2	0.47	A	8.4	0.33	A	10.7	0.39	B	11.1	0.53	B	8.8	0.36	A
NB TH	10.8	0.64	B	9.3	0.66	A	8.9	0.57	A	10.7	0.64	B	9.4	0.68	A	8.9	0.61	A
NB RT	0.0	0.00	A	0.0	0.00	A	0.0	0.00	A	0.0	0.00	A	0.0	0.00	A	0.0	0.00	A
EB LT/TH	17.3	0.17	B	19.9	0.31	B	16.3	0.22	B	19.1	0.18	B	22.7	0.33	C	18.3	0.24	B
EB RT	16.3	0.06	B	18.4	0.07	B	15.6	0.10	B	18.0	0.06	B	20.9	0.06	C	17.4	0.08	B
WB LT	19.9	0.28	B	22.0	0.20	C	17.7	0.14	B	22.0	0.30	C	25.1	0.22	C	19.9	0.15	B
WB TH/RT	16.3	0.07	B	18.3	0.07	B	15.5	0.06	B	18.0	0.07	B	20.9	0.07	C	17.4	0.07	B
SB LT	9.7	0.03	A	8.1	0.07	A	8.0	0.04	A	9.5	0.03	A	8.1	0.07	A	7.7	0.04	A
SB TH	15.1	0.77	B	13.2	0.77	B	12.5	0.73	B	15.7	0.81	B	13.9	0.82	B	12.7	0.77	B
SB RT	9.5	0.05	A	8.0	0.06	A	8.1	0.04	A	9.2	0.04	A	7.6	0.06	A	7.5	0.04	A
Overall	13.3	-	B	11.8	-	B	11.1	-	B	13.8	-	B	12.6	-	B	11.4	-	B
3: Honoapiilani Highway & Akahele Street																		
NB LT	42.7	0.77	D	42.6	0.81	D	37.1	0.76	D	45.7	0.77	D	49.4	0.83	D	40.9	0.76	D
NB TH	10.6	0.65	B	13.0	0.76	B	10.0	0.60	A	10.0	0.63	B	13.8	0.77	B	9.8	0.63	A
NB RT	6.5	0.01	A	5.9	0.01	A	6.4	0.01	A	6.0	0.01	A	5.2	0.01	A	5.8	0.01	A
EB LT	44.0	0.72	D	52.9	0.77	D	42.6	0.71	D	49.7	0.74	D	59.0	0.77	E	49.1	0.74	D
EB TH/RT	24.0	0.08	C	32.8	0.04	C	23.8	0.06	C	27.2	0.07	C	38.8	0.05	D	27.5	0.05	C
WB LT	69.5	0.53	E	65.8	0.58	E	51.3	0.55	D	73.5	0.53	E	109.1	0.78	F	56.1	0.56	E
WB TH	25.3	0.03	C	35.5	0.03	D	24.8	0.03	C	28.7	0.03	C	42.2	0.04	D	28.7	0.03	C
WB RT	25.2	0.01	C	35.4	0.01	D	24.7	0.01	C	28.5	0.01	C	42.1	0.01	D	28.6	0.01	C
SB LT	112.0	0.71	F	126.5	0.72	F	110.8	0.70	F	116.5	0.71	F	134.9	0.72	F	116.1	0.71	F
SB TH	15.3	0.84	B	22.9	0.88	C	15.5	0.83	B	15.8	0.86	B	29.0	0.92	C	16.1	0.85	B
SB RT	7.8	0.02	A	10.6	0.05	B	8.3	0.03	A	7.3	0.02	A	9.9	0.05	A	7.8	0.04	A
Overall	15.7	-	B	21.5	-	C	15.8	-	B	15.9	-	B	25.2	-	C	16.1	-	B

Table 4.4: Base Year 2022 with Mitigation and Base Year 2027 Level of Service Summary Cont'd

	Base Year 2022 with Mitigation									Base Year 2027								
	AM			PM			WE			AM			PM			WE		
Intersection	HCM Delay	v/c Ratio	LOS	HCM Delay	v/c Ratio	LOS	HCM Delay	v/c Ratio	LOS	HCM Delay	v/c Ratio	LOS	HCM Delay	v/c Ratio	LOS	HCM Delay	v/c Ratio	LOS
4: Honoapiilani Highway & Lower Honoapiilani Road																		
NB LT	22.4	0.83	C	30.0	0.94	C	21.2	0.87	C	24.4	0.84	C	38.4	0.95	D	23.7	0.88	C
NB TH/RT	4.7	0.33	A	4.4	0.36	A	2.4	0.24	A	4.5	0.33	A	4.3	0.37	A	2.3	0.26	A
EB LT/TH	25.0	0.19	C	41.7	0.38	D	26.8	0.28	C	27.2	0.21	C	48.5	0.42	D	30.0	0.31	C
EB RT	0.0	0.00	A	0.0	0.00	A	0.0	0.00	A	0.0	0.00	A	0.0	0.00	A	0.0	0.00	A
WB LT/TH/RT	24.4	0.10	C	42.5	0.47	D	25.3	0.05	C	26.6	0.11	C	49.4	0.50	D	28.3	0.05	C
SB LT	50.7	0.74	D	87.3	0.72	F	0.0	0.00	A	53.6	0.74	D	95.5	0.73	F	0.0	0.00	A
SB TH	13.0	0.58	B	27.4	0.70	C	14.7	0.58	B	13.3	0.60	B	30.2	0.74	C	15.3	0.61	B
SB RT	9.2	0.00	A	19.5	0.01	B	11.0	0.03	B	9.1	0.00	A	20.6	0.01	C	10.9	0.03	B
Overall	12.0	-	B	20.9	-	C	12.6	-	B	12.5	-	B	24.2	-	C	13.2	-	B
5: Honoapiilani Highway & Kai Malina Parkway/Halawai Drive																		
NB LT	31.8	0.79	C	43.8	0.82	D	35.3	0.78	D	34.6	0.80	C	47.4	0.82	D	38.4	0.78	D
NB TH/RT	4.1	0.45	A	7.1	0.60	A	4.9	0.41	A	3.9	0.45	A	7.2	0.61	A	4.8	0.43	A
EB LT/TH	30.4	0.16	C	37.0	0.22	D	30.2	0.25	C	33.3	0.17	C	40.2	0.23	D	33.2	0.27	C
EB RT	30.3	0.01	C	36.2	0.03	D	29.5	0.04	C	33.1	0.01	C	39.3	0.03	D	32.4	0.04	C
WB LT/TH/RT	30.9	0.11	C	38.1	0.08	D	29.5	0.10	C	33.6	0.11	C	41.5	0.09	D	32.6	0.11	C
SB LT	53.5	0.78	D	73.1	0.78	E	59.7	0.75	E	57.5	0.79	E	77.9	0.78	E	63.9	0.76	E
SB TH	7.7	0.61	A	12.5	0.72	B	8.8	0.63	A	7.9	0.64	A	13.8	0.76	B	9.1	0.66	A
SB RT	4.5	0.04	A	6.4	0.04	A	5.1	0.04	A	4.4	0.04	A	6.4	0.04	A	4.9	0.04	A
Overall	8.1	-	A	12.1	-	B	9.3	-	A	8.2	-	A	12.9	-	B	9.5	-	A
6: Honoapiilani Highway & Kai Ala Drive/Puukolii Road																		
NB LT	74.0	0.85	E	78.1	0.86	E	39.8	0.78	D	74.2	0.85	E	77.9	0.86	E	41.8	0.78	D
NB TH	6.2	0.48	A	9.8	0.58	A	8.2	0.49	A	6.4	0.50	A	10.3	0.62	B	8.3	0.52	A
NB RT	3.8	0.04	A	5.4	0.04	A	5.5	0.03	A	3.8	0.04	A	5.3	0.04	A	5.3	0.03	A
EB LT/TH	68.7	0.38	E	67.2	0.37	E	31.3	0.23	C	68.7	0.38	E	67.2	0.37	E	33.3	0.24	C
EB RT	63.3	0.01	E	63.7	0.13	E	30.1	0.05	C	63.3	0.01	E	63.7	0.13	E	32.0	0.05	C
WB LT	75.0	0.39	E	78.4	0.54	E	34.6	0.21	C	75.0	0.39	E	78.4	0.54	E	36.9	0.23	D
WB TH/RT	64.1	0.10	E	62.5	0.03	E	29.9	0.03	C	64.1	0.10	E	62.5	0.03	E	31.8	0.03	C
SB LT	82.9	0.69	F	89.0	0.78	F	42.4	0.58	D	82.9	0.69	F	89.0	0.78	F	44.6	0.59	D
SB TH	10.0	0.52	B	18.1	0.73	B	13.6	0.73	B	10.6	0.56	B	20.1	0.79	C	14.4	0.76	B
SB RT	6.0	0.03	A	8.5	0.07	A	7.4	0.05	A	6.0	0.03	A	8.5	0.07	A	7.2	0.05	A
Overall	13.9	-	B	19.9	-	B	13.6	-	B	14.0	-	B	20.8	-	C	14.1	-	B

Table 4.4: Base Year 2022 with Mitigation and Base Year 2027 Level of Service Summary Cont'd

	Base Year 2022 with Mitigation									Base Year 2027								
	AM			PM			WE			AM			PM			WE		
Intersection	HCM Delay	v/c Ratio	LOS	HCM Delay	v/c Ratio	LOS	HCM Delay	v/c Ratio	LOS	HCM Delay	v/c Ratio	LOS	HCM Delay	v/c Ratio	LOS	HCM Delay	v/c Ratio	LOS
7: Honoapiilani Highway & Kaanapali Parkway/Halelo Street																		
NB LT	40.7	0.75	D	91.4	0.85	F	49.6	0.71	D	46.2	0.79	D	108.4	0.90	F	66.5	0.83	E
NB TH/RT	16.2	0.68	B	22.0	0.66	C	13.7	0.56	B	15.7	0.66	B	21.7	0.65	C	16.1	0.55	B
EB LT/TH	44.2	0.46	D	86.1	0.60	F	48.6	0.58	D	51.0	0.49	D	111.1	0.79	F	64.5	0.61	E
EB RT	28.3	0.08	C	63.9	0.51	E	36.4	0.34	D	32.1	0.08	C	74.3	0.63	E	44.3	0.44	D
WB LT/TH/RT	44.7	0.18	D	100.0	0.23	F	54.7	0.32	D	51.5	0.19	D	116.3	0.25	F	77.5	0.40	E
SB LT	46.2	0.57	D	112.3	0.72	F	53.9	0.50	D	53.2	0.60	D	139.3	0.76	F	76.4	0.58	E
SB TH	22.1	0.75	C	41.1	0.88	D	20.8	0.76	C	24.0	0.77	C	54.5	0.93	D	31.7	0.81	C
SB RT	9.8	0.08	A	8.2	0.11	A	6.9	0.13	A	10.3	0.10	B	11.3	0.16	B	9.2	0.18	A
Overall	23.7	-	C	44.8	-	D	24.1	-	C	25.5	-	C	56.2	-	E	34.5	-	C
8: Honoapiilani Highway & Leialii Parkway																		
NB LT	75.8	0.45	E	69.1	0.50	E	72.4	0.44	E	75.4	0.45	E	72.5	0.62	E	71.7	0.44	E
NB TH/RT	8.8	0.70	A	2.4	0.75	A	2.9	0.60	A	9.3	0.73	A	2.8	0.82	A	3.5	0.68	A
EB LT/TH/RT	58.6	0.06	E	57.0	0.07	E	50.0	0.03	D	58.6	0.06	E	57.0	0.07	E	50.0	0.03	D
WB LT	62.0	0.37	E	62.5	0.54	E	58.1	0.63	E	62.0	0.37	E	62.5	0.54	E	58.1	0.63	E
WB TH/RT	58.6	0.01	E	56.7	0.05	E	50.3	0.05	D	58.6	0.01	E	56.7	0.05	E	50.3	0.05	D
SB LT	68.8	0.52	E	66.2	0.78	E	76.2	0.79	E	68.8	0.52	E	66.2	0.78	E	76.2	0.79	E
SB TH/RT	5.2	0.51	A	13.3	0.83	B	10.2	0.70	B	5.6	0.54	A	19.1	0.91	B	12.8	0.78	B
Overall	9.1	-	A	10.8	-	B	11.0	-	B	9.4	-	A	13.9	-	B	12.2	-	B
9: Honoapiilani Highway & Front Street/Flemming Road																		
NB LT	89.8	0.73	F	96.3	0.74	F	87.9	0.84	F	88.0	0.73	F	93.8	0.74	F	85.3	0.84	F
NB TH/RT	7.6	0.67	A	1.9	0.71	A	16.3	0.50	B	8.0	0.70	A	2.5	0.77	A	7.5	0.58	A
EB LT/TH/RT	52.6	0.48	D	59.5	0.72	E	57.7	0.66	E	52.6	0.48	D	59.5	0.72	E	57.7	0.66	E
WB LT/TH/RT	54.3	0.61	D	49.7	0.24	D	52.3	0.32	D	54.3	0.61	D	49.7	0.24	D	52.3	0.32	D
SB LT	88.2	0.81	F	87.4	0.74	F	88.0	0.82	F	87.5	0.81	F	79.4	0.74	E	84.1	0.82	F
SB TH	4.9	0.48	A	11.8	0.79	B	7.7	0.64	A	5.2	0.51	A	13.8	0.87	B	8.8	0.72	A
SB RT	3.2	0.11	A	5.6	0.24	A	4.3	0.17	A	3.2	0.12	A	5.6	0.24	A	4.3	0.18	A
Overall	9.9	-	A	10.4	-	B	14.8	-	B	10.1	-	B	11.2	-	B	11.4	-	B
10: Honoapiilani Highway & Kapunakea Street																		
NB LT	74.7	0.79	E	67.6	0.79	E	71.9	0.79	E	74.0	0.79	E	72.5	0.79	E	71.1	0.78	E
NB TH/RT	1.3	0.66	A	1.3	0.71	A	2.8	0.58	A	1.4	0.69	A	1.2	0.76	A	12.2	0.66	B
EB LT/TH	64.2	0.72	E	62.3	0.75	E	59.7	0.74	E	64.2	0.72	E	70.5	0.80	E	59.7	0.74	E
EB RT	48.3	0.01	D	43.6	0.03	D	42.6	0.04	D	48.3	0.01	D	45.1	0.02	D	42.6	0.04	D
WB LT	55.1	0.51	E	46.9	0.29	D	45.3	0.26	D	55.1	0.51	E	48.5	0.31	D	45.3	0.26	D
WB TH/RT	49.3	0.10	D	44.1	0.08	D	42.9	0.07	D	49.3	0.10	D	45.7	0.09	D	42.9	0.07	D
SB LT	101.8	0.83	F	72.4	0.80	E	85.2	0.84	F	101.0	0.83	F	72.5	0.80	E	82.3	0.84	F
SB TH/RT	10.3	0.56	B	5.5	0.89	A	3.6	0.78	A	10.9	0.59	B	13.4	0.96	B	5.4	0.87	A
Overall	11.9	-	B	9.7	-	A	9.7	-	A	11.9	-	B	14.3	-	B	13.8	-	B

Table 4.4: Base Year 2022 with Mitigation and Base Year 2027 Level of Service Summary Cont'd

	Base Year 2022 with Mitigation									Base Year 2027								
	AM			PM			WE			AM			PM			WE		
Intersection	HCM Delay	v/c Ratio	LOS	HCM Delay	v/c Ratio	LOS	HCM Delay	v/c Ratio	LOS	HCM Delay	v/c Ratio	LOS	HCM Delay	v/c Ratio	LOS	HCM Delay	v/c Ratio	LOS
11: Honoapiilani Highway & Keawe Street																		
NB LT	79.8	0.79	E	69.3	0.78	E	64.0	0.79	E	79.8	0.79	E	69.3	0.78	E	64.0	0.79	E
NB TH	32.3	0.62	C	39.4	0.75	D	31.0	0.55	C	33.6	0.66	C	42.7	0.85	D	33.9	0.68	C
NB RT	23.6	0.08	C	28.6	0.21	C	25.9	0.20	C	23.8	0.08	C	27.6	0.21	C	25.7	0.20	C
EB LT/TH	47.7	0.35	D	63.6	0.79	E	61.5	0.77	E	47.3	0.34	D	71.3	0.84	E	61.6	0.77	E
EB RT	43.9	0.02	D	42.9	0.03	D	44.5	0.04	D	43.5	0.01	D	44.2	0.02	D	44.4	0.04	D
WB LT	38.3	0.29	D	40.7	0.58	D	42.2	0.62	D	38.1	0.29	D	44.9	0.63	D	42.2	0.62	D
WB TH	35.5	0.14	D	33.9	0.20	C	34.6	0.25	C	35.3	0.14	D	35.2	0.21	D	34.6	0.25	C
WB RT	65.7	0.92	E	64.4	0.92	E	43.2	0.68	D	76.2	0.95	E	79.9	0.97	E	43.7	0.70	D
SB LT	51.4	0.91	D	46.4	0.95	D	62.2	0.88	E	51.1	0.91	D	41.6	0.94	D	57.1	0.89	E
SB TH/RT	1.0	0.45	A	1.3	0.70	A	41.1	0.58	D	1.1	0.49	A	0.8	0.79	A	33.3	0.69	C
Overall	32.1	-	C	32.2	-	C	43.9	-	D	33.3	-	C	33.2	-	C	40.4	-	D

5. FUTURE YEAR SCENARIOS

5.1 Background

The Project is located upon approximately 304.255 acres of undeveloped land in Lahaina, bounded by Honoapiilani Highway to the west and the Kapalua Airport to the east. The Project proposes to provide 898 multi-family (MF) residential units, 2 single-family residential lots (for future residential development), an elementary school, a 10-acre park and two (2) retail centers, totaling 70,000 square feet (SF). In addition, a trail will be constructed just east and parallel to Honoapiilani Highway that will provide bike and pedestrian access to link the Project's development north and south of Mahinahina Gulch. The Project will be constructed in six (6) phases, but for purposes of this TIAR, will be analyzed as four (4) scenarios described below.

Although it is not part of this TIAR, the Project envisions future expansion at the north end of the Project site (currently identified as 2 single-family residential lots) with an additional 302 residential units, bringing the total residential unit count to 1,200 residential units. Future traffic analysis and roadway mitigation measures will be assessed at a later date.

Scenario 1 – Develop Phase 1 with a build-out of early 2022 that includes the following:

- 240 MF residential units north of Akahele Street, with direct access provided by two (2) new Project roadways, Road A and Road C, bisecting Akahele Street.

Scenario 2 - Develop Phase 2 with a build-out of early 2022 that includes the following:

- 240 MF residential units south of Akahele Street with direct access provided by Road A and Road C.
- Retail Area North consisting of 50,000 square feet (SF) of space located on the northeast corner of the Honoapiilani Highway/Akahele Street intersection.
- Retail Area South consisting of 20,000 SF of space located adjacent to Retail Area North on the southeast corner of the Honoapiilani Highway/Akahele Street intersection.
    - Access to Retail Area North and South will be provided by Road A. Retail Area North will also be serviced by a RIRO access via Honoapiilani Highway.
    - Based on the developer forecast absorption for the Retail Area North and South component, approximately 15,000 SF of retail space will be occupied by Year 2022, with subsequent occupancy occurring at a pace of 5,000 SF of retail space every 2 years thereafter. Therefore, full build-out and occupancy of Retail Areas North and South will likely occur well beyond Year 2022, but was assumed to be fully built out by Year 2022 for this TIAR.

Scenario 3 – Develop Phases 3-5 with a build-out of late 2022 that include the following:

- 100 MF residential units (Phase 3) south of Akahele Street, with access provided by Road C.
- 318 MF residential units (Phase 3 and Phase 4) south of Mahinahina Gulch, with access provided by a new Project roadway, Road J, intersecting Honoapiilani Highway south of Mahinahina Gulch.

- 2 single-family residential lots north of Akahele Street, with access provided by Road A and Road C.
- 10-acre park; for purposes of this TIAR, assumed two (2) practice fields south of Mahinahina Gulch, with access provided by Road J.

Scenario 4 – A future elementary school, to be planned/developed by the Department of Education (DOE). Since the development of the school is not in the direct controller of the Pulelehua development, the timeframe for this school has yet to be determined. For purposes of this TIAR, a forecast build-out of 2027 was assumed for the TIAR.

- Assumed 750-student elementary school, with access provided by Road A.

5.1.1 Travel Demand Estimations

The State of Hawaii Department of Transportation (HDOT) and Maui County provide various Transportation Demand Management (TDM) programs that promote the use of transit, walking, biking and alternative modes of transportation to reduce the use of single-occupant vehicles on roadways. These TDM measures have only been identified and conservatively assumed to yield NO vehicular reductions for Project generated traffic.

Maui County currently provides a bus system that offers several routes that connect the major areas in Maui. The Lahaina Islander Route #20 provides regional connectivity between Lahaina and Kahului. The Lahaina Villager Route #23, Kaanapali Islander Route #25 and Napili Islander Route #30 provide transportation within the towns of Lahaina, Kaanapali and Napili.

HDOT currently provides the Bike Plan Hawaii Master Plan, which identifies existing and proposed bicycle routes that could potentially be implemented in the future. In the vicinity of the Project, a signed shared roadway is currently provided along the 24.4 mile route along Honoapiilani Highway between Waiale Road in Wailuku and Fleming Beach Park in Kapalua. A signed shared roadway is also proposed along the 5.2 mile stretch of Lower Honoapiilani Highway from Lower Aloe Drive to Honoapiilani Highway.

5.1.2 Trip Generation

The Institute of Transportation Engineers (ITE) publishes a book based on empirical data compiled from a body of more than 4,250 trip generation studies submitted by public agencies, developers, consulting firms, and associations. This publication, titled Trip Generation Manual, 9th Edition, provides trip rates and/or formulae based on graphs that correlate vehicular trips with independent variables. The independent variables can range from Dwelling Units (DU) for single-family attached homes to Gross Floor Area (GFA) for commercial or office development. These trip rates/formulae and their associated directional distributions were used to estimate the increase in the number of vehicular trips generated by the proposed Project. The rates selected were based on the land use description.

The Project's mixture of residential and retail land uses interact to create vehicle trips that can be considered internal to the development. Calculation of internal trip capture rates was done using the ITE Trip Generation Handbook, 3rd Edition for retail and residential land uses and generally resulted in an approximate 16% internal capture reduction for the PM peak hour. A minimal 1% internal capture reduction was applied to AM peak hour and no reduction for WE peak hour. Pass-by trip reductions were also applied and based upon information within the ITE Trip Generation Handbook. As a conservative measure, a pass-by rate of 20% was applied to the retail component for the PM and WE peak hours of traffic. No pass-by reductions were

applied to the AM peak hour. See Tables 5.1 and 5.2 for Trip Generation formulae and projections for the Project.

5.1.3 Trip Distribution and Assignment

Trips generated by the Project were assigned throughout the study area generally based upon existing travel patterns. The traffic generated by the Project was added to the forecast Base Year 2022 and 2027 traffic volumes within the vicinity of the Project to constitute the traffic volumes for Future Year 2022 Scenario 1, 2 and 3 and Future Year 2027 Scenario 4 traffic conditions. Figures 5.1, 5.3, 5.6 and 5.8 illustrate the Project-generated trip distribution for Future Year 2022 Scenario 1, Future Year 2022 Scenario 2, Future Year 2022 Scenario 3 and Future Year 2027 Scenario 4, respectively.

Table 5.1: Trip Generation Rates

Land Use (ITE Code)	Independent Variable	AM Peak Hour		PM Peak Hour		WE Peak Hour	
		Trip Rate	% Enter	Trip Rate	% Enter	Trip Rate	% Enter
Single-Family Detached Housing (210)	Dwelling Units (DU)	[a]	26%	[b]	64%	[c]	54%
Low-Rise Apartment (221)	Dwelling Units (DU)	[d]	21%	[e]	65%	[f]	54%
Shopping Center (820)	1000 SQ FT	[g]	62%	[h]	48%	[i]	52%
Elementary School (520)	Students	0.45	55%	0.15	49%	0.00	0%
Soccer Complex (480)	Fields	1.12	57%	17.70	67%	30.34	48%

[a] T=0.70(X)+9.74

[b] LN(T)=0.90LN(X)+0.51

[c] T=0.89(X)+8.77

[d] LN(T)=0.82*LN(X)+0.23

[e] LN(T)=0.88*LN(X)+0.16

[f] LN(T)=0.82*LN(X)+0.41

[g] LN(T)=0.61*LN(X)+2.24

[h] LN(T)=0.67*LN(X)+3.31

[i] LN(T)=0.65*LN(X)+3.78

Table 5.2: Project-Generated Trips

	Land Use (ITE Code)	Variable	AM Peak Hour			PM Peak Hour			WE Peak Hour		
			Enter (vph)	Exit (vph)	Total (vph)	Enter (vph)	Exit (vph)	Total (vph)	Enter (vph)	Exit (vph)	Total (vph)
Scenario 1 (Early 20222)	Low-Rise Apartment (221)	240 DU	19	70	89	81	44	125	57	49	106
	Total NEW External Project Scenario 1Trips		**19**	**70**	**89**	**81**	**44**	**125**	**57**	**49**	**106**
Scenario 2 (Early 2022)	Low-Rise Apartment (221)	240 DU	18	70	88	80	43	124	57	49	106
	Shopping Center (820)	70000 SQ FT	78	48	125	226	245	472	361	333	694
		Subtotal	96	118	213	306	288	596	418	382	800
	Internal Capture (Residential)		(1)	(1)	(2)	(64)	(23)	(87)	0	0	0
	Internal Capture (Retail)		(1)	(1)	(2)	(23)	(64)	(87)	0	0	0
	Pass-by (Retail)		0	0	0	(45)	(45)	(90)	(67)	(67)	(134)
	Total NEW External Project Scenario 2 Trips		**94**	**116**	**210**	**175**	**156**	**332**	**351**	**315**	**666**
Scenario 3 (Late 2022)	Single-Family Detached Housing (210)	2 DU	3	8	11	2	1	3	6	5	11
	Low-Rise Apartment (221)	418 DU	33	122	155	141	76	217	100	85	185
	Soccer Complex (480)	2 Fields	1	1	2	15	21	35	35	26	61
	Total NEW External Project Scenario 3 Trips		**37**	**131**	**168**	**158**	**98**	**255**	**141**	**116**	**257**
Scenario 4 (2027)	Elementary School (520)	750 Students	186	152	338	55	58	113	0	0	0
		Subtotal	186	152	338	55	58	113	0	0	0
	Internal Capture (School)		(19)	(7)	(26)	(6)	(6)	(12)	0	0	0
	Total NEW External Project Scenario 4 Trips		**167**	**145**	**312**	**49**	**52**	**101**	**0**	**0**	**0**
Total NEW External Project Scenario 1 to 4 Trips			**317**	**462**	**779**	**463**	**350**	**813**	**549**	**480**	**1029**

5.2 Future Year 2022 Scenario 1 Analysis

By completion of Scenario 1 in Future Year 2022, the Project is projected to generate a total of 89(125)[106] new external trips during the AM(PM)[WE] peak hours of traffic. Trips generated by the Project are expected to result in growth along major roadways in the study area. All generated traffic will access the site via Honoapiilani Highway at its intersections with Akahele Street. Due to the relatively minimal traffic increases due to Scenario 1, regional traffic at the study intersections (those not providing direct access to the Project) along Honoapiilani Highway is estimated to increase overall by less than 5%, while local traffic at the study intersections (those providing direct access to the Project) along Honoapiilani Highway is estimated to increase overall by less than 10% from Base Year 2022 without the Project scenario, during the AM, PM and WE peak hours of traffic.

5.2.1 Future Year 2022 Scenario 1 Intersection Analysis

All study intersections are forecast to operate similar to Base Year 2022. The majority of intersection movements forecast to operate at LOS E/F for Base Year 2022 conditions will continue to operate similarly with Future Year 2022 Scenario 1 of the Project. The majority of high volume through movements only experienced delay increases ranging from 1-5 seconds.

<u>[3] Honoapiilani Highway/Akahele Street</u>

Since this intersection is the exclusive access from Honoapiilani Highway into the Project's Scenario 1 site, turning movements into and out of Akahele Street will increase. As a result, the intersection will worsen from Base Year 2022, but will continue to operate adequately at overall LOS B(C)[B] for the Future Year 2022 Scenario 1. Various left-turn movements will continue to operate at LOS E/F conditions during all peak hours, mainly due to those left-turn volumes remaining relatively low. It is recommended that the existing signal timing be optimized to accommodate turning movement increases.

Based on <u>A Policy on Geometric Design of Highways and Streets</u>, by the American Association of State Highway and Transportation Officials, dated 2011 (hereinafter referred to as the "AASHTO Green Book"), left-turn storage lane lengths at the Honoapiilani Highway/Akahele Street intersection were determined. See Table 5.3 for the recommended storage lane lengths. Based on the AASHTO Green Book, all anticipated left-turn storage at the intersection is currently accommodated, and no extensions will be required upon completion of Scenario 1.

<u>[14-15] Akahele Street intersection with Road A and Road C</u>

Akahele Street currently services very low existing traffic, with through volumes under 25 vehicles in each direction for all peak hours of traffic, resulting in lengthy gaps along Akahele Street. With the addition of the Project's bisecting Road A and Road C, forecast through traffic along Akahele Street will continue to operate with low through volumes (under 25 vehicles) at the Road C intersection and slightly higher through volumes, between 30-50 vehicles, at the Road A intersection during all peak hours.

Figures 5.1 illustrate the Project-generated trips for Future Year 2022 Scenario 1. Figure 5.2 illustrates the Future Year 2022 Scenario 1 forecast traffic volumes and LOS for the study intersection movements. Table 5.4 summarizes the Future Year 2022 Scenario 1 LOS at the study intersections compared to Base Year 2022 with mitigation conditions. LOS worksheets are provided in Appendix C.

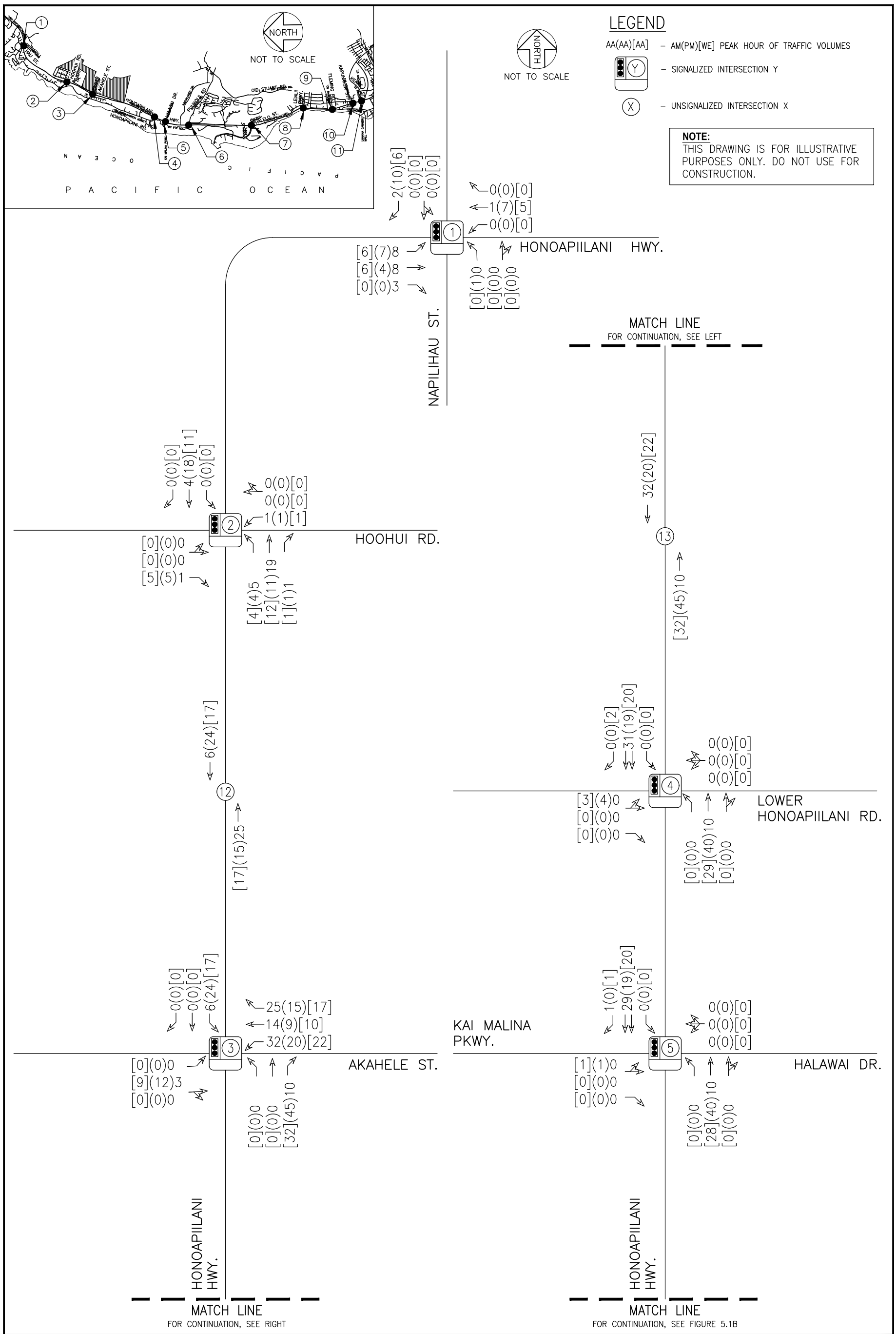

PULELEHUA

AUSTIN, TSUTSUMI & ASSOCIATES, INC.
ENGINEERS, SURVEYORS • HONOLULU, HAWAII

YEAR 2022 SCENARIO 1 PROJECT-GENERATED TRAFFIC

FIGURE 5.1A

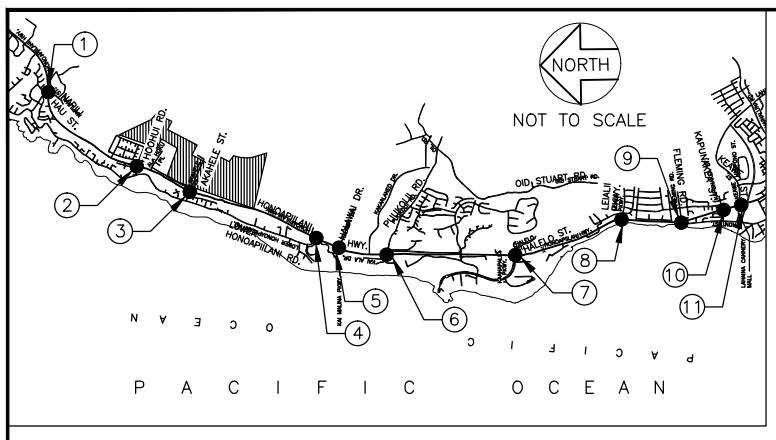

LEGEND

NORTH
NOT TO SCALE

AA(AA)[AA] – AM(PM)[WE] PEAK HOUR OF TRAFFIC VOLUMES

Y – SIGNALIZED INTERSECTION Y

X – UNSIGNALIZED INTERSECTION X

NOTE:
THIS DRAWING IS FOR ILLUSTRATIVE PURPOSES ONLY. DO NOT USE FOR CONSTRUCTION.

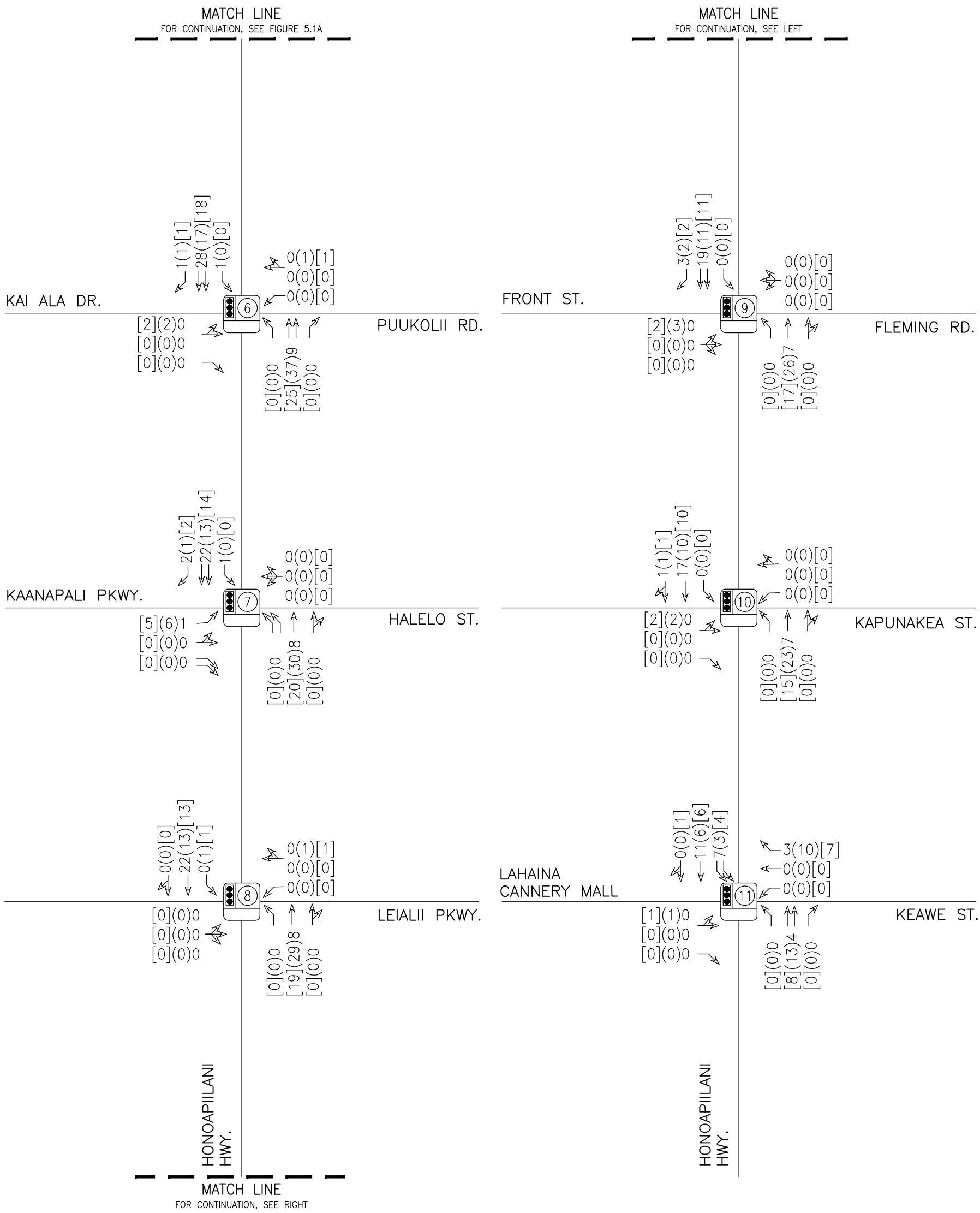

PULELEHUA

AUSTIN, TSUTSUMI & ASSOCIATES, INC.
ENGINEERS, SURVEYORS • HONOLULU, HAWAII

YEAR 2022 SCENARIO 1 PROJECT-GENERATED TRAFFIC

FIGURE
5.1B

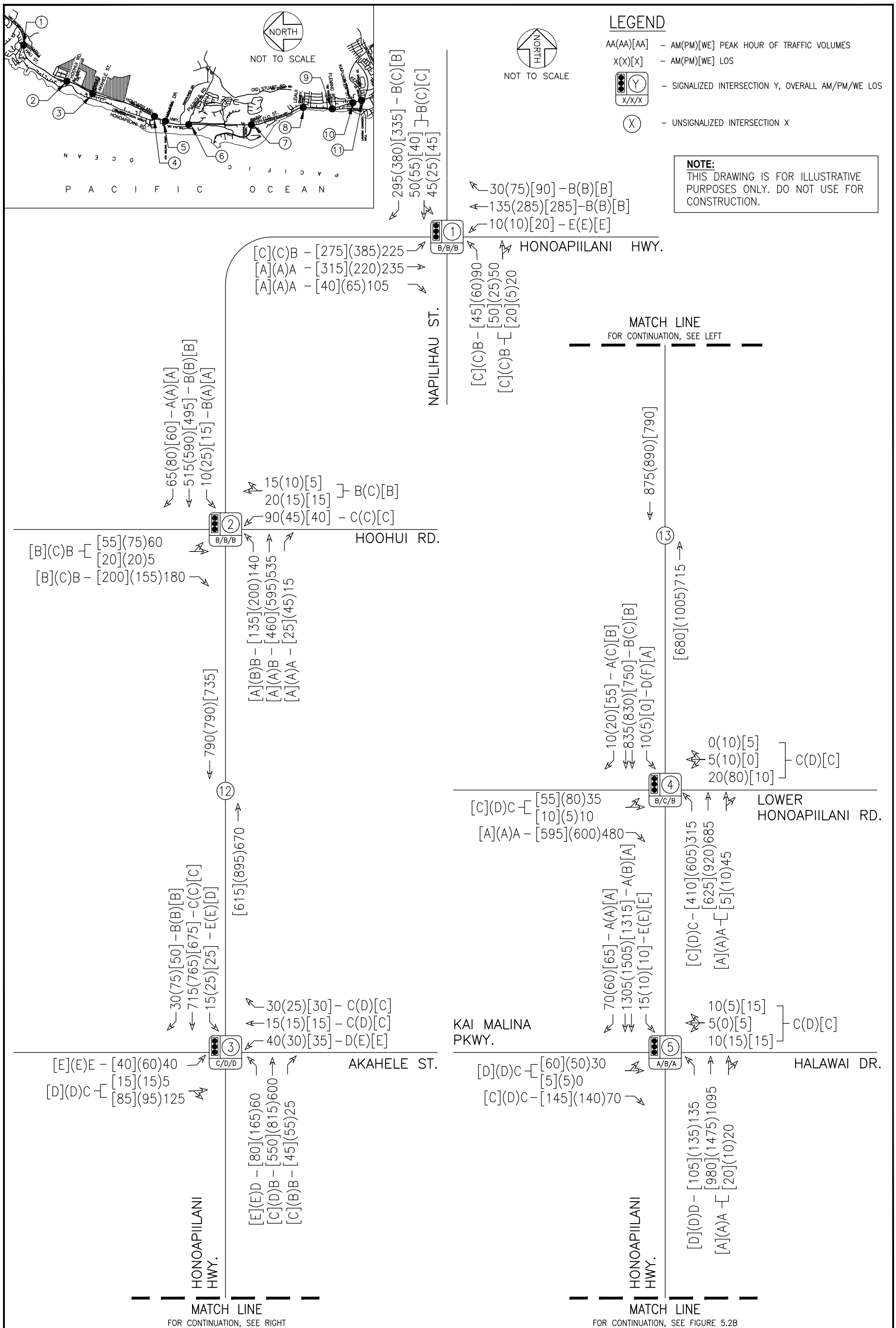

PULELEHUA

AUSTIN, TSUTSUMI & ASSOCIATES, INC.
ENGINEERS, SURVEYORS • HONOLULU, HAWAII

FUTURE YEAR 2022 SCENARIO 1 LANE CONFIGURATION, VOLUMES AND LOS

FIGURE 5.2A

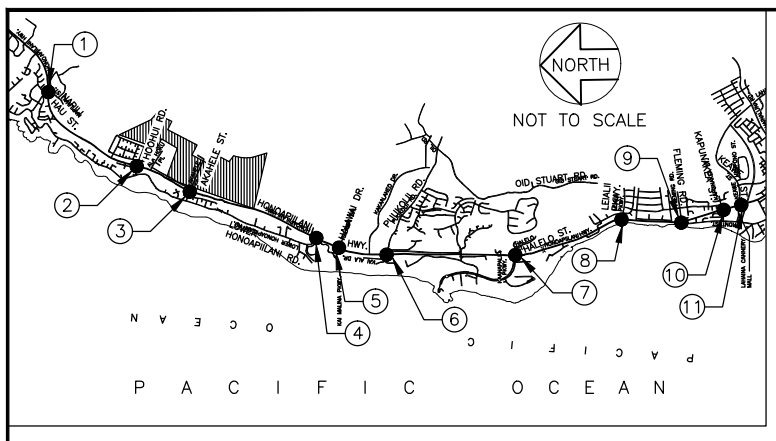

LEGEND

AA(AA)[AA] – AM(PM)[WE] PEAK HOUR OF TRAFFIC VOLUMES

X(X)[X] – AM(PM)[WE] LOS

Y / X/X/X – SIGNALIZED INTERSECTION Y, OVERALL AM/PM/WE LOS

X – UNSIGNALIZED INTERSECTION X

NOTE:
THIS DRAWING IS FOR ILLUSTRATIVE PURPOSES ONLY. DO NOT USE FOR CONSTRUCTION.

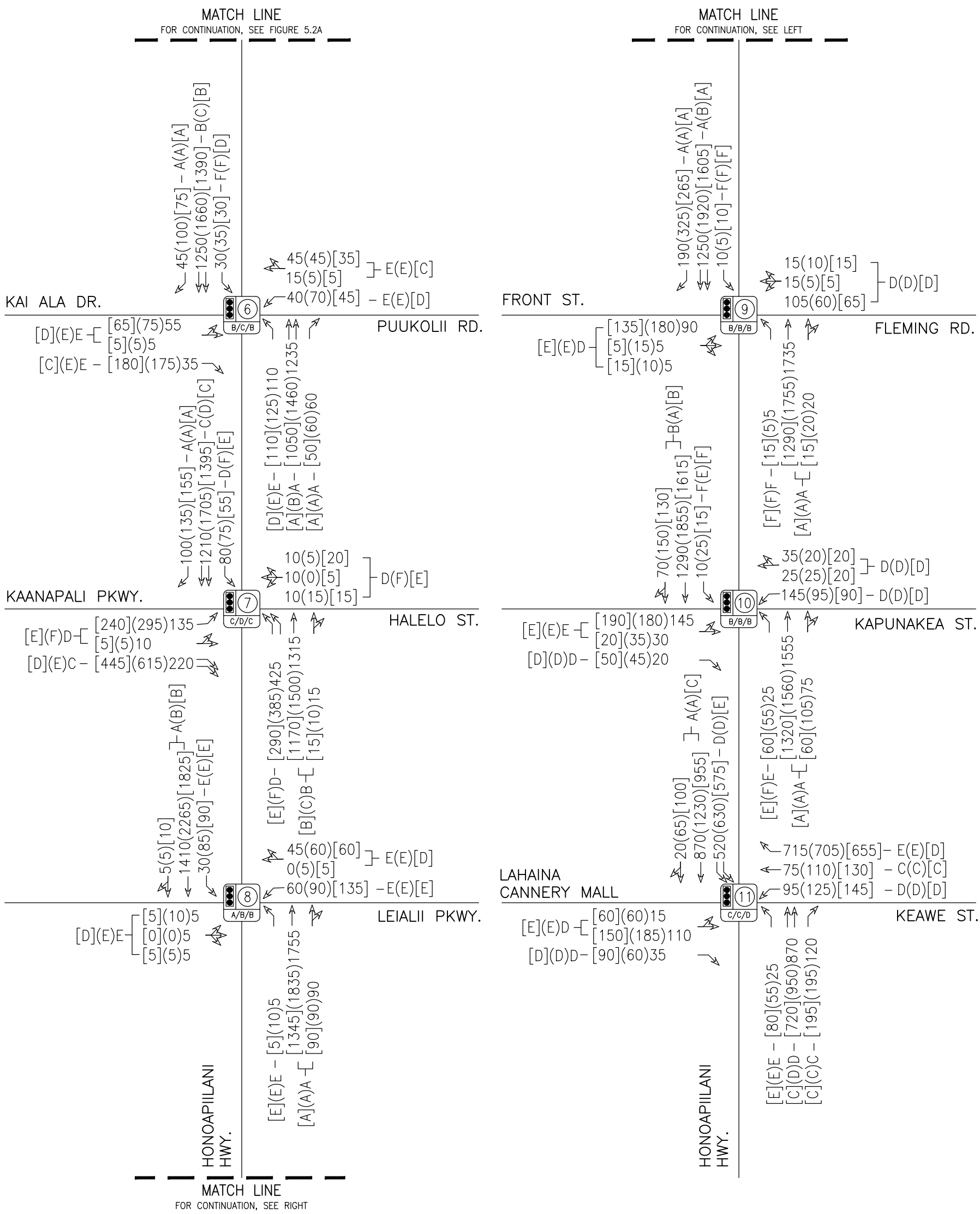

PULELEHUA	AUSTIN, TSUTSUMI & ASSOCIATES, INC. ENGINEERS, SURVEYORS • HONOLULU, HAWAII	FIGURE
	FUTURE YEAR 2022 SCENARIO 1 LANE CONFIGURATION, VOLUMES AND LOS	5.2B

Table 5.3: Future Year 2022 (Scenario 1)
Left-Turn Storage Lane Length Calculations

Honoapiilani Highway & Akahele Street Intersection								
			AASHTO					Recommended storage length [3]
Movement	Peak Hour	Design Volume per lane (veh)	Cycle Length (sec)	Cycles per Hour	Average Veh. per Cycle	Minimum Storage Length (1.5 factor)		
						Veh	Ft	
Northbound Left-turn lane	PM	165	100	36	5	7	**175**	Storage accommodated. Max queue could encroach into taper.
	WE	80	100	36	3	4	100	
Southbound Left-turn lane	PM	25	100	36	1	2	60	Storage accommodated
	WE	25	100	36	1	2	**60**	
Eastbound Left-turn lane	PM	60	100	36	2	3	**75**	Storage accommodated
	WE	40	100	36	2	2	60	
Westbound Left-turn lane	PM	30	100	36	1	2	60	Storage accommodated
	WE	35	100	36	1	2	**60**	

Notes:

1. AM peak hour omitted, since PM and WE left-turns were highest volumes.
2. Minimum storage length is 1.5 times the average number of vehicles per cycle; assume 1 vehicle length = 25 ft.
3. Recommended storage length is exclusive of taper length or deceleration length. To be verified upon design.
4. Cycle Length based on existing observation. Majority of cycles < 100 seconds.
5. Observations: Existing NBLT majority average 1-3 car queue (75 ft storage) with a few occassional maximum 7 car queue (175 ft storage)

Table 5.4: Base Year 2022 with Mitigation and Future Year 2022 Scenario 1 Level of Service Summary

Intersection	Base Year 2022 with Mitigation									Future Year 2022 Scenario 1								
	AM			PM			WE			AM			PM			WE		
	HCM Delay	v/c Ratio	LOS	HCM Delay	v/c Ratio	LOS	HCM Delay	v/c Ratio	LOS	HCM Delay	v/c Ratio	LOS	HCM Delay	v/c Ratio	LOS	HCM Delay	v/c Ratio	LOS
1: Honoapiilani Highway & Napilihau Street																		
NB LT	18.9	0.75	B	19.7	0.82	B	19.5	0.77	B	18.8	0.75	B	19.9	0.83	B	19.6	0.78	B
NB TH	8.1	0.32	A	6.0	0.23	A	7.6	0.37	A	8.1	0.32	A	5.9	0.23	A	7.5	0.37	A
NB RT	6.9	0.08	A	5.2	0.05	A	5.9	0.03	A	6.9	0.08	A	5.2	0.05	A	5.8	0.03	A
EB LT/TH	15.0	0.26	B	20.4	0.29	C	17.8	0.28	B	15.1	0.26	B	20.8	0.29	C	18.1	0.28	B
EB RT	14.5	0.16	B	19.5	0.13	B	17.2	0.18	B	14.6	0.16	B	19.8	0.13	B	17.5	0.17	B
WB LT	17.4	0.30	B	22.8	0.28	C	19.5	0.18	B	17.5	0.30	B	23.2	0.28	C	19.9	0.19	B
WB TH/RT	14.7	0.22	B	19.4	0.13	B	17.7	0.27	B	14.8	0.22	B	19.7	0.13	B	18.0	0.27	B
SB LT	66.8	0.72	E	73.0	0.73	E	55.6	0.77	E	67.0	0.72	E	73.4	0.73	E	56.1	0.77	E
SB TH	12.9	0.31	B	17.9	0.60	B	15.2	0.57	B	13.0	0.32	B	18.0	0.61	B	15.3	0.57	B
SB RT	11.2	0.02	B	13.1	0.05	B	11.4	0.06	B	11.3	0.02	B	13.2	0.05	B	11.4	0.06	B
Overall	14.2	-	B	16.7	-	B	15.1	-	B	14.3	-	B	16.8	-	B	15.2	-	B
2: Honoapiilani Highway & Hoohui Road																		
NB LT	9.8	0.36	A	9.2	0.47	A	8.4	0.33	A	9.8	0.37	A	9.6	0.49	A	8.4	0.33	A
NB TH	10.8	0.64	B	9.3	0.66	A	8.9	0.57	A	11.0	0.66	B	9.3	0.66	A	9.0	0.58	A
NB RT	0.0	0.00	A	0.0	0.00	A	0.0	0.00	A	0.0	0.00	A	0.0	0.00	A	0.0	0.00	A
EB LT/TH	17.3	0.17	B	19.9	0.31	B	16.3	0.22	B	17.3	0.17	B	20.4	0.32	C	16.5	0.22	B
EB RT	16.3	0.06	B	18.4	0.07	B	15.6	0.10	B	16.3	0.06	B	18.9	0.07	B	15.9	0.10	B
WB LT	19.9	0.28	B	22.0	0.20	C	17.7	0.14	B	20.0	0.28	B	22.6	0.21	C	17.9	0.14	B
WB TH/RT	16.3	0.07	B	18.3	0.07	B	15.5	0.06	B	16.3	0.07	B	18.9	0.07	B	15.7	0.06	B
SB LT	9.7	0.03	A	8.1	0.07	A	8.0	0.04	A	9.8	0.03	A	8.1	0.07	A	8.0	0.04	A
SB TH	15.1	0.77	B	13.2	0.77	B	12.5	0.73	B	15.2	0.77	B	13.4	0.78	B	12.5	0.74	B
SB RT	9.5	0.05	A	8.0	0.06	A	8.1	0.04	A	9.5	0.05	A	8.0	0.06	A	8.0	0.04	A
Overall	13.3	-	B	11.8	-	B	11.1	-	B	13.4	-	B	12.0	-	B	11.2	-	B
3: Honoapiilani Highway & Akahele Street																		
NB LT	42.7	0.77	D	42.6	0.81	D	37.1	0.76	D	44.7	0.77	D	44.8	0.81	D	39.3	0.76	D
NB TH	10.6	0.65	B	13.0	0.76	B	10.0	0.60	A	12.1	0.66	B	15.4	0.78	B	11.7	0.62	B
NB RT	6.5	0.01	A	5.9	0.01	A	6.4	0.01	A	7.4	0.02	A	7.0	0.04	A	7.6	0.03	A
EB LT	44.0	0.72	D	52.9	0.77	D	42.6	0.71	D	47.7	0.73	D	54.8	0.77	D	46.2	0.73	D
EB TH/RT	24.0	0.08	C	32.8	0.04	C	23.8	0.06	C	25.6	0.06	C	34.6	0.09	C	25.1	0.09	C
WB LT	69.5	0.53	E	65.8	0.58	E	51.3	0.55	D	47.7	0.73	D	63.7	0.74	E	45.7	0.70	D
WB TH	25.3	0.03	C	35.5	0.03	D	24.8	0.03	C	25.7	0.07	C	36.3	0.09	D	25.2	0.07	C
WB RT	25.2	0.01	C	35.4	0.01	D	24.7	0.01	C	25.4	0.01	C	35.8	0.01	D	24.9	0.01	C
SB LT	112.0	0.71	F	126.5	0.72	F	110.8	0.70	F	78.6	0.78	E	80.5	0.82	F	73.9	0.85	E
SB TH	15.3	0.84	B	22.9	0.88	C	15.5	0.83	B	16.8	0.85	B	25.0	0.89	C	17.1	0.84	B
SB RT	7.8	0.02	A	10.6	0.05	B	8.3	0.03	A	8.6	0.02	A	11.2	0.05	B	9.2	0.03	A
Overall	15.7	-	B	21.5	-	C	15.8	-	B	18.2	-	B	24.5	-	C	18.6	-	B
4: Honoapiilani Highway & Lower Honoapiilani Road																		
NB LT	22.4	0.83	C	30.0	0.94	C	21.2	0.87	C	22.7	0.83	C	30.0	0.94	C	21.6	0.87	C
NB TH/RT	4.7	0.33	A	4.4	0.36	A	2.4	0.24	A	4.7	0.34	A	4.5	0.37	A	2.5	0.25	A
EB LT/TH	25.0	0.19	C	41.7	0.38	D	26.8	0.28	C	25.3	0.20	C	42.1	0.41	D	27.3	0.31	C
EB RT	0.0	0.00	A	0.0	0.00	A	0.0	0.00	A	0.0	0.00	A	0.0	0.00	A	0.0	0.00	A
WB LT/TH/RT	24.4	0.10	C	42.5	0.47	D	25.3	0.05	C	24.8	0.11	C	42.6	0.47	D	25.6	0.05	C
SB LT	50.7	0.74	D	87.3	0.72	F	0.0	0.00	A	51.1	0.74	D	87.4	0.72	F	0.0	0.00	A
SB TH	13.0	0.58	B	27.4	0.70	C	14.7	0.58	B	13.1	0.59	B	27.7	0.71	C	15.0	0.59	B
SB RT	9.2	0.00	A	19.5	0.01	B	11.0	0.03	B	9.2	0.01	A	19.5	0.01	B	11.1	0.03	B
Overall	12.0	-	B	20.9	-	C	12.6	-	B	12.1	-	B	20.9	-	C	12.7	-	B

Table 5.4: Base Year 2022 with Mitigation and Future Year 2022 Scenario 1 Level of Service Summary Cont'd

Intersection	Base Year 2022 with Mitigation									Future Year 2022 Scenario 1								
	AM			PM			WE			AM			PM			WE		
	HCM Delay	v/c Ratio	LOS	HCM Delay	v/c Ratio	LOS	HCM Delay	v/c Ratio	LOS	HCM Delay	v/c Ratio	LOS	HCM Delay	v/c Ratio	LOS	HCM Delay	v/c Ratio	LOS
5: Honoapiilani Highway & Kai Malina Parkway/Halawai Drive																		
NB LT	31.8	0.79	C	43.8	0.82	D	35.3	0.78	D	32.8	0.79	C	44.5	0.82	D	36.0	0.78	D
NB TH/RT	4.1	0.45	A	7.1	0.60	A	4.9	0.41	A	4.0	0.45	A	7.2	0.61	A	5.0	0.42	A
EB LT/TH	30.4	0.16	C	37.0	0.22	D	30.2	0.25	C	31.4	0.17	C	37.6	0.23	D	30.9	0.27	C
EB RT	30.3	0.01	C	36.2	0.03	D	29.5	0.04	C	31.2	0.01	C	36.7	0.03	D	30.1	0.05	C
WB LT/TH/RT	30.9	0.11	C	38.1	0.08	D	29.5	0.10	C	31.8	0.11	C	38.7	0.08	D	30.1	0.11	C
SB LT	53.5	0.78	D	73.1	0.78	E	59.7	0.75	E	54.8	0.78	D	73.9	0.78	E	60.6	0.75	E
SB TH	7.7	0.61	A	12.5	0.72	B	8.8	0.63	A	7.8	0.62	A	12.7	0.73	B	8.9	0.64	A
SB RT	4.5	0.04	A	6.4	0.04	A	5.1	0.04	A	4.5	0.05	A	6.4	0.04	A	5.1	0.04	A
Overall	8.1	-	A	12.1	-	B	9.3	-	A	8.1	-	A	12.2	-	B	9.4	-	A
6: Honoapiilani Highway & Kai Ala Drive/Puukolii Road																		
NB LT	74.0	0.85	E	78.1	0.86	E	39.8	0.78	D	74.2	0.85	E	78.0	0.86	E	40.2	0.78	D
NB TH	6.2	0.48	A	9.8	0.58	A	8.2	0.49	A	6.4	0.48	A	10.0	0.60	B	8.3	0.50	A
NB RT	3.8	0.04	A	5.4	0.04	A	5.5	0.03	A	3.8	0.04	A	5.3	0.04	A	5.5	0.03	A
EB LT/TH	68.7	0.38	E	67.2	0.37	E	31.3	0.23	C	68.7	0.38	E	67.2	0.37	E	31.8	0.25	C
EB RT	63.3	0.01	E	63.7	0.13	E	30.1	0.05	C	63.3	0.01	E	63.7	0.13	E	30.3	0.05	C
WB LT	75.0	0.39	E	78.4	0.54	E	34.6	0.21	C	75.0	0.39	E	78.4	0.54	E	35.3	0.22	D
WB TH/RT	64.1	0.10	E	62.5	0.03	E	29.9	0.03	C	64.1	0.10	E	62.5	0.03	E	30.2	0.03	C
SB LT	82.9	0.69	F	89.0	0.78	F	42.4	0.58	D	84.8	0.76	F	89.0	0.78	F	42.8	0.58	D
SB TH	10.0	0.52	B	18.1	0.73	B	13.6	0.73	B	10.2	0.53	B	18.3	0.74	B	13.7	0.73	B
SB RT	6.0	0.03	A	8.5	0.07	A	7.4	0.05	A	6.0	0.03	A	8.6	0.08	A	7.4	0.05	A
Overall	13.9	-	B	19.9	-	B	13.6	-	B	14.1	-	B	20.0	-	B	13.8	-	B
7: Honoapiilani Highway & Kaanapali Parkway/Halelo Street																		
NB LT	40.7	0.75	D	91.4	0.85	F	49.6	0.71	D	41.7	0.75	D	92.7	0.85	F	50.6	0.71	D
NB TH/RT	16.2	0.68	B	22.0	0.66	C	13.7	0.56	B	16.0	0.68	B	22.4	0.67	C	13.8	0.57	B
EB LT/TH	44.2	0.46	D	86.1	0.60	F	48.6	0.58	D	45.4	0.46	D	87.8	0.61	F	49.6	0.59	D
EB RT	28.3	0.08	C	63.9	0.51	E	36.4	0.34	D	29.1	0.07	C	64.9	0.51	E	37.0	0.34	D
WB LT/TH/RT	44.7	0.18	D	100.0	0.23	F	54.7	0.32	D	45.9	0.18	D	101.4	0.23	F	55.7	0.32	E
SB LT	46.2	0.57	D	112.3	0.72	F	53.9	0.50	D	47.4	0.57	D	114.5	0.72	F	55.0	0.51	D
SB TH	22.1	0.75	C	41.1	0.88	D	20.8	0.76	C	22.2	0.75	C	41.8	0.88	D	21.0	0.76	C
SB RT	9.8	0.08	A	8.2	0.11	A	6.9	0.13	A	9.8	0.09	A	8.2	0.11	A	6.8	0.12	A
Overall	23.7	-	C	44.8	-	D	24.1	-	C	23.8	-	C	45.4	-	D	24.4	-	C
8: Honoapiilani Highway & Leialii Parkway																		
NB LT	75.8	0.45	E	69.1	0.50	E	72.4	0.44	E	75.8	0.45	E	74.2	0.50	E	72.4	0.44	E
NB TH/RT	8.8	0.70	A	2.4	0.75	A	2.9	0.60	A	8.8	0.70	A	2.4	0.75	A	3.0	0.61	A
EB LT/TH/RT	58.6	0.06	E	57.0	0.07	E	50.0	0.03	D	58.6	0.06	E	61.4	0.07	E	50.0	0.03	D
WB LT	62.0	0.37	E	62.5	0.54	E	58.1	0.63	E	62.0	0.37	E	67.4	0.56	E	58.1	0.63	E
WB TH/RT	58.6	0.01	E	56.7	0.05	E	50.3	0.05	D	58.6	0.01	E	60.9	0.05	E	50.3	0.05	D
SB LT	68.8	0.52	E	66.2	0.78	E	76.2	0.79	E	68.8	0.52	E	71.5	0.79	E	76.2	0.79	E
SB TH/RT	5.2	0.51	A	13.3	0.83	B	10.2	0.70	B	5.3	0.52	A	13.2	0.83	B	10.3	0.71	B
Overall	9.1	-	A	10.8	-	B	11.0	-	B	9.1	-	A	11.0	-	B	11.1	-	B

Table 5.4: Base Year 2022 with Mitigation and Future Year 2022 Scenario 1 Level of Service Summary Cont'd

Intersection	Base Year 2022 with Mitigation									Future Year 2022 Scenario 1								
	AM			PM			WE			AM			PM			WE		
	HCM Delay	v/c Ratio	LOS	HCM Delay	v/c Ratio	LOS	HCM Delay	v/c Ratio	LOS	HCM Delay	v/c Ratio	LOS	HCM Delay	v/c Ratio	LOS	HCM Delay	v/c Ratio	LOS
9: Honoapiilani Highway & Front Street/Flemming Road																		
NB LT	89.8	0.73	F	96.3	0.74	F	87.9	0.84	F	89.7	0.73	F	102.8	0.75	F	87.3	0.84	F
NB TH/RT	7.6	0.67	A	1.9	0.71	A	16.3	0.50	B	7.7	0.67	A	2.2	0.71	A	6.7	0.51	A
EB LT/TH/RT	52.6	0.48	D	59.5	0.72	E	57.7	0.66	E	52.6	0.48	D	65.1	0.74	E	57.7	0.66	E
WB LT/TH/RT	54.3	0.61	D	49.7	0.24	D	52.3	0.32	D	54.3	0.61	D	53.0	0.24	D	52.3	0.32	D
SB LT	88.2	0.81	F	87.4	0.74	F	88.0	0.82	F	88.0	0.81	F	93.6	0.75	F	87.7	0.82	F
SB TH	4.9	0.48	A	11.8	0.79	B	7.7	0.64	A	5.0	0.49	A	12.5	0.79	B	7.8	0.64	A
SB RT	3.2	0.11	A	5.6	0.24	A	4.3	0.17	A	3.2	0.12	A	5.9	0.23	A	4.3	0.18	A
Overall	9.9	-	A	10.4	-	B	14.8	-	B	9.9	-	A	11.1	-	B	11.1	-	B
10: Honoapiilani Highway & Kapunakea Street																		
NB LT	74.7	0.79	E	67.6	0.79	E	71.9	0.79	E	74.6	0.79	E	87.9	0.82	F	71.7	0.79	E
NB TH/RT	1.3	0.66	A	1.3	0.71	A	2.8	0.58	A	1.3	0.66	A	1.3	0.71	A	2.9	0.59	A
EB LT/TH	64.2	0.72	E	62.3	0.75	E	59.7	0.74	E	64.2	0.72	E	68.9	0.77	E	57.5	0.73	E
EB RT	48.3	0.01	D	43.6	0.03	D	42.6	0.04	D	48.3	0.01	D	47.1	0.03	D	42.3	0.04	D
WB LT	55.1	0.51	E	46.9	0.29	D	45.3	0.26	D	55.1	0.51	E	50.6	0.30	D	44.9	0.26	D
WB TH/RT	49.3	0.10	D	44.1	0.08	D	42.9	0.07	D	49.3	0.10	D	47.7	0.08	D	42.7	0.07	D
SB LT	101.8	0.83	F	72.4	0.80	E	85.2	0.84	F	101.7	0.83	F	77.1	0.79	E	85.5	0.84	F
SB TH/RT	10.3	0.56	B	5.5	0.89	A	3.6	0.78	A	10.5	0.56	B	5.1	0.88	A	7.8	0.78	A
Overall	11.9	-	B	9.7	-	A	9.7	-	A	11.9	-	B	10.2	-	B	11.7	-	B
11: Honoapiilani Highway & Keawe Street																		
NB LT	79.8	0.79	E	69.3	0.78	E	64.0	0.79	E	79.8	0.79	E	79.7	0.78	E	64.0	0.79	E
NB TH	32.3	0.62	C	39.4	0.75	D	31.0	0.55	C	32.5	0.62	C	40.5	0.74	D	31.0	0.55	C
NB RT	23.6	0.08	C	28.6	0.21	C	25.9	0.20	C	23.7	0.08	C	29.7	0.22	C	25.9	0.20	C
EB LT/TH	47.7	0.35	D	63.6	0.79	E	61.5	0.77	E	47.7	0.35	D	59.0	0.75	E	61.6	0.77	E
EB RT	43.9	0.02	D	42.9	0.03	D	44.5	0.04	D	43.9	0.02	D	44.4	0.04	D	44.4	0.04	D
WB LT	38.3	0.29	D	40.7	0.58	D	42.2	0.62	D	38.4	0.29	D	46.9	0.62	D	42.2	0.62	D
WB TH	35.5	0.14	D	33.9	0.20	C	34.6	0.25	C	35.6	0.14	D	37.0	0.21	D	34.6	0.25	C
WB RT	65.7	0.92	E	64.4	0.92	E	43.2	0.68	D	65.7	0.92	E	67.7	0.92	E	43.7	0.70	D
SB LT	51.4	0.91	D	46.4	0.95	D	62.2	0.88	E	51.3	0.91	D	48.3	0.94	D	58.0	0.89	E
SB TH/RT	1.0	0.45	A	1.3	0.70	A	41.1	0.58	D	1.0	0.45	A	1.3	0.69	A	30.7	0.59	C
Overall	32.1	-	C	32.2	-	C	43.9	-	D	32.0	-	C	33.2	-	C	39.9	-	D
14: Road A & Akahele Street																		
NB LT/TH/RT										9.4	0.03	A	9.8	0.03	A	9.7	0.03	A
EB LT										7.4	0.00	A	7.4	0.02	A	7.4	0.01	A
WB LT										7.3	0.00	A	7.4	0.00	A	7.4	0.00	A
SB LT/TH/RT										9.0	0.04	A	9.3	0.03	A	9.2	0.03	A
Overall										3.4	-	-	3.2	-	-	3.0	-	-
15: Road C & Akahele Street																		
NB LT/TH/RT										9.0	0.01	A	9.4	0.04	A	9.4	0.04	A
EB LT/TH/RT										7.3	0.00	A	7.3	0.01	A	7.3	0.01	A
WB LT/TH/RT										7.3	0.00	A	7.3	0.00	A	7.3	0.00	A
SB LT/TH/RT										8.8	0.03	A	9.0	0.02	A	9.0	0.02	A
Overall										4.2	-	-	4.2	-	-	4.2	-	-

5.3 Future Year 2022 Scenario 2 Analysis

By completion of Scenario 2 in Future Year 2022, the Project is projected to generate a total of 210(332)[666] new external trips during the AM(PM)[WE] peak hours of traffic. Trips generated by the Project are expected to result in growth along major roadways in the study area. Traffic will access the site via Honoapiilani Highway at its intersections with Akahele Street and the Project's proposed RIRO driveway for Retail Area North.

By Future Year 2022 WITH the cumulative increases of Project Scenarios 1 and 2, regional traffic at the study intersections (those not providing direct access to the Project) along Honoapiilani Highway is estimated to increase overall by approximately 5-15%, while local traffic at the study intersections (those providing direct access to the Project) along Honoapiilani Highway is estimated to increase overall by approximately 10-40% from Base Year 2022 without the Project scenario, during the AM, PM and WE peak hours of traffic.

5.3.1 Future Year 2022 Scenario 2 Intersection Analysis

All study intersections are forecast to operate similar to Future Year 2022 Scenario 1 with the exception of the Honoapiilani Highway/Akahele Street intersection described further below. The majority of intersection movements forecast to operate at LOS E/F for Future Year 2022 Scenario 1 conditions will continue to operate similarly with Future Year 2022 Scenario 2 of the Project. The majority of high volume through movements only experienced delay increases ranging from 1-5 seconds.

<u>[3] Honoapiilani Highway/Akahele Street</u>

Since this intersection is the primary access from Honoapiilani Highway into the Project's Scenario 2 site, turning movements into and out of Akahele Street will increase. As a result, the intersection will worsen, but operate adequately from an overall LOS B(C)[B] during the Future Year 2022 Scenario 1 condition to an overall LOS C(D)[C] for the Future Year 2022 Scenario 2. Various left-turn movements will operate at LOS E conditions during all peak hours, due to the long cycle length and increased turning movements at the intersection. However, all movements will continue to operate under capacity. It is recommended that the existing signal timing be optimized to accommodate turning movement increases.

Based on the AASHTO Green Book, left-turn storage lane lengths at the Honoapiilani Highway/Akahele Street intersection were determined. See Table 5.5 for the recommended storage lane lengths. Based on the AASHTO Green Book, the following is recommended. Note, additional taper length and/or deceleration length to be provided/verified upon design:

- Northbound left-turn lane → Lengthen left-turn lane to provide at least 275 feet of storage space.
- Southbound left-turn lane → Lengthen left-turn lane to provide at least 275 feet of storage space.
- Westbound left-turn lane → Lengthen left-turn lane to provide at least 300 feet of storage space.

[12] Honoapiilani Highway/Retail Area North RIRO

The new RIRO access along Honoapiilani Highway, north of Akahele Street, was analyzed as a stop-controlled intersection with stop control on the westbound right-turn movement out of Retail Area North. The westbound right-turn movement is expected to operate adequately with LOS C or better during all peak hours. It is recommended that a northbound right-turn deceleration lane be provided for entry into Retail Area North. Based on the AASHTO Green Book, the following is recommended:

- Northbound right-turn lane → Provide at least 100 feet of storage space. Additional taper length and/or deceleration length to be provided based upon design and constraints related to access location to nearby Honoapiilani Highway/Akahele Street intersection. Based on AASHTO Green Book, 425 feet accommodates full deceleration length with a design speed of 50 mph.

[14-15] Akahele Street intersection with Road A and Road C

With the completion of Scenario 2, volumes along Akahele Street are expected to increase. However, the roadway will continue to operate with low through volumes (under 25 vehicles) at the Road C intersection and slightly higher through volumes, between 50-150 vehicles, at the Road A intersection during all peak hours. The 50-150 vehicles traveling through the Road A intersection will still yield lengthy gaps in throughput traffic along Akahele Street, eliminating occurrences of long queues for opposing left-turn movements turning from Akahele Street. However, exclusive left-turn storage lanes should be considered to remove left-turns from the through lanes on Akahele Street.

During the WE peak hour, the northbound shared left-turn/through/right-turn lane on Road A is expected to operate at LOS E due to the high left-turn volumes and the high volumes on Akahele Street. However, as noted above, lengthy gaps are still expected along Akahele Street as a result of the nearby Honoapiilani Highway/Akahele Street signal.

Figure 5.3 illustrates the Project-generated trips for Future Year 2022 Scenario 2. Figure 5.4 illustrates the Future Year 2022 Scenario 2 forecast traffic volumes and LOS for the study intersection movements. Figure 5.5 illustrates the Future Year 2022 Scenario 2 forecast traffic volumes, LOS and intersection laneage along Akahele Street and at the Project Retail Area North RIRO access. Table 5.6 summarizes the Future Year 2022 Scenario 2 LOS at the study intersections compared to Base Year 2022 with mitigation and Future Year 2022 Scenario 1 conditions. LOS worksheets are provided in Appendix C.

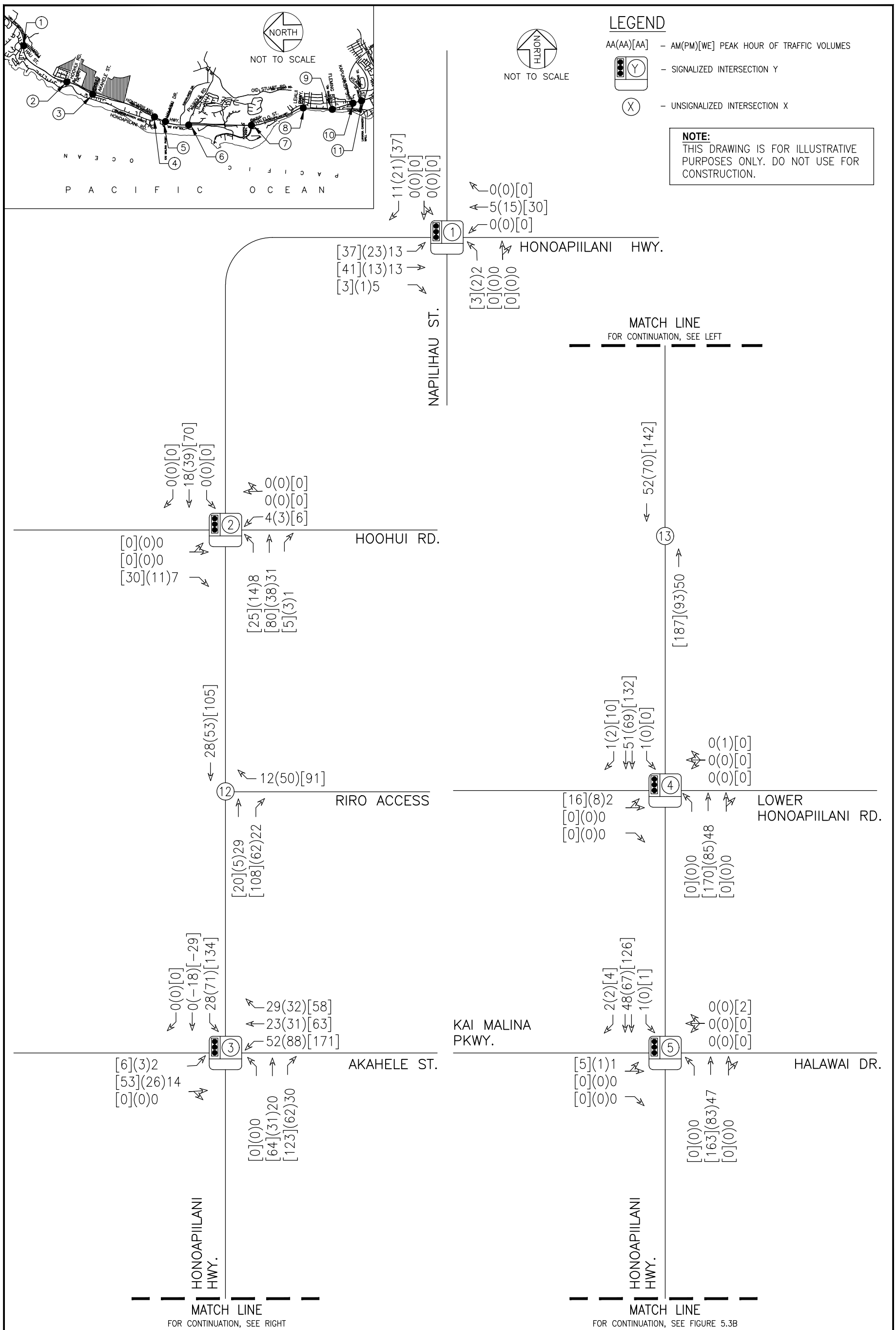

PULELEHUA

AUSTIN, TSUTSUMI & ASSOCIATES, INC.
ENGINEERS, SURVEYORS • HONOLULU, HAWAII

YEAR 2022 SCENARIO 2 PROJECT-GENERATED TRAFFIC

FIGURE 5.3A

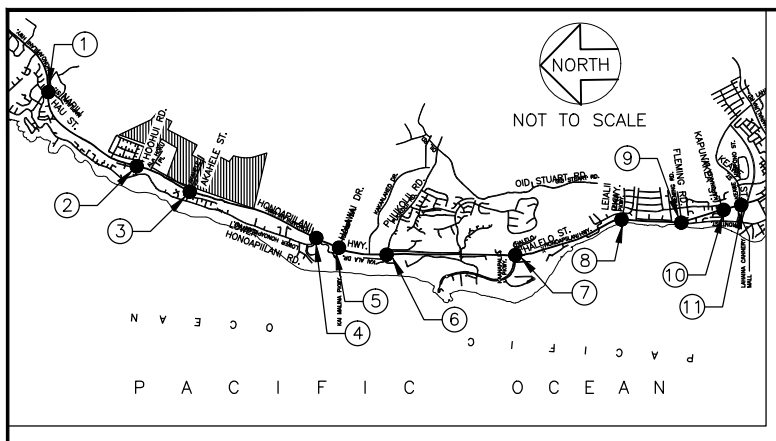

LEGEND

NORTH
NOT TO SCALE

AA(AA)[AA] – AM(PM)[WE] PEAK HOUR OF TRAFFIC VOLUMES

Y – SIGNALIZED INTERSECTION Y

X – UNSIGNALIZED INTERSECTION X

NOTE:
THIS DRAWING IS FOR ILLUSTRATIVE PURPOSES ONLY. DO NOT USE FOR CONSTRUCTION.

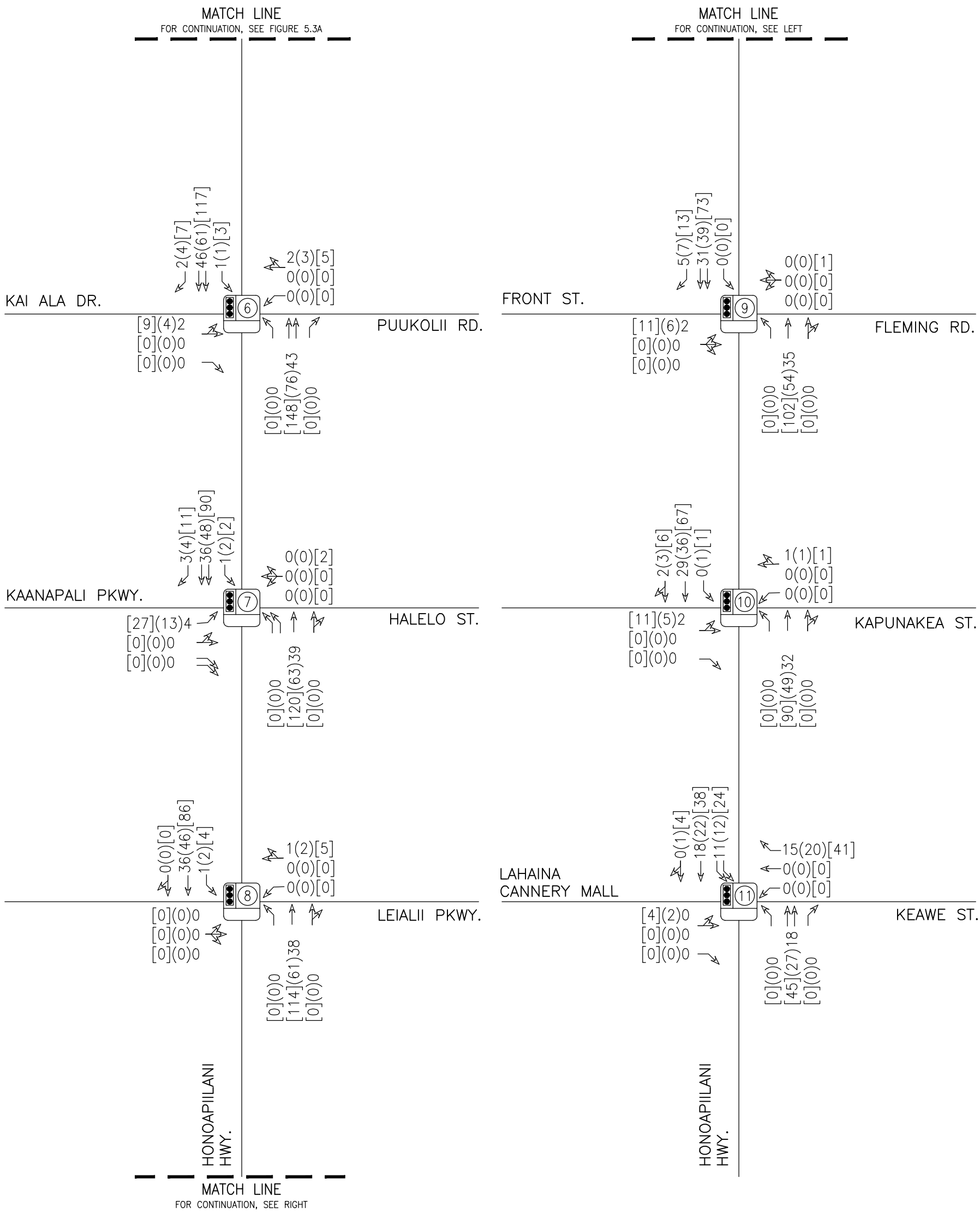

PULELEHUA	AUSTIN, TSUTSUMI & ASSOCIATES, INC. ENGINEERS, SURVEYORS • HONOLULU, HAWAII	FIGURE
	YEAR 2022 SCENARIO 2 PROJECT-GENERATED TRAFFIC	5.3B

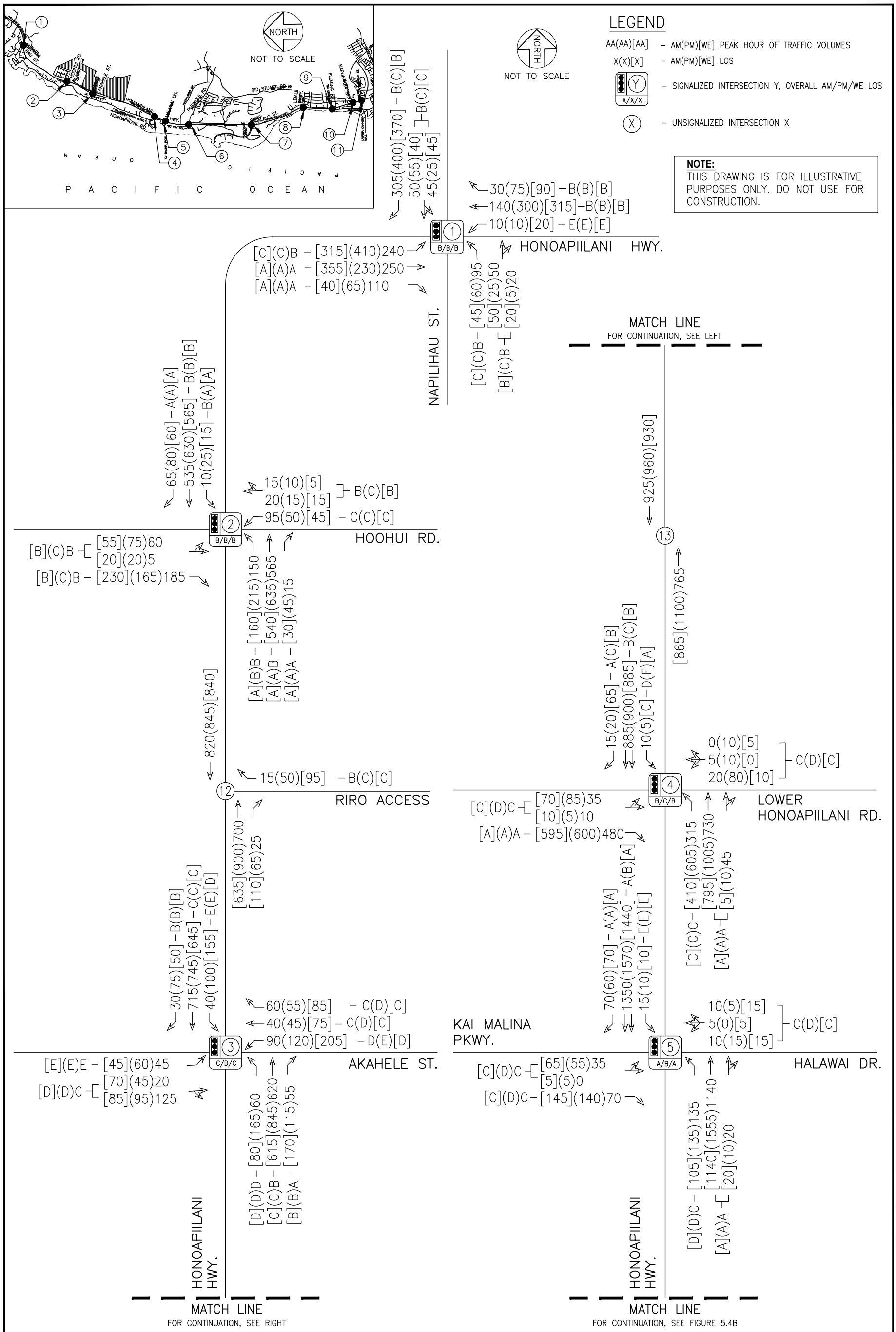

PULELEHUA

AUSTIN, TSUTSUMI & ASSOCIATES, INC.
ENGINEERS, SURVEYORS • HONOLULU, HAWAII

FUTURE YEAR 2022 SCENARIO 2 LANE CONFIGURATION, VOLUMES AND LOS

FIGURE 5.4A

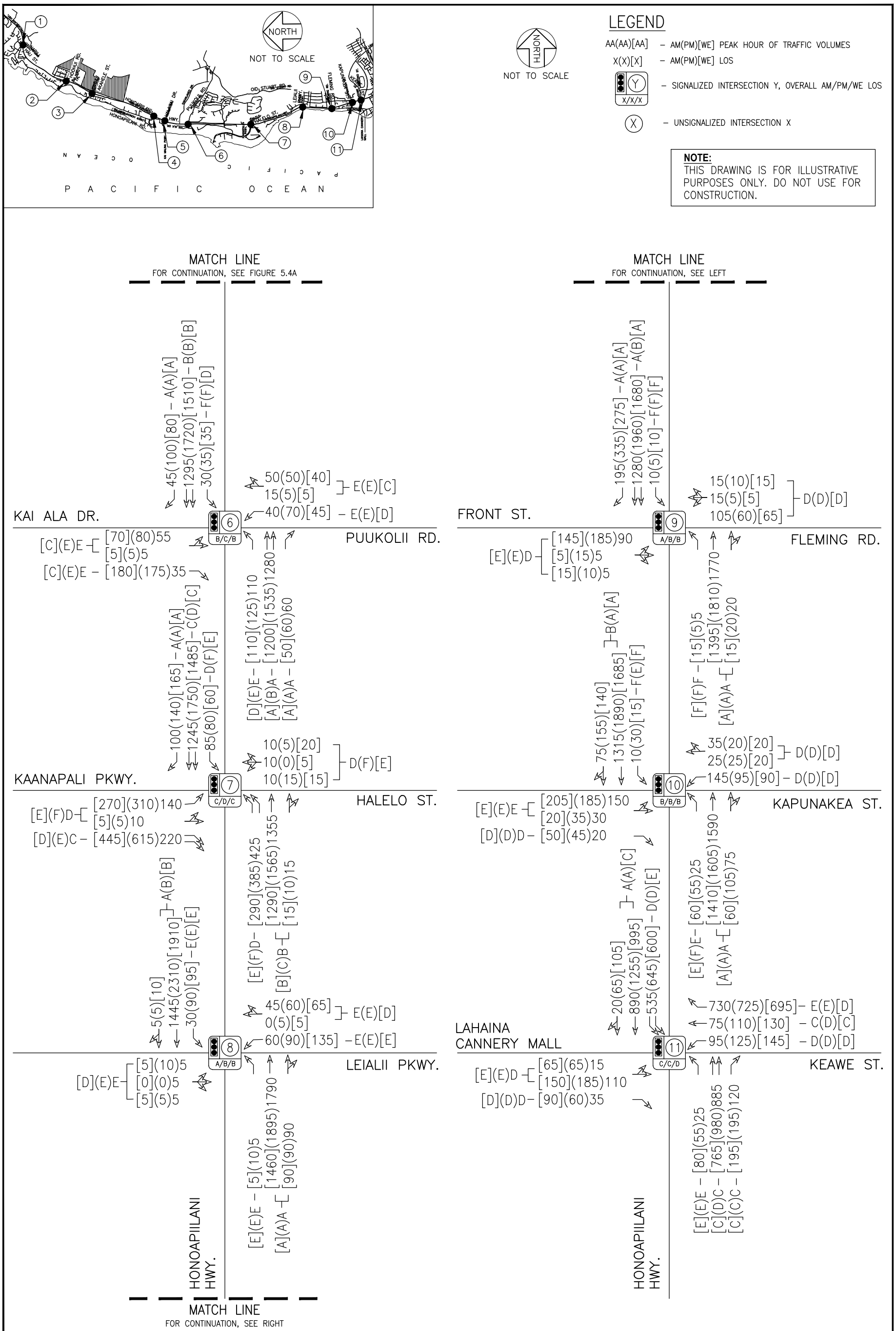

PULELEHUA

AUSTIN, TSUTSUMI & ASSOCIATES, INC.
ENGINEERS, SURVEYORS • HONOLULU, HAWAII

FUTURE YEAR 2022 SCENARIO 2 LANE CONFIGURATION, VOLUMES AND LOS

FIGURE
5.4B

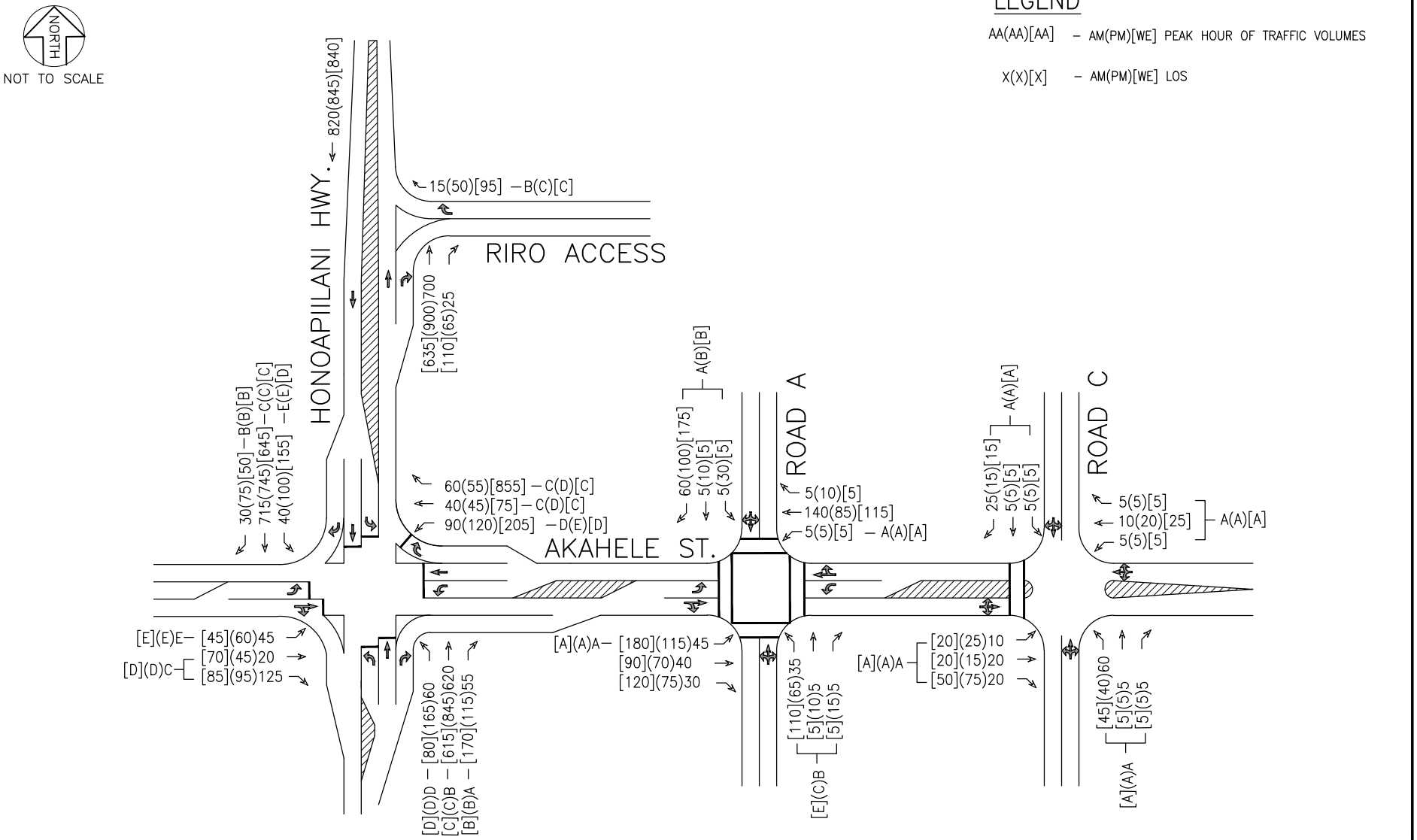

PULELEHUA

AUSTIN, TSUTSUMI & ASSOCIATES, INC.
ENGINEERS, SURVEYORS • HONOLULU, HAWAII

FIGURE 5.5

FUTURE YEAR 2022 SCENARIO 2
AKAHELE STREET LANE CONFIGURATION, VOLUMES AND LOS

Table 5.5: Future Year 2027 (Full Pulelehua build-out with School)
Left-Turn Storage Lane Length Calculations

Honoapiilani Highway & Akahele Street Intersection										
			AASHTO					SIMULATION		Recommended storage length [4]
Movement	Peak Hour	Design Volume per lane (veh)	Cycle Length (sec)	Cycles per Hour	Average Veh. per Cycle	Minimum Storage Length (1.5 factor)		Average Queue	95th Percentile Queue	
						Veh	Ft	Ft	Ft	
Northbound Left-turn lane	PM	170	150	24	8	11	**275**	141	225	275 ft
	WE	85	135	27	4	5	125	100	**261**	
Southbound Left-turn lane	PM	135	150	24	6	9	225	142	279	275 ft
	WE	165	135	27	7	10	**250**	163	**277**	
Eastbound Left-turn lane [3]	PM	60	150	24	3	4	**100**	57	**120**	Storage accommodated
	WE	45	135	27	2	3	75	40	99	
Westbound Left-turn lane	PM	145	150	24	7	10	250	166	293	300 ft
	WE	215	135	27	8	12	**300**	183	**305**	

Notes:

1. AM peak hour omitted, since PM and WE left-turns were highest volumes.
2. Minimum storage length is 1.5 times the average number of vehicles per cycle; assume 1 vehicle length = 25 ft.
3. Eastbound left-turn storage currently accommodated.
4. Recommended storage length is exclusive of taper length or deceleration length. To be verified upon design.

Table 5.6: Base Year 2022 with Mitigation, Future Year 2022 Scenario 1 and Future Year 2022 Scenario 2 Level of Service Summary

	Base Year 2022 with Mitigation									Future Year 2022 Scenario 1									Future Year 2022 Scenario 2								
	AM			PM			WE			AM			PM			WE			AM			PM			WE		
Intersection	HCM Delay	v/c Ratio	LOS	HCM Delay	v/c Ratio	LOS	HCM Delay	v/c Ratio	LOS	HCM Delay	v/c Ratio	LOS	HCM Delay	v/c Ratio	LOS	HCM Delay	v/c Ratio	LOS	HCM Delay	v/c Ratio	LOS	HCM Delay	v/c Ratio	LOS	HCM Delay	v/c Ratio	LOS
1: Honoapiilani Highway & Napilihau Street																											
NB LT	18.9	0.75	B	19.7	0.82	B	19.5	0.77	B	18.8	0.75	B	19.9	0.83	B	19.6	0.78	B	18.9	0.75	B	20.6	0.84	C	20.6	0.80	C
NB TH	8.1	0.32	A	6.0	0.23	A	7.6	0.37	A	8.1	0.32	A	5.9	0.23	A	7.5	0.37	A	8.3	0.34	A	5.7	0.24	A	7.2	0.39	A
NB RT	6.9	0.08	A	5.2	0.05	A	5.9	0.03	A	6.9	0.08	A	5.2	0.05	A	5.8	0.03	A	7.0	0.08	A	4.9	0.05	A	5.4	0.03	A
EB LT/TH	15.0	0.26	B	20.4	0.29	C	17.8	0.28	B	15.1	0.26	B	20.8	0.29	C	18.1	0.28	B	15.3	0.25	B	22.2	0.31	C	20.2	0.31	C
EB RT	14.5	0.16	B	19.5	0.13	B	17.2	0.18	B	14.6	0.16	B	19.8	0.13	B	17.5	0.17	B	14.8	0.16	B	21.1	0.16	C	19.4	0.18	B
WB LT	17.4	0.30	B	22.8	0.28	C	19.5	0.18	B	17.5	0.30	B	23.2	0.28	C	19.9	0.19	B	17.8	0.31	B	24.8	0.30	C	22.3	0.21	C
WB TH/RT	14.7	0.22	B	19.4	0.13	B	17.7	0.27	B	14.8	0.22	B	19.7	0.13	B	18.0	0.27	B	15.0	0.21	B	20.9	0.14	C	19.9	0.29	B
SB LT	66.8	0.72	E	73.0	0.73	E	55.6	0.77	E	67.0	0.72	E	73.4	0.73	E	56.1	0.77	E	67.6	0.72	E	75.2	0.73	E	59.3	0.78	E
SB TH	12.9	0.31	B	17.9	0.60	B	15.2	0.57	B	13.0	0.32	B	18.0	0.61	B	15.3	0.57	B	13.6	0.33	B	18.8	0.63	B	16.4	0.60	B
SB RT	11.2	0.02	B	13.1	0.05	B	11.4	0.06	B	11.3	0.02	B	13.2	0.05	B	11.4	0.06	B	11.8	0.02	B	13.6	0.05	B	11.9	0.06	B
Overall	14.2	-	B	16.7	-	B	15.1	-	B	14.3	-	B	16.8	-	B	15.2	-	B	14.4	-	B	17.5	-	B	16.0	-	B
2: Honoapiilani Highway & Hoohui Road																											
NB LT	9.8	0.36	A	9.2	0.47	A	8.4	0.33	A	9.8	0.37	A	9.6	0.49	A	8.4	0.33	A	10.3	0.40	B	10.8	0.55	B	8.9	0.41	A
NB TH	10.8	0.64	B	9.3	0.66	A	8.9	0.57	A	11.0	0.66	B	9.3	0.66	A	9.0	0.58	A	11.3	0.68	B	9.5	0.68	A	9.0	0.62	A
NB RT	0.0	0.00	A	0.0	0.00	A	0.0	0.00	A	0.0	0.00	A	0.0	0.00	A	0.0	0.00	A	0.0	0.00	A	0.0	0.00	A	0.0	0.00	A
EB LT/TH	17.3	0.17	B	19.9	0.31	B	16.3	0.22	B	17.3	0.17	B	20.4	0.32	C	16.5	0.22	B	17.9	0.17	B	21.7	0.32	C	18.5	0.24	B
EB RT	16.3	0.06	B	18.4	0.07	B	15.6	0.10	B	16.3	0.06	B	18.9	0.07	B	15.9	0.10	B	16.9	0.07	B	20.1	0.07	C	17.7	0.10	B
WB LT	19.9	0.28	B	22.0	0.20	C	17.7	0.14	B	20.0	0.28	B	22.6	0.21	C	17.9	0.14	B	20.8	0.30	C	24.2	0.23	C	20.2	0.17	C
WB TH/RT	16.3	0.07	B	18.3	0.07	B	15.5	0.06	B	16.3	0.07	B	18.9	0.07	B	15.7	0.06	B	16.9	0.06	B	20.1	0.07	C	17.5	0.07	B
SB LT	9.7	0.03	A	8.1	0.07	A	8.0	0.04	A	9.8	0.03	A	8.1	0.07	A	8.0	0.04	A	10.0	0.03	B	8.3	0.07	A	8.0	0.04	A
SB TH	15.1	0.77	B	13.2	0.77	B	12.5	0.73	B	15.2	0.77	B	13.4	0.78	B	12.5	0.74	B	15.6	0.78	B	14.1	0.80	B	13.1	0.77	B
SB RT	9.5	0.05	A	8.0	0.06	A	8.1	0.04	A	9.5	0.05	A	8.0	0.06	A	8.0	0.04	A	9.6	0.05	A	8.0	0.07	A	7.8	0.04	A
Overall	13.3	-	B	11.8	-	B	11.1	-	B	13.4	-	B	12.0	-	B	11.2	-	B	13.8	-	B	12.6	-	B	11.6	-	B
3: Honoapiilani Highway & Akahele Street																											
NB LT	42.7	0.77	D	42.6	0.81	D	37.1	0.76	D	44.7	0.77	D	44.8	0.81	D	39.3	0.76	D	48.9	0.77	D	54.1	0.84	D	53.0	0.77	D
NB TH	10.6	0.65	B	13.0	0.76	B	10.0	0.60	A	12.1	0.66	B	15.4	0.78	B	11.7	0.62	B	16.0	0.72	B	34.5	0.93	C	28.9	0.87	C
NB RT	6.5	0.01	A	5.9	0.01	A	6.4	0.01	A	7.4	0.02	A	7.0	0.04	A	7.6	0.03	A	9.7	0.04	A	12.3	0.09	B	17.6	0.18	B
EB LT	44.0	0.72	D	52.9	0.77	D	42.6	0.71	D	47.7	0.73	D	54.8	0.77	D	46.2	0.73	D	55.2	0.78	E	63.3	0.77	E	62.4	0.78	E
EB TH/RT	24.0	0.08	C	32.8	0.04	C	23.8	0.06	C	25.6	0.06	C	34.6	0.09	C	25.1	0.09	C	29.1	0.12	C	46.8	0.52	D	44.7	0.71	D
WB LT	69.5	0.53	E	65.8	0.58	E	51.3	0.55	D	47.7	0.73	D	63.7	0.74	E	45.7	0.70	D	43.5	0.76	D	56.4	0.81	E	50.5	0.85	D
WB TH	25.3	0.03	C	35.5	0.03	D	24.8	0.03	C	25.7	0.07	C	36.3	0.09	D	25.2	0.07	C	26.8	0.14	C	39.3	0.17	D	29.6	0.20	C
WB RT	25.2	0.01	C	35.4	0.01	D	24.7	0.01	C	25.4	0.01	C	35.8	0.01	D	24.9	0.01	C	26.2	0.02	C	38.2	0.03	D	28.4	0.05	C
SB LT	112.0	0.71	F	126.5	0.72	F	110.8	0.70	F	78.6	0.78	E	80.5	0.82	F	73.9	0.85	E	58.6	0.79	E	57.5	0.79	E	47.7	0.81	D
SB TH	15.3	0.84	B	22.9	0.88	C	15.5	0.83	B	16.8	0.85	B	25.0	0.89	C	17.1	0.84	B	20.1	0.87	C	31.8	0.89	C	24.0	0.81	C
SB RT	7.8	0.02	A	10.6	0.05	B	8.3	0.03	A	8.6	0.02	A	11.2	0.05	B	9.2	0.03	A	10.3	0.02	B	14.1	0.05	B	13.6	0.03	B
Overall	15.7	-	B	21.5	-	C	15.8	-	B	18.2	-	B	24.5	-	C	18.6	-	B	22.8	-	C	37.5	-	D	32.8	-	C
4: Honoapiilani Highway & Lower Honoapiilani Road																											
NB LT	22.4	0.83	C	30.0	0.94	C	21.2	0.87	C	22.7	0.83	C	30.0	0.94	C	21.6	0.87	C	23.9	0.84	C	34.3	0.94	C	26.1	0.89	C
NB TH/RT	4.7	0.33	A	4.4	0.36	A	2.4	0.24	A	4.7	0.34	A	4.5	0.37	A	2.5	0.25	A	4.6	0.35	A	4.5	0.40	A	2.8	0.31	A
EB LT/TH	25.0	0.19	C	41.7	0.38	D	26.8	0.28	C	25.3	0.20	C	42.1	0.41	D	27.3	0.31	C	26.6	0.20	C	46.1	0.45	D	32.2	0.38	C
EB RT	0.0	0.00	A	0.0	0.00	A	0.0	0.00	A	0.0	0.00	A	0.0	0.00	A	0.0	0.00	A	0.0	0.00	A	0.0	0.00	A	0.0	0.00	A
WB LT/TH/RT	24.4	0.10	C	42.5	0.47	D	25.3	0.05	C	24.8	0.11	C	42.6	0.47	D	25.6	0.05	C	26.1	0.11	C	46.3	0.48	D	29.7	0.05	C
SB LT	50.7	0.74	D	87.3	0.72	F	0.0	0.00	A	51.1	0.74	D	87.4	0.72	F	0.0	0.00	A	52.8	0.74	D	91.8	0.73	F	0.0	0.00	A
SB TH	13.0	0.58	B	27.4	0.70	C	14.7	0.58	B	13.1	0.59	B	27.7	0.71	C	15.0	0.59	B	13.3	0.61	B	29.3	0.74	C	16.8	0.64	B
SB RT	9.2	0.00	A	19.5	0.01	B	11.0	0.03	B	9.2	0.01	A	19.5	0.01	B	11.1	0.03	B	9.2	0.01	A	20.0	0.01	C	11.8	0.05	B
Overall	12.0	-	B	20.9	-	C	12.6	-	B	12.1	-	B	20.9	-	C	12.7	-	B	12.3	-	B	22.4	-	C	14.0	-	B
5: Honoapiilani Highway & Kai Malina Parkway/Halawai Drive																											
NB LT	31.8	0.79	C	43.8	0.82	D	35.3	0.78	D	32.8	0.79	C	44.5	0.82	D	36.0	0.78	D	34.2	0.79	C	46.6	0.82	D	40.0	0.79	D
NB TH/RT	4.1	0.45	A	7.1	0.60	A	4.9	0.41	A	4.0	0.45	A	7.2	0.61	A	5.0	0.42	A	4.1	0.47	A	7.7	0.64	A	5.2	0.48	A
EB LT/TH	30.4	0.16	C	37.0	0.22	D	30.2	0.25	C	31.4	0.17	C	37.6	0.23	D	30.9	0.27	C	32.8	0.19	C	39.4	0.25	D	34.7	0.31	C
EB RT	30.3	0.01	C	36.2	0.03	D	29.5	0.04	C	31.2	0.01	C	36.7	0.03	D	30.1	0.05	C	32.5	0.01	C	38.4	0.03	D	33.5	0.04	C
WB LT/TH/RT	30.9	0.11	C	38.1	0.08	D	29.5	0.10	C	31.8	0.11	C	38.7	0.08	D	30.1	0.11	C	32.9	0.11	C	40.7	0.09	D	33.9	0.12	C
SB LT	53.5	0.78	D	73.1	0.78	E	59.7	0.75	E	54.8	0.78	D	73.9	0.78	E	60.6	0.75	E	56.9	0.79	E	76.8	0.78	E	66.1	0.76	E
SB TH	7.7	0.61	A	12.5	0.72	B	8.8	0.63	A	7.8	0.62	A	12.7	0.73	B	8.9	0.64	A	8.0	0.63	A	13.6	0.75	B	9.5	0.68	A
SB RT	4.5	0.04	A	6.4	0.04	A	5.1	0.04	A	4.5	0.05	A	6.4	0.04	A	5.1	0.04	A	4.5	0.05	A	6.5	0.04	A	5.1	0.05	A
Overall	8.1	-	A	12.1	-	B	9.3	-	A	8.1	-	A	12.2	-	B	9.4	-	A	8.3	-	A	12.9	-	B	9.9	-	A

Table 5.6: Base Year 2022 with Mitigation, Future Year 2022 Scenario 1 and Future Year 2022 Scenario 2 Level of Service Summary Cont'd

	Base Year 2022 with Mitigation									Future Year 2022 Scenario 1									Future Year 2022 Scenario 2								
	AM			PM			WE			AM			PM			WE			AM			PM			WE		
Intersection	HCM Delay	v/c Ratio	LOS	HCM Delay	v/c Ratio	LOS	HCM Delay	v/c Ratio	LOS	HCM Delay	v/c Ratio	LOS	HCM Delay	v/c Ratio	LOS	HCM Delay	v/c Ratio	LOS	HCM Delay	v/c Ratio	LOS	HCM Delay	v/c Ratio	LOS	HCM Delay	v/c Ratio	LOS
6: Honoapiilani Highway & Kai Ala Drive/Puukolii Road																											
NB LT	74.0	0.85	E	78.1	0.86	E	39.8	0.78	D	74.2	0.85	E	78.0	0.86	E	40.2	0.78	D	74.1	0.85	E	77.8	0.86	E	42.3	0.79	D
NB TH	6.2	0.48	A	9.8	0.58	A	8.2	0.49	A	6.4	0.48	A	10.0	0.60	B	8.3	0.50	A	6.5	0.50	A	10.8	0.63	B	8.8	0.56	A
NB RT	3.8	0.04	A	5.4	0.04	A	5.5	0.03	A	3.8	0.04	A	5.3	0.04	A	5.5	0.03	A	3.8	0.04	A	5.5	0.04	A	5.4	0.03	A
EB LT/TH	68.7	0.38	E	67.2	0.37	E	31.3	0.23	C	68.7	0.38	E	67.2	0.37	E	31.8	0.25	C	68.7	0.38	E	67.1	0.39	E	34.3	0.28	C
EB RT	63.3	0.01	E	63.7	0.13	E	30.1	0.05	C	63.3	0.01	E	63.7	0.13	E	30.3	0.05	C	63.3	0.01	E	63.7	0.18	E	32.5	0.05	C
WB LT	75.0	0.39	E	78.4	0.54	E	34.6	0.21	C	75.0	0.39	E	78.4	0.54	E	35.3	0.22	D	75.0	0.39	E	78.7	0.54	E	38.2	0.24	D
WB TH/RT	64.1	0.10	E	62.5	0.03	E	29.9	0.03	C	64.1	0.10	E	62.5	0.03	E	30.2	0.03	C	64.1	0.10	E	62.1	0.03	E	32.3	0.03	C
SB LT	82.9	0.69	F	89.0	0.78	F	42.4	0.58	D	84.8	0.76	F	89.0	0.78	F	42.8	0.58	D	84.8	0.76	F	89.0	0.78	F	45.3	0.62	D
SB TH	10.0	0.52	B	18.1	0.73	B	13.6	0.73	B	10.2	0.53	B	18.3	0.74	B	13.7	0.73	B	10.5	0.55	B	19.7	0.77	B	14.8	0.77	B
SB RT	6.0	0.03	A	8.5	0.07	A	7.4	0.05	A	6.0	0.03	A	8.6	0.08	A	7.4	0.05	A	6.0	0.03	A	8.8	0.08	A	7.2	0.05	A
Overall	13.9	-	B	19.9	-	B	13.6	-	B	14.1	-	B	20.0	-	B	13.8	-	B	14.2	-	B	20.9	-	C	14.5	-	B
7: Honoapiilani Highway & Kaanapali Parkway/Halelo Street																											
NB LT	40.7	0.75	D	91.4	0.85	F	49.6	0.71	D	41.7	0.75	D	92.7	0.85	F	50.6	0.71	D	43.5	0.76	D	96.6	0.86	F	57.8	0.74	E
NB TH/RT	16.2	0.68	B	22.0	0.66	C	13.7	0.56	B	16.0	0.68	B	22.4	0.67	C	13.8	0.57	B	16.4	0.69	B	24.0	0.70	C	15.1	0.61	B
EB LT/TH	44.2	0.46	D	86.1	0.60	F	48.6	0.58	D	45.4	0.46	D	87.8	0.61	F	49.6	0.59	D	47.3	0.48	D	92.8	0.65	F	56.3	0.65	E
EB RT	28.3	0.08	C	63.9	0.51	E	36.4	0.34	D	29.1	0.07	C	64.9	0.51	E	37.0	0.34	D	30.4	0.08	C	68.0	0.52	E	42.0	0.35	D
WB LT/TH/RT	44.7	0.18	D	100.0	0.23	F	54.7	0.32	D	45.9	0.18	D	101.4	0.23	F	55.7	0.32	E	47.8	0.18	D	105.7	0.24	F	63.6	0.35	E
SB LT	46.2	0.57	D	112.3	0.72	F	53.9	0.50	D	47.4	0.57	D	114.5	0.72	F	55.0	0.51	D	49.3	0.60	D	123.6	0.74	F	62.7	0.56	E
SB TH	22.1	0.75	C	41.1	0.88	D	20.8	0.76	C	22.2	0.75	C	41.8	0.88	D	21.0	0.76	C	22.6	0.76	C	44.3	0.90	D	22.7	0.78	C
SB RT	9.8	0.08	A	8.2	0.11	A	6.9	0.13	A	9.8	0.09	A	8.2	0.11	A	6.8	0.12	A	9.7	0.09	A	8.2	0.11	A	6.6	0.13	A
Overall	23.7	-	C	44.8	-	D	24.1	-	C	23.8	-	C	45.4	-	D	24.4	-	C	24.5	-	C	47.8	-	D	26.7	-	C
8: Honoapiilani Highway & Leialii Parkway																											
NB LT	75.8	0.45	E	69.1	0.50	E	72.4	0.44	E	75.8	0.45	E	74.2	0.50	E	72.4	0.44	E	75.6	0.45	E	73.9	0.50	E	71.9	0.44	E
NB TH/RT	8.8	0.70	A	2.4	0.75	A	2.9	0.60	A	8.8	0.70	A	2.4	0.75	A	3.0	0.61	A	9.0	0.71	A	2.6	0.78	A	3.4	0.66	A
EB LT/TH/RT	58.6	0.06	E	57.0	0.07	E	50.0	0.03	D	58.6	0.06	E	61.4	0.07	E	50.0	0.03	D	58.6	0.06	E	61.4	0.07	E	50.0	0.03	D
WB LT	62.0	0.37	E	62.5	0.54	E	58.1	0.63	E	62.0	0.37	E	67.4	0.56	E	58.1	0.63	E	62.0	0.37	E	67.4	0.56	E	58.1	0.63	E
WB TH/RT	58.6	0.01	E	56.7	0.05	E	50.3	0.05	D	58.6	0.01	E	60.9	0.05	E	50.3	0.05	D	58.6	0.01	E	60.9	0.05	E	50.3	0.05	D
SB LT	68.8	0.52	E	66.2	0.78	E	76.2	0.79	E	68.8	0.52	E	71.5	0.79	E	76.2	0.79	E	68.8	0.52	E	74.5	0.80	E	78.6	0.80	E
SB TH/RT	5.2	0.51	A	13.3	0.83	B	10.2	0.70	B	5.3	0.52	A	13.2	0.83	B	10.3	0.71	B	5.5	0.53	A	14.1	0.85	B	11.3	0.74	B
Overall	9.1	-	A	10.8	-	B	11.0	-	B	9.1	-	A	11.0	-	B	11.1	-	B	9.3	-	A	11.6	-	B	11.6	-	B
9: Honoapiilani Highway & Front Street/Flemming Road																											
NB LT	89.8	0.73	F	96.3	0.74	F	87.9	0.84	F	89.7	0.73	F	102.8	0.75	F	87.3	0.84	F	88.9	0.73	F	100.6	0.75	F	85.9	0.84	F
NB TH/RT	7.6	0.67	A	1.9	0.71	A	16.3	0.50	B	7.7	0.67	A	2.2	0.71	A	6.7	0.51	A	7.8	0.68	A	2.4	0.74	A	7.6	0.55	A
EB LT/TH/RT	52.6	0.48	D	59.5	0.72	E	57.7	0.66	E	52.6	0.48	D	65.1	0.74	E	57.7	0.66	E	52.6	0.48	D	65.2	0.75	E	57.5	0.68	E
WB LT/TH/RT	54.3	0.61	D	49.7	0.24	D	52.3	0.32	D	54.3	0.61	D	53.0	0.24	D	52.3	0.32	D	54.3	0.61	D	52.5	0.23	D	51.3	0.30	D
SB LT	88.2	0.81	F	87.4	0.74	F	88.0	0.82	F	88.0	0.81	F	93.6	0.75	F	87.7	0.82	F	87.7	0.81	F	92.2	0.75	F	86.3	0.82	F
SB TH	4.9	0.48	A	11.8	0.79	B	7.7	0.64	A	5.0	0.49	A	12.5	0.79	B	7.8	0.64	A	5.1	0.50	A	13.2	0.81	B	8.7	0.68	A
SB RT	3.2	0.11	A	5.6	0.24	A	4.3	0.17	A	3.2	0.12	A	5.9	0.23	A	4.3	0.18	A	3.2	0.12	A	6.1	0.24	A	4.7	0.19	A
Overall	9.9	-	A	10.4	-	B	14.8	-	B	9.9	-	A	11.1	-	B	11.1	-	B	10.0	-	A	11.5	-	B	11.8	-	B
10: Honoapiilani Highway & Kapunakea Street																											
NB LT	74.7	0.79	E	67.6	0.79	E	71.9	0.79	E	74.6	0.79	E	87.9	0.82	F	71.7	0.79	E	74.0	0.79	E	83.9	0.82	F	70.4	0.79	E
NB TH/RT	1.3	0.66	A	1.3	0.71	A	2.8	0.58	A	1.3	0.66	A	1.3	0.71	A	2.9	0.59	A	1.3	0.68	A	1.2	0.74	A	3.6	0.64	A
EB LT/TH	64.2	0.72	E	62.3	0.75	E	59.7	0.74	E	64.2	0.72	E	68.9	0.77	E	57.5	0.73	E	64.5	0.72	E	69.3	0.77	E	58.0	0.75	E
EB RT	48.3	0.01	D	43.6	0.03	D	42.6	0.04	D	48.3	0.01	D	47.1	0.03	D	42.3	0.04	D	47.9	0.01	D	46.8	0.03	D	41.2	0.04	D
WB LT	55.1	0.51	E	46.9	0.29	D	45.3	0.26	D	55.1	0.51	E	50.6	0.30	D	44.9	0.26	D	54.6	0.50	D	50.2	0.29	D	43.7	0.25	D
WB TH/RT	49.3	0.10	D	44.1	0.08	D	42.9	0.07	D	49.3	0.10	D	47.7	0.08	D	42.7	0.07	D	48.9	0.10	D	47.3	0.08	D	41.6	0.07	D
SB LT	101.8	0.83	F	72.4	0.80	E	85.2	0.84	F	101.7	0.83	F	77.1	0.79	E	85.5	0.84	F	101.4	0.83	F	74.3	0.79	E	84.3	0.84	F
SB TH/RT	10.3	0.56	B	5.5	0.89	A	3.6	0.78	A	10.5	0.56	B	5.1	0.88	A	7.8	0.78	A	10.9	0.58	B	5.9	0.90	A	9.9	0.83	A
Overall	11.9	-	B	9.7	-	A	9.7	-	A	11.9	-	B	10.2	-	B	11.7	-	B	12.0	-	B	10.5	-	B	12.9	-	B

Table 5.6: Base Year 2022 with Mitigation, Future Year 2022 Scenario 1 and Future Year 2022 Scenario 2 Level of Service Summary Cont'd

	Base Year 2022 with Mitigation									Future Year 2022 Scenario 1									Future Year 2022 Scenario 2								
	AM			PM			WE			AM			PM			WE			AM			PM			WE		
Intersection	HCM Delay	v/c Ratio	LOS	HCM Delay	v/c Ratio	LOS	HCM Delay	v/c Ratio	LOS	HCM Delay	v/c Ratio	LOS	HCM Delay	v/c Ratio	LOS	HCM Delay	v/c Ratio	LOS	HCM Delay	v/c Ratio	LOS	HCM Delay	v/c Ratio	LOS	HCM Delay	v/c Ratio	LOS
11: Honoapiilani Highway & Keawe Street																											
NB LT	79.8	0.79	E	69.3	0.78	E	64.0	0.79	E	79.8	0.79	E	79.7	0.78	E	64.0	0.79	E	79.8	0.79	E	79.7	0.78	E	64.0	0.79	E
NB TH	32.3	0.62	C	39.4	0.75	D	31.0	0.55	C	32.5	0.62	C	40.5	0.74	D	31.0	0.55	C	34.9	0.66	C	45.2	0.80	D	33.5	0.61	C
NB RT	23.6	0.08	C	28.6	0.21	C	25.9	0.20	C	23.7	0.08	C	29.7	0.22	C	25.9	0.20	C	25.1	0.08	C	31.8	0.23	C	27.2	0.21	C
EB LT/TH	47.7	0.35	D	63.6	0.79	E	61.5	0.77	E	47.7	0.35	D	59.0	0.75	E	61.6	0.77	E	46.2	0.33	D	57.2	0.73	E	62.7	0.78	E
EB RT	43.9	0.02	D	42.9	0.03	D	44.5	0.04	D	43.9	0.02	D	44.4	0.04	D	44.4	0.04	D	42.5	0.01	D	42.5	0.03	D	43.6	0.04	D
WB LT	38.3	0.29	D	40.7	0.58	D	42.2	0.62	D	38.4	0.29	D	46.9	0.62	D	42.2	0.62	D	37.1	0.28	D	43.8	0.59	D	41.9	0.63	D
WB TH	35.5	0.14	D	33.9	0.20	C	34.6	0.25	C	35.6	0.14	D	37.0	0.21	D	34.6	0.25	C	34.4	0.14	C	35.2	0.20	D	33.9	0.25	C
WB RT	65.7	0.92	E	64.4	0.92	E	43.2	0.68	D	65.7	0.92	E	67.7	0.92	E	43.7	0.70	D	66.5	0.93	E	69.0	0.93	E	47.6	0.78	D
SB LT	51.4	0.91	D	46.4	0.95	D	62.2	0.88	E	51.3	0.91	D	48.3	0.94	D	58.0	0.89	E	51.2	0.92	D	47.4	0.95	D	57.5	0.89	E
SB TH/RT	1.0	0.45	A	1.3	0.70	A	41.1	0.58	D	1.0	0.45	A	1.3	0.69	A	30.7	0.59	C	1.1	0.47	A	1.4	0.73	A	31.9	0.62	C
Overall	32.1	-	C	32.2	-	C	43.9	-	D	32.0	-	C	33.2	-	C	39.9	-	D	32.8	-	C	34.3	-	C	41.2	-	D
12: RIRO Access & Honoapiilani Highway																											
WB RT																			14.3	0.04	B	19.4	0.18	C	15.5	0.23	C
Overall																			0.1	-	-	0.5	-	-	0.9	-	-
14: Road A & Akahele Street																											
NB LT/TH/RT										9.4	0.03	A	9.8	0.03	A	9.7	0.03	A	11.4	0.08	B	15.6	0.22	C	35.5	0.54	E
EB LT										7.4	0.00	A	7.4	0.02	A	7.4	0.01	A	7.5	0.03	A	7.6	0.08	A	7.8	0.13	A
WB LT										7.3	0.00	A	7.4	0.00	A	7.4	0.00	A	7.4	0.00	A	7.5	0.00	A	7.7	0.00	A
SB LT/TH/RT										9.0	0.04	A	9.3	0.03	A	9.2	0.03	A	9.5	0.09	A	11.1	0.21	B	10.4	0.23	B
Overall										3.4	-	-	3.2	-	-	3.0	-	-	4.6	-	-	6.9	-	-	9.7	-	-
15: Road C & Akahele Street																											
NB LT/TH/RT										9.0	0.01	A	9.4	0.04	A	9.4	0.04	A	9.0	0.01	A	9.9	0.07	A	9.8	0.07	A
EB LT/TH/RT										7.3	0.00	A	7.3	0.01	A	7.3	0.01	A	7.3	0.01	A	7.3	0.02	A	7.3	0.01	A
WB LT/TH/RT										7.3	0.00	A	7.3	0.00	A	7.3	0.00	A	7.3	0.00	A	7.4	0.00	A	7.4	0.00	A
SB LT/TH/RT										8.8	0.03	A	9.0	0.02	A	9.0	0.02	A	8.8	0.04	A	9.1	0.03	A	9.1	0.03	A
Overall										4.2	-	-	4.2	-	-	4.2	-	-	4.4	-	-	4.3	-	-	4.6	-	-

5.4 Future Year 2022 Scenario 3 Analysis

By completion of Scenario 3 in Future Year 2022, the Project is projected to generate an additional 168(255)[257] new external trips during the AM(PM)[WE] peak hours of traffic. Trips generated by the Project are expected to result in growth along major roadways in the study area. Traffic generated by Project Scenario 3 will access the site via a new Road J which is proposed to connect to Honoapiilani Highway and service the areas south of Mahinahina Gulch.

By Future Year 2022 WITH the cumulative increases of Project Scenarios 1, 2 and 3, regional traffic at the study intersections (those not providing direct access to the Project) along Honoapiilani Highway is estimated to increase overall by approximately 5-20%, while local traffic at the study intersections (those providing direct access to the Project) along Honoapiilani Highway is estimated to increase overall by approximately 10-50% from Base Year 2022 without the Project scenario, during the AM, PM and WE peak hours of traffic.

5.4.1 Future Year 2022 Scenario 3 Intersection Analysis

With the additional trips generated by Scenario 3, all study intersections are forecast to operate similar to Future Year 2022 with Scenario 2, with no major changes to LOS or capacity with the exception of the Honoapiilani Highway/Akahele Street intersection described further below. All intersection movements forecast to operate at LOS E/F for Future Year 2022 Scenario 2 conditions will continue to operate at LOS E/F conditions during Future Year 2022 Scenario 3. The majority of high volume through movements only experienced delay increases ranging from 1-5 seconds.

<u>[3] Honoapiilani Highway/Akahele Street</u>

Due to the continued development of areas north of Mahinahina Gulch, turning movements into and out of Akahele Street will increase. As a result, the intersection will worsen, but operate adequately from an overall LOS C(D)[C] during the Future Year 2022 Scenario 2 condition to an overall LOS C(D)[D] for the Future Year 2022 Scenario 3. The majority of left-turn movements will operate at LOS E conditions during all peak hours, due to the long cycle length and increased turning movements at the intersection. However, all movements will continue to operate under capacity. All left-turn storage lane lengths recommended in Table 5.5 accounts for traffic generated for the Future Year 2022 Scenario 3.

<u>[13] Honoapiilani Highway/Road J</u>

The proposed Honoapiilani Highway/Road J intersection was analyzed as an unsignalized intersection, which includes exclusive westbound left-turn and right-turn lanes, an exclusive southbound left-turn lane and an exclusive northbound right-turn lane. A southbound median refuge lane along Honoapiilani Highway is also recommended to facilitate westbound vehicles making the left-turn movement from Road J onto Honoapiilani Highway. Based on the <u>Manual on Uniform Traffic Control Devices (MUTCD)</u>, Federal Highway Administration, dated 2009, Four-Hour Vehicular Volume traffic signal warrant, a traffic signal is not forecast to be warranted. Signal warrant figures are shown in Appendix D. Based on the AASHTO Green Book, the following is recommended:

- Northbound Approach → Provide one (1) through lane and a new right-turn deceleration lane with at least 100 feet of storage space. Additional taper length and/or deceleration length to be provided based upon design. AASHTO Green Book recommends 425 feet to accommodate full deceleration length with a design speed of 50 mph.

- Southbound Approach → Provide one (1) through lane and a new left-turn storage lane with at least 100 feet of storage space. Additional taper length and/or deceleration length to be provided based upon design. AASHTO Green Book recommends 425 feet to accommodate full deceleration length with a design speed of 50 mph.
    - Construct a median refuge lane to facilitate westbound left-turn traffic exiting Road J going onto Honoapiilani Highway.
- Westbound Approach → Provide a new left-turn storage lane and a new 100 feet right-turn storage lane.

Based on the above configuration, the westbound left-turn out of the Project is expected to operate at LOS F during the PM peak hour of traffic and LOS E during the WE peak hour of traffic. However, gaps in through traffic along Honoapiilani Highway will help facilitate westbound left-turn movements due to traffic being controlled by the upstream signal at Akahele Street to the north and downstream signal at Lower Honoapiilani Road to the south. Also, a median refuge lane is proposed to provide two-stage movement for left-turn vehicles to cross one direction at a time.

Figure 5.6 illustrates the Project-generated trips for Future Year 2022 Scenario 3. Figure 5.7 illustrates the Future Year 2022 Scenario 3 forecast traffic volumes and LOS for the study intersection movements. Table 5.7 summarizes the Future Year 2022 Scenario 3 LOS at the study intersections compared to Base Year 2022 with mitigation and Future Year 2022 Scenario 2. LOS worksheets are provided in Appendix C.

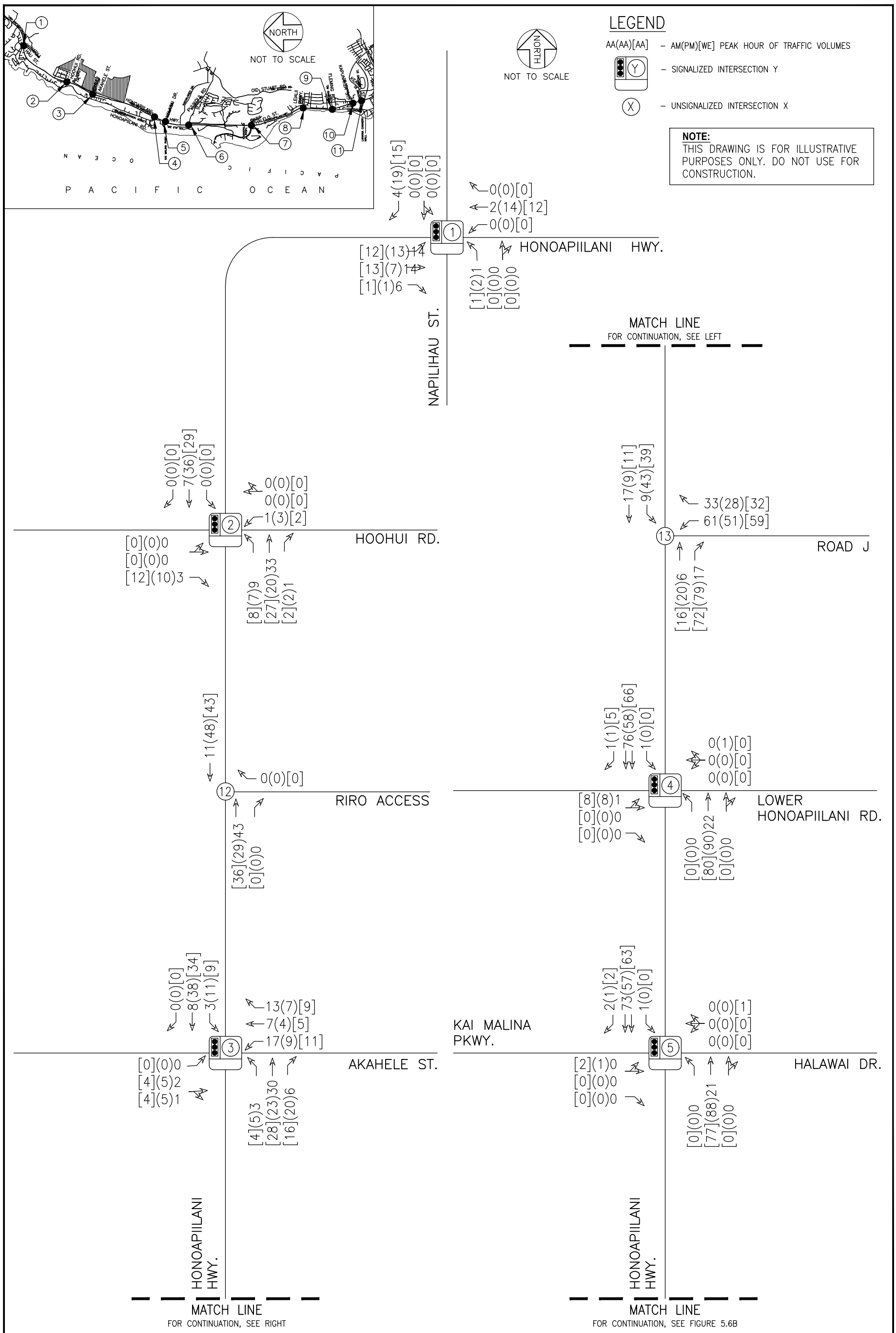

PULELEHUA

AUSTIN, TSUTSUMI & ASSOCIATES, INC.
ENGINEERS, SURVEYORS • HONOLULU, HAWAII

YEAR 2022 SCENARIO 3 PROJECT-GENERATED TRAFFIC

FIGURE 5.6A

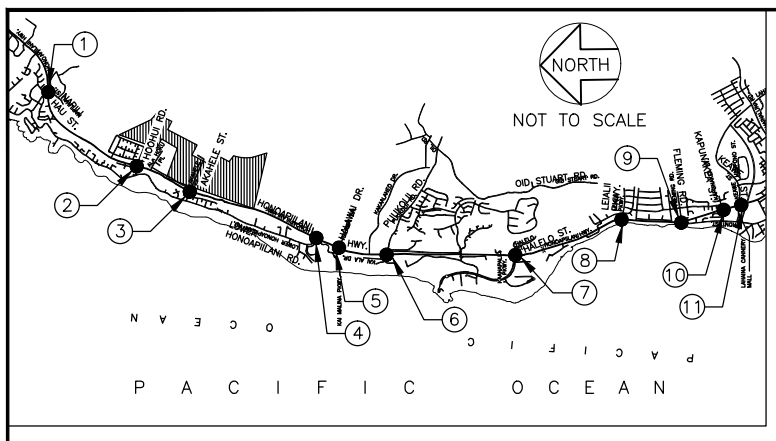

LEGEND

NORTH
NOT TO SCALE

AA(AA)[AA] – AM(PM)[WE] PEAK HOUR OF TRAFFIC VOLUMES

Y – SIGNALIZED INTERSECTION Y

X – UNSIGNALIZED INTERSECTION X

NOTE:
THIS DRAWING IS FOR ILLUSTRATIVE PURPOSES ONLY. DO NOT USE FOR CONSTRUCTION.

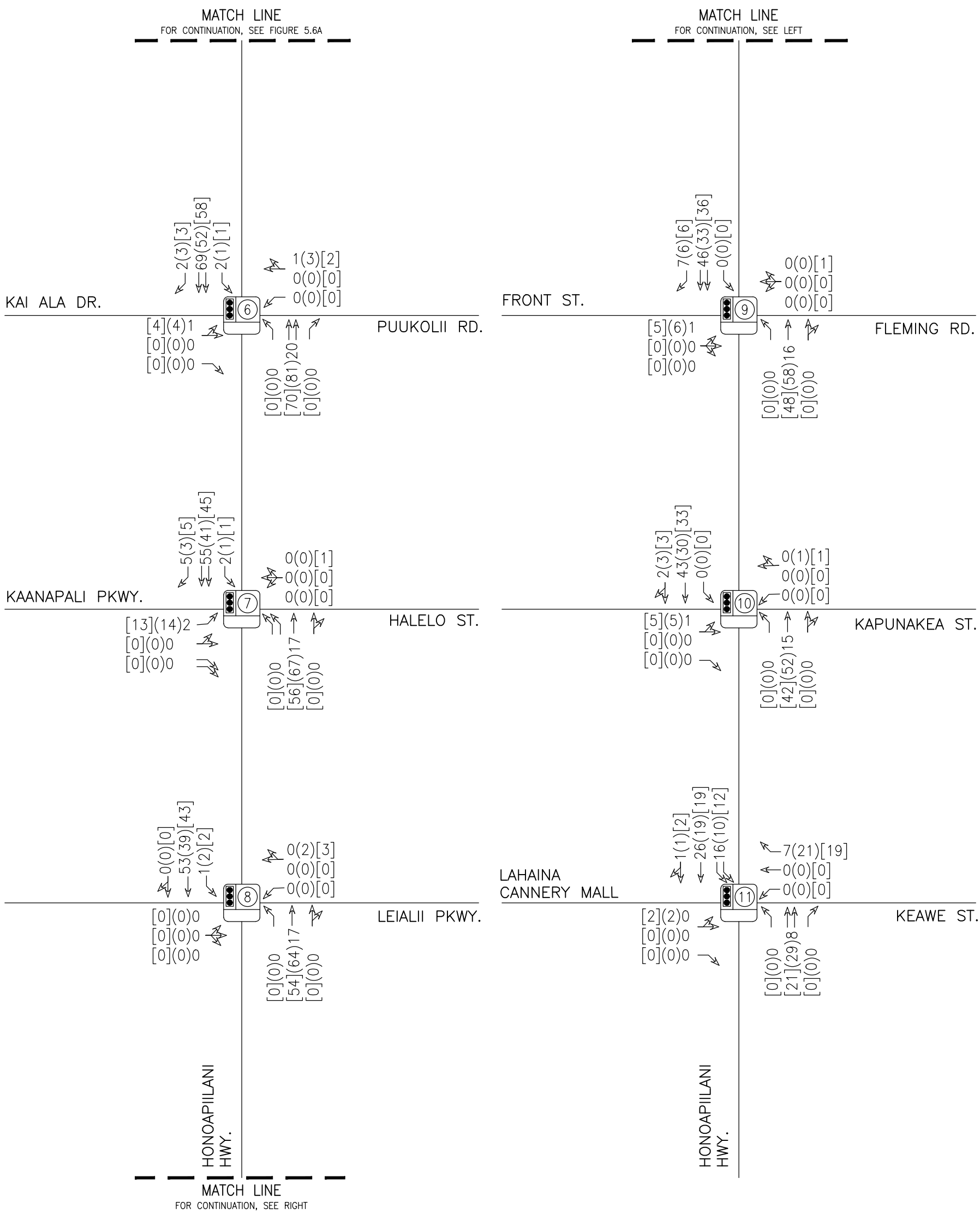

PULELEHUA

AUSTIN, TSUTSUMI & ASSOCIATES, INC.
ENGINEERS, SURVEYORS • HONOLULU, HAWAII

YEAR 2022 SCENARIO 3 PROJECT-GENERATED TRAFFIC

FIGURE 5.6B

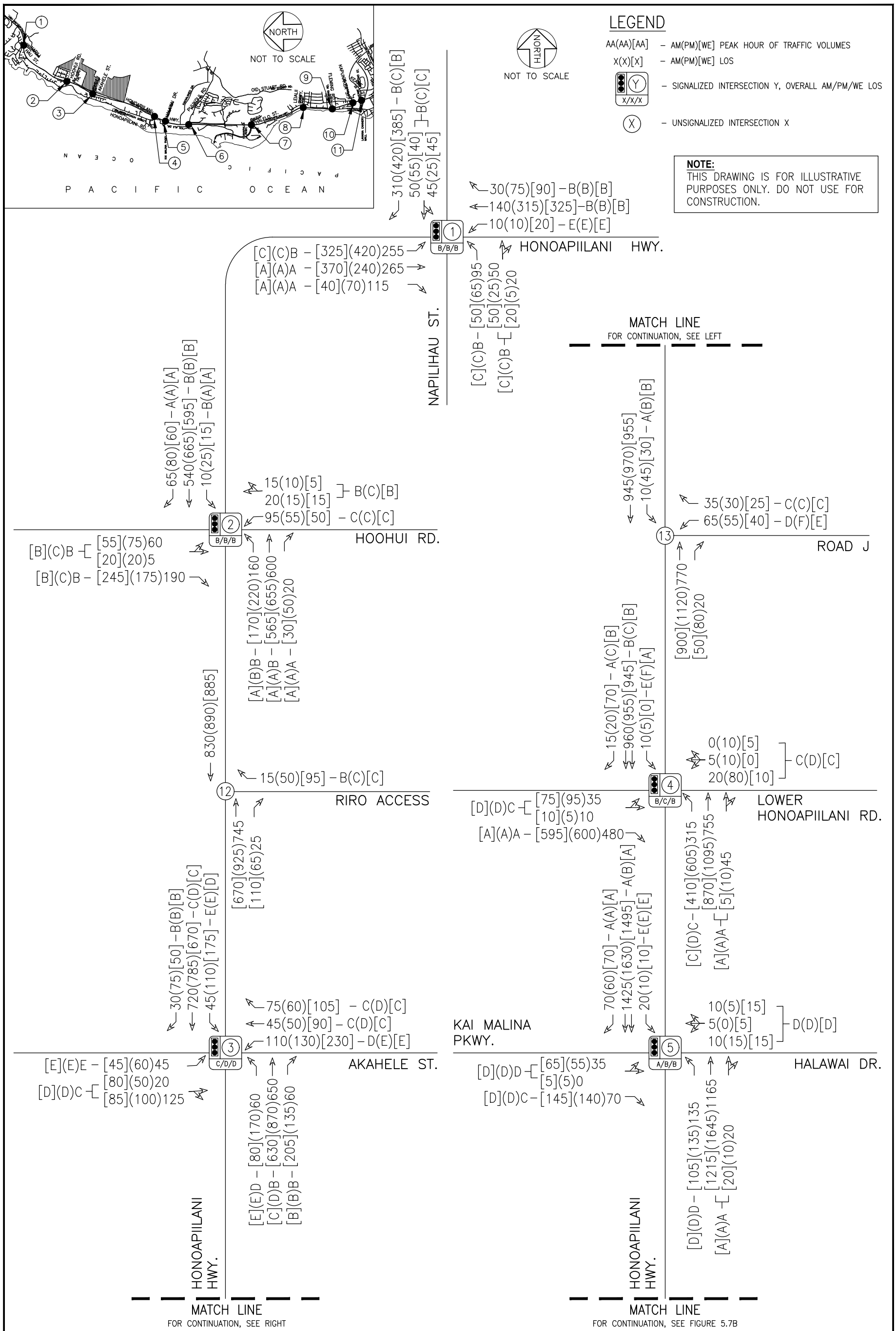

PULELEHUA	AUSTIN, TSUTSUMI & ASSOCIATES, INC. ENGINEERS, SURVEYORS • HONOLULU, HAWAII	FIGURE
	FUTURE YEAR 2022 SCENARIO 3 LANE CONFIGURATION, VOLUMES AND LOS	5.7A

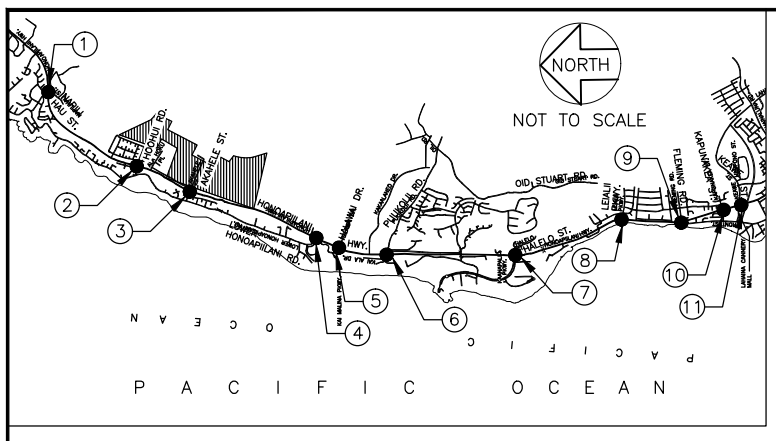

LEGEND

AA(AA)[AA] – AM(PM)[WE] PEAK HOUR OF TRAFFIC VOLUMES

X(X)[X] – AM(PM)[WE] LOS

Y – SIGNALIZED INTERSECTION Y, OVERALL AM/PM/WE LOS

X – UNSIGNALIZED INTERSECTION X

NOTE:
THIS DRAWING IS FOR ILLUSTRATIVE PURPOSES ONLY. DO NOT USE FOR CONSTRUCTION.

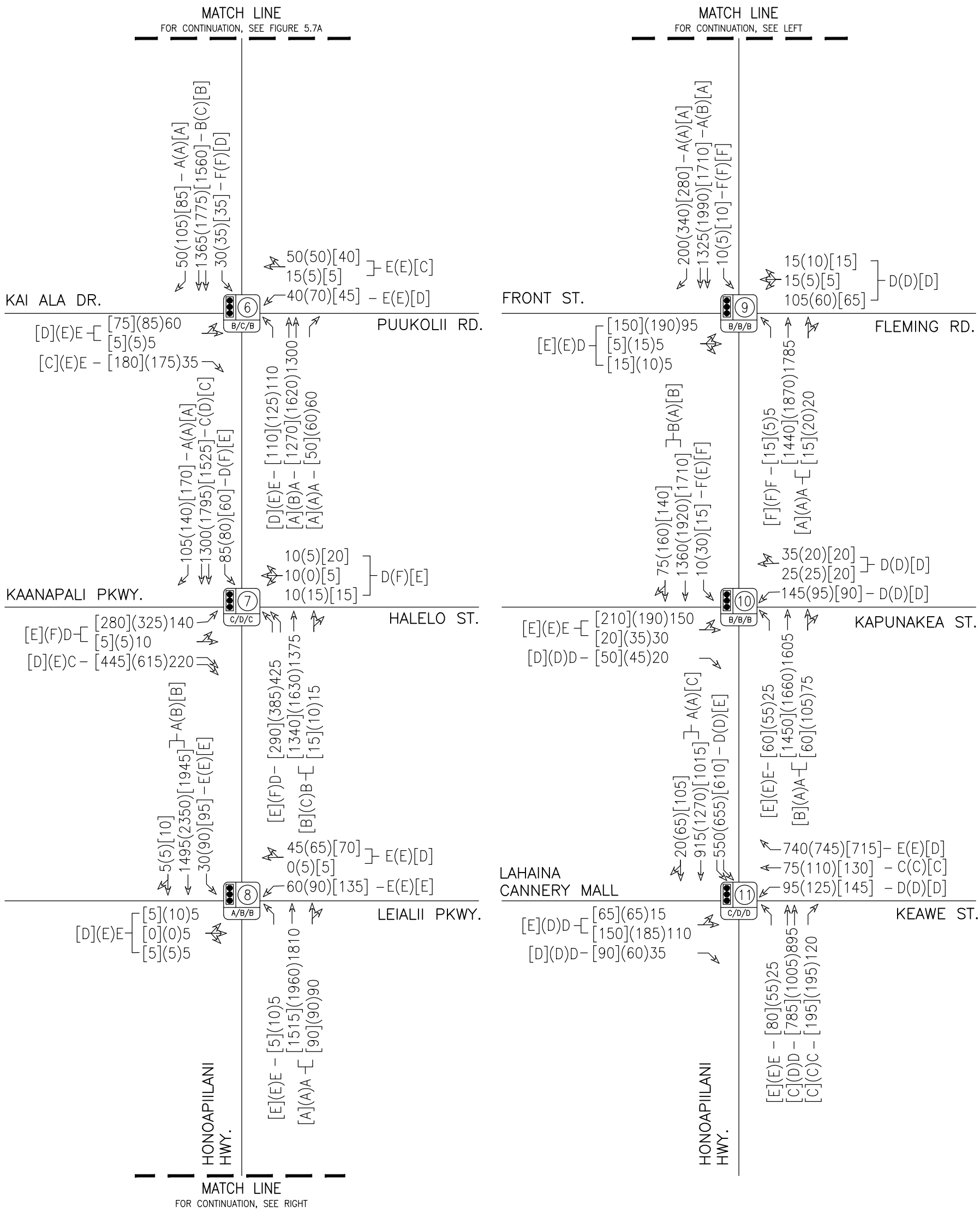

PULELEHUA	AUSTIN, TSUTSUMI & ASSOCIATES, INC. ENGINEERS, SURVEYORS • HONOLULU, HAWAII	FIGURE
	FUTURE YEAR 2022 SCENARIO 3 LANE CONFIGURATION, VOLUMES AND LOS	5.7B

Table 5.7: Base Year 2022 with Mitigation, Future Year 2022 Scenario 2 and Future Year 2022 Scenario 3 Level of Service Summary

	Base Year 2022 with Mitigation									Future Year 2022 Scenario 2									Future Year 2022 Scenario 3								
	AM			PM			WE			AM			PM			WE			AM			PM			WE		
Intersection	HCM Delay	v/c Ratio	LOS	HCM Delay	v/c Ratio	LOS	HCM Delay	v/c Ratio	LOS	HCM Delay	v/c Ratio	LOS	HCM Delay	v/c Ratio	LOS	HCM Delay	v/c Ratio	LOS	HCM Delay	v/c Ratio	LOS	HCM Delay	v/c Ratio	LOS	HCM Delay	v/c Ratio	LOS
1: Honoapiilani Highway & Napilihau Street																											
NB LT	18.9	0.75	B	19.7	0.82	B	19.5	0.77	B	18.9	0.75	B	20.6	0.84	C	20.6	0.80	C	18.9	0.76	B	21.5	0.85	C	21.2	0.81	C
NB TH	8.1	0.32	A	6.0	0.23	A	7.6	0.37	A	8.3	0.34	A	5.7	0.24	A	7.2	0.39	A	8.3	0.35	A	5.7	0.24	A	7.3	0.40	A
NB RT	6.9	0.08	A	5.2	0.05	A	5.9	0.03	A	7.0	0.08	A	4.9	0.05	A	5.4	0.03	A	7.0	0.09	A	4.9	0.05	A	5.4	0.03	A
EB LT/TH	15.0	0.26	B	20.4	0.29	C	17.8	0.28	B	15.3	0.25	B	22.2	0.31	C	20.2	0.31	C	15.5	0.25	B	22.9	0.30	C	20.7	0.31	C
EB RT	14.5	0.16	B	19.5	0.13	B	17.2	0.18	B	14.8	0.16	B	21.1	0.16	C	19.4	0.18	B	15.0	0.17	B	22.0	0.16	C	19.9	0.18	B
WB LT	17.4	0.30	B	22.8	0.28	C	19.5	0.18	B	17.8	0.31	B	24.8	0.30	C	22.3	0.21	C	18.1	0.32	B	25.9	0.33	C	22.9	0.23	C
WB TH/RT	14.7	0.22	B	19.4	0.13	B	17.7	0.27	B	15.0	0.21	B	20.9	0.14	C	19.9	0.29	B	15.2	0.21	B	21.8	0.13	C	20.4	0.29	C
SB LT	66.8	0.72	E	73.0	0.73	E	55.6	0.77	E	67.6	0.72	E	75.2	0.73	E	59.3	0.78	E	68.1	0.72	E	76.9	0.73	E	60.8	0.78	E
SB TH	12.9	0.31	B	17.9	0.60	B	15.2	0.57	B	13.6	0.33	B	18.8	0.63	B	16.4	0.60	B	14.0	0.34	B	19.5	0.64	B	16.9	0.62	B
SB RT	11.2	0.02	B	13.1	0.05	B	11.4	0.06	B	11.8	0.02	B	13.6	0.05	B	11.9	0.06	B	12.1	0.02	B	14.0	0.05	B	12.2	0.06	B
Overall	14.2	-	B	16.7	-	B	15.1	-	B	14.4	-	B	17.5	-	B	16.0	-	B	14.5	-	B	18.0	-	B	16.3	-	B
2: Honoapiilani Highway & Hoohui Road																											
NB LT	9.8	0.36	A	9.2	0.47	A	8.4	0.33	A	10.3	0.40	B	10.8	0.55	B	8.9	0.41	A	10.5	0.43	B	11.8	0.59	B	9.5	0.44	A
NB TH	10.8	0.64	B	9.3	0.66	A	8.9	0.57	A	11.3	0.68	B	9.5	0.68	A	9.0	0.62	A	11.8	0.72	B	9.7	0.69	A	9.1	0.63	A
NB RT	0.0	0.00	A	0.0	0.00	A	0.0	0.00	A	0.0	0.00	A	0.0	0.00	A	0.0	0.00	A	0.0	0.00	A	0.0	0.00	A	0.0	0.00	A
EB LT/TH	17.3	0.17	B	19.9	0.31	B	16.3	0.22	B	17.9	0.17	B	21.7	0.32	C	18.5	0.24	B	18.2	0.18	B	22.8	0.32	C	19.4	0.24	B
EB RT	16.3	0.06	B	18.4	0.07	B	15.6	0.10	B	16.9	0.07	B	20.1	0.07	C	17.7	0.10	B	17.1	0.07	B	21.1	0.06	C	18.6	0.09	B
WB LT	19.9	0.28	B	22.0	0.20	C	17.7	0.14	B	20.8	0.30	C	24.2	0.23	C	20.2	0.17	C	21.0	0.30	C	25.6	0.26	C	21.3	0.20	C
WB TH/RT	16.3	0.07	B	18.3	0.07	B	15.5	0.06	B	16.9	0.06	B	20.1	0.07	C	17.5	0.07	B	17.1	0.07	B	21.1	0.07	C	18.4	0.06	B
SB LT	9.7	0.03	A	8.1	0.07	A	8.0	0.04	A	10.0	0.03	B	8.3	0.07	A	8.0	0.04	A	10.3	0.03	B	8.4	0.07	A	8.1	0.04	A
SB TH	15.1	0.77	B	13.2	0.77	B	12.5	0.73	B	15.6	0.78	B	14.1	0.80	B	13.1	0.77	B	15.8	0.79	B	14.6	0.82	B	13.5	0.79	B
SB RT	9.5	0.05	A	8.0	0.06	A	8.1	0.04	A	9.6	0.05	A	8.0	0.07	A	7.8	0.04	A	9.7	0.05	A	8.0	0.06	A	7.9	0.04	A
Overall	13.3	-	B	11.8	-	B	11.1	-	B	13.8	-	B	12.6	-	B	11.6	-	B	14.0	-	B	13.1	-	B	12.0	-	B
3: Honoapiilani Highway & Akahele Street																											
NB LT	42.7	0.77	D	42.6	0.81	D	37.1	0.76	D	48.9	0.77	D	54.1	0.84	D	53.0	0.77	D	50.5	0.76	D	57.4	0.85	E	56.8	0.77	E
NB TH	10.6	0.65	B	13.0	0.76	B	10.0	0.60	A	16.0	0.72	B	34.5	0.93	C	28.9	0.87	C	17.7	0.77	B	40.0	0.94	D	32.9	0.89	C
NB RT	6.5	0.01	A	5.9	0.01	A	6.4	0.01	A	9.7	0.04	A	12.3	0.09	B	17.6	0.18	B	10.3	0.04	B	13.0	0.12	B	18.7	0.20	B
EB LT	44.0	0.72	D	52.9	0.77	D	42.6	0.71	D	55.2	0.78	E	63.3	0.77	E	62.4	0.78	E	56.6	0.78	E	66.7	0.77	E	66.3	0.77	E
EB TH/RT	24.0	0.08	C	32.8	0.04	C	23.8	0.06	C	29.1	0.12	C	46.8	0.52	D	44.7	0.71	D	30.7	0.13	C	52.1	0.63	D	50.3	0.77	D
WB LT	69.5	0.53	E	65.8	0.58	E	51.3	0.55	D	43.5	0.76	D	56.4	0.81	E	50.5	0.85	D	43.3	0.77	D	59.5	0.82	E	59.2	0.87	E
WB TH	25.3	0.03	C	35.5	0.03	D	24.8	0.03	C	26.8	0.14	C	39.3	0.17	D	29.6	0.20	C	27.4	0.14	C	42.0	0.19	D	32.2	0.21	C
WB RT	25.2	0.01	C	35.4	0.01	D	24.7	0.01	C	26.2	0.02	C	38.2	0.03	D	28.4	0.05	C	26.7	0.03	C	40.6	0.03	D	30.9	0.05	C
SB LT	112.0	0.71	F	126.5	0.72	F	110.8	0.70	F	58.6	0.79	E	57.5	0.79	E	47.7	0.81	D	56.4	0.78	E	60.3	0.80	E	51.8	0.83	D
SB TH	15.3	0.84	B	22.9	0.88	C	15.5	0.83	B	20.1	0.87	C	31.8	0.89	C	24.0	0.81	C	21.4	0.87	C	37.4	0.92	D	27.2	0.84	C
SB RT	7.8	0.02	A	10.6	0.05	B	8.3	0.03	A	10.3	0.02	B	14.1	0.05	B	13.6	0.03	B	10.7	0.02	B	14.5	0.05	B	14.2	0.03	B
Overall	15.7	-	B	21.5	-	C	15.8	-	B	22.8	-	C	37.5	-	D	32.8	-	C	24.3	-	C	42.2	-	D	36.8	-	D
4: Honoapiilani Highway & Lower Honoapiilani Road																											
NB LT	22.4	0.83	C	30.0	0.94	C	21.2	0.87	C	23.9	0.84	C	34.3	0.94	C	26.1	0.89	C	25.7	0.85	C	39.2	0.95	D	28.8	0.89	C
NB TH/RT	4.7	0.33	A	4.4	0.36	A	2.4	0.24	A	4.6	0.35	A	4.5	0.40	A	2.8	0.31	A	4.5	0.35	A	4.7	0.43	A	3.0	0.34	A
EB LT/TH	25.0	0.19	C	41.7	0.38	D	26.8	0.28	C	26.6	0.20	C	46.1	0.45	D	32.2	0.38	C	28.7	0.21	C	50.0	0.51	D	35.0	0.42	D
EB RT	0.0	0.00	A	0.0	0.00	A	0.0	0.00	A	0.0	0.00	A	0.0	0.00	A	0.0	0.00	A	0.0	0.00	A	0.0	0.00	A	0.0	0.00	A
WB LT/TH/RT	24.4	0.10	C	42.5	0.47	D	25.3	0.05	C	26.1	0.11	C	46.3	0.48	D	29.7	0.05	C	28.0	0.11	C	49.4	0.48	D	31.9	0.05	C
SB LT	50.7	0.74	D	87.3	0.72	F	0.0	0.00	A	52.8	0.74	D	91.8	0.73	F	0.0	0.00	A	55.5	0.74	E	96.2	0.73	F	0.0	0.00	A
SB TH	13.0	0.58	B	27.4	0.70	C	14.7	0.58	B	13.3	0.61	B	29.3	0.74	C	16.8	0.64	B	13.6	0.63	B	31.6	0.77	C	18.2	0.67	B
SB RT	9.2	0.00	A	19.5	0.01	B	11.0	0.03	B	9.2	0.01	A	20.0	0.01	C	11.8	0.05	B	9.1	0.01	A	20.8	0.01	C	12.5	0.06	B
Overall	12.0	-	B	20.9	-	C	12.6	-	B	12.3	-	B	22.4	-	C	14.0	-	B	12.7	-	B	24.2	-	C	15.0	-	B

Table 5.7: Base Year 2022 with Mitigation, Future Year 2022 Scenario 2 and Future Year 2022 Scenario 3 Level of Service Summary Cont'd

	Base Year 2022 with Mitigation									Future Year 2022 Scenario 2									Future Year 2022 Scenario 3								
	AM			PM			WE			AM			PM			WE			AM			PM			WE		
Intersection	HCM Delay	v/c Ratio	LOS	HCM Delay	v/c Ratio	LOS	HCM Delay	v/c Ratio	LOS	HCM Delay	v/c Ratio	LOS	HCM Delay	v/c Ratio	LOS	HCM Delay	v/c Ratio	LOS	HCM Delay	v/c Ratio	LOS	HCM Delay	v/c Ratio	LOS	HCM Delay	v/c Ratio	LOS
5: Honoapiilani Highway & Kai Malina Parkway/Halawai Drive																											
NB LT	31.8	0.79	C	43.8	0.82	D	35.3	0.78	D	34.2	0.79	C	46.6	0.82	D	40.0	0.79	D	36.3	0.80	D	48.2	0.83	D	41.8	0.79	D
NB TH/RT	4.1	0.45	A	7.1	0.60	A	4.9	0.41	A	4.1	0.47	A	7.7	0.64	A	5.2	0.48	A	4.1	0.47	A	8.3	0.67	A	5.4	0.51	A
EB LT/TH	30.4	0.16	C	37.0	0.22	D	30.2	0.25	C	32.8	0.19	C	39.4	0.25	D	34.7	0.31	C	35.1	0.20	D	40.9	0.25	D	36.3	0.31	D
EB RT	30.3	0.01	C	36.2	0.03	D	29.5	0.04	C	32.5	0.01	C	38.4	0.03	D	33.5	0.04	C	34.7	0.01	C	39.7	0.03	D	35.1	0.04	D
WB LT/TH/RT	30.9	0.11	C	38.1	0.08	D	29.5	0.10	C	32.9	0.11	C	40.7	0.09	D	33.9	0.12	C	35.1	0.12	D	42.2	0.09	D	35.7	0.12	D
SB LT	53.5	0.78	D	73.1	0.78	E	59.7	0.75	E	56.9	0.79	E	76.8	0.78	E	66.1	0.76	E	60.2	0.85	E	79.0	0.79	E	68.5	0.77	E
SB TH	7.7	0.61	A	12.5	0.72	B	8.8	0.63	A	8.0	0.63	A	13.6	0.75	B	9.5	0.68	A	8.2	0.66	A	14.3	0.77	B	9.8	0.70	A
SB RT	4.5	0.04	A	6.4	0.04	A	5.1	0.04	A	4.5	0.05	A	6.5	0.04	A	5.1	0.05	A	4.4	0.05	A	6.5	0.04	A	5.0	0.04	A
Overall	8.1	-	A	12.1	-	B	9.3	-	A	8.3	-	A	12.9	-	B	9.9	-	A	8.6	-	A	13.5	-	B	10.1	-	B
6: Honoapiilani Highway & Kai Ala Drive/Puukolii Road																											
NB LT	74.0	0.85	E	78.1	0.86	E	39.8	0.78	D	74.1	0.85	E	77.8	0.86	E	42.3	0.79	D	74.1	0.85	E	77.6	0.86	E	43.2	0.79	D
NB TH	6.2	0.48	A	9.8	0.58	A	8.2	0.49	A	6.5	0.50	A	10.8	0.63	B	8.8	0.56	A	6.8	0.51	A	11.7	0.67	B	9.0	0.59	A
NB RT	3.8	0.04	A	5.4	0.04	A	5.5	0.03	A	3.8	0.04	A	5.5	0.04	A	5.4	0.03	A	4.0	0.04	A	5.6	0.04	A	5.3	0.03	A
EB LT/TH	68.7	0.38	E	67.2	0.37	E	31.3	0.23	C	68.7	0.38	E	67.1	0.39	E	34.3	0.28	C	68.5	0.40	E	67.0	0.40	E	35.4	0.30	D
EB RT	63.3	0.01	E	63.7	0.13	E	30.1	0.05	C	63.3	0.01	E	63.7	0.18	E	32.5	0.05	C	62.8	0.01	E	63.6	0.20	E	33.3	0.05	C
WB LT	75.0	0.39	E	78.4	0.54	E	34.6	0.21	C	75.0	0.39	E	78.7	0.54	E	38.2	0.24	D	75.0	0.39	E	79.2	0.55	E	39.6	0.25	D
WB TH/RT	64.1	0.10	E	62.5	0.03	E	29.9	0.03	C	64.1	0.10	E	62.1	0.03	E	32.3	0.03	C	63.6	0.09	E	61.6	0.03	E	33.2	0.03	C
SB LT	82.9	0.69	F	89.0	0.78	F	42.4	0.58	D	84.8	0.76	F	89.0	0.78	F	45.3	0.62	D	84.8	0.76	F	89.0	0.78	F	46.3	0.63	D
SB TH	10.0	0.52	B	18.1	0.73	B	13.6	0.73	B	10.5	0.55	B	19.7	0.77	B	14.8	0.77	B	11.2	0.58	B	21.1	0.80	C	15.4	0.79	B
SB RT	6.0	0.03	A	8.5	0.07	A	7.4	0.05	A	6.0	0.03	A	8.8	0.08	A	7.2	0.05	A	6.1	0.03	A	9.0	0.08	A	7.2	0.06	A
Overall	13.9	-	B	19.9	-	B	13.6	-	B	14.2	-	B	20.9	-	C	14.5	-	B	14.5	-	B	21.8	-	C	14.9	-	B
7: Honoapiilani Highway & Kaanapali Parkway/Halelo Street																											
NB LT	40.7	0.75	D	91.4	0.85	F	49.6	0.71	D	43.5	0.76	D	96.6	0.86	F	57.8	0.74	E	46.4	0.77	D	99.6	0.86	F	61.7	0.75	E
NB TH/RT	16.2	0.68	B	22.0	0.66	C	13.7	0.56	B	16.4	0.69	B	24.0	0.70	C	15.1	0.61	B	16.2	0.68	B	25.0	0.72	C	15.6	0.63	B
EB LT/TH	44.2	0.46	D	86.1	0.60	F	48.6	0.58	D	47.3	0.48	D	92.8	0.65	F	56.3	0.65	E	50.4	0.49	D	97.5	0.69	F	60.0	0.67	E
EB RT	28.3	0.08	C	63.9	0.51	E	36.4	0.34	D	30.4	0.08	C	68.0	0.52	E	42.0	0.35	D	32.6	0.08	C	70.6	0.52	E	44.7	0.35	D
WB LT/TH/RT	44.7	0.18	D	100.0	0.23	F	54.7	0.32	D	47.8	0.18	D	105.7	0.24	F	63.6	0.35	E	50.9	0.19	D	108.9	0.24	F	67.8	0.36	E
SB LT	46.2	0.57	D	112.3	0.72	F	53.9	0.50	D	49.3	0.60	D	123.6	0.74	F	62.7	0.56	E	52.5	0.61	D	130.1	0.76	F	66.8	0.57	E
SB TH	22.1	0.75	C	41.1	0.88	D	20.8	0.76	C	22.6	0.76	C	44.3	0.90	D	22.7	0.78	C	23.1	0.77	C	46.7	0.91	D	23.5	0.79	C
SB RT	9.8	0.08	A	8.2	0.11	A	6.9	0.13	A	9.7	0.09	A	8.2	0.11	A	6.6	0.13	A	9.7	0.09	A	8.3	0.11	A	6.6	0.14	A
Overall	23.7	-	C	44.8	-	D	24.1	-	C	24.5	-	C	47.8	-	D	26.7	-	C	25.1	-	C	49.8	-	D	27.9	-	C
8: Honoapiilani Highway & Leialii Parkway																											
NB LT	75.8	0.45	E	69.1	0.50	E	72.4	0.44	E	75.6	0.45	E	73.9	0.50	E	71.9	0.44	E	75.5	0.45	E	73.7	0.50	E	71.7	0.44	E
NB TH/RT	8.8	0.70	A	2.4	0.75	A	2.9	0.60	A	9.0	0.71	A	2.6	0.78	A	3.4	0.66	A	9.2	0.72	A	2.8	0.80	A	3.6	0.68	A
EB LT/TH/RT	58.6	0.06	E	57.0	0.07	E	50.0	0.03	D	58.6	0.06	E	61.4	0.07	E	50.0	0.03	D	58.6	0.06	E	61.5	0.07	E	50.0	0.03	D
WB LT	62.0	0.37	E	62.5	0.54	E	58.1	0.63	E	62.0	0.37	E	67.4	0.56	E	58.1	0.63	E	62.0	0.37	E	67.4	0.56	E	58.1	0.63	E
WB TH/RT	58.6	0.01	E	56.7	0.05	E	50.3	0.05	D	58.6	0.01	E	60.9	0.05	E	50.3	0.05	D	58.6	0.01	E	61.0	0.05	E	50.3	0.05	D
SB LT	68.8	0.52	E	66.2	0.78	E	76.2	0.79	E	68.8	0.52	E	74.5	0.80	E	78.6	0.80	E	68.8	0.52	E	74.5	0.80	E	78.6	0.80	E
SB TH/RT	5.2	0.51	A	13.3	0.83	B	10.2	0.70	B	5.5	0.53	A	14.1	0.85	B	11.3	0.74	B	5.7	0.55	A	15.1	0.86	B	11.8	0.76	B
Overall	9.1	-	A	10.8	-	B	11.0	-	B	9.3	-	A	11.6	-	B	11.6	-	B	9.4	-	A	12.1	-	B	11.9	-	B
9: Honoapiilani Highway & Front Street/Flemming Road																											
NB LT	89.8	0.73	F	96.3	0.74	F	87.9	0.84	F	88.9	0.73	F	100.6	0.75	F	85.9	0.84	F	88.5	0.73	F	98.7	0.75	F	85.3	0.84	F
NB TH/RT	7.6	0.67	A	1.9	0.71	A	16.3	0.50	B	7.8	0.68	A	2.4	0.74	A	7.6	0.55	A	7.9	0.69	A	2.7	0.77	A	8.0	0.58	A
EB LT/TH/RT	52.6	0.48	D	59.5	0.72	E	57.7	0.66	E	52.6	0.48	D	65.2	0.75	E	57.5	0.68	E	53.1	0.50	D	65.4	0.75	E	57.6	0.68	E
WB LT/TH/RT	54.3	0.61	D	49.7	0.24	D	52.3	0.32	D	54.3	0.61	D	52.5	0.23	D	51.3	0.30	D	54.4	0.61	D	52.0	0.23	D	50.8	0.30	D
SB LT	88.2	0.81	F	87.4	0.74	F	88.0	0.82	F	87.7	0.81	F	92.2	0.75	F	86.3	0.82	F	87.3	0.81	F	90.8	0.75	F	85.5	0.82	F
SB TH	4.9	0.48	A	11.8	0.79	B	7.7	0.64	A	5.1	0.50	A	13.2	0.81	B	8.7	0.68	A	5.2	0.52	A	13.9	0.83	B	9.2	0.70	A
SB RT	3.2	0.11	A	5.6	0.24	A	4.3	0.17	A	3.2	0.12	A	6.1	0.24	A	4.7	0.19	A	3.2	0.13	A	6.3	0.25	A	4.8	0.19	A
Overall	9.9	-	A	10.4	-	B	14.8	-	B	10.0	-	A	11.5	-	B	11.8	-	B	10.0	-	B	11.9	-	B	12.1	-	B

Table 5.7: Base Year 2022 with Mitigation, Future Year 2022 Scenario 2 and Future Year 2022 Scenario 3 Level of Service Summary Cont'd

	Base Year 2022 with Mitigation									Future Year 2022 Scenario 2									Future Year 2022 Scenario 3								
	AM			PM			WE			AM			PM			WE			AM			PM			WE		
Intersection	HCM Delay	v/c Ratio	LOS	HCM Delay	v/c Ratio	LOS	HCM Delay	v/c Ratio	LOS	HCM Delay	v/c Ratio	LOS	HCM Delay	v/c Ratio	LOS	HCM Delay	v/c Ratio	LOS	HCM Delay	v/c Ratio	LOS	HCM Delay	v/c Ratio	LOS	HCM Delay	v/c Ratio	LOS
10: Honoapiilani Highway & Kapunakea Street																											
NB LT	74.7	0.79	E	67.6	0.79	E	71.9	0.79	E	74.0	0.79	E	83.9	0.82	F	70.4	0.79	E	73.5	0.79	E	79.4	0.82	E	70.6	0.78	E
NB TH/RT	1.3	0.66	A	1.3	0.71	A	2.8	0.58	A	1.3	0.68	A	1.2	0.74	A	3.6	0.64	A	1.3	0.69	A	1.0	0.76	A	13.1	0.66	B
EB LT/TH	64.2	0.72	E	62.3	0.75	E	59.7	0.74	E	64.5	0.72	E	69.3	0.77	E	58.0	0.75	E	64.5	0.72	E	71.2	0.79	E	58.1	0.75	E
EB RT	48.3	0.01	D	43.6	0.03	D	42.6	0.04	D	47.9	0.01	D	46.8	0.03	D	41.2	0.04	D	47.9	0.01	D	46.7	0.03	D	40.8	0.04	D
WB LT	55.1	0.51	E	46.9	0.29	D	45.3	0.26	D	54.6	0.50	D	50.2	0.29	D	43.7	0.25	D	54.6	0.50	D	50.1	0.29	D	43.3	0.24	D
WB TH/RT	49.3	0.10	D	44.1	0.08	D	42.9	0.07	D	48.9	0.10	D	47.3	0.08	D	41.6	0.07	D	48.9	0.10	D	47.3	0.08	D	41.2	0.07	D
SB LT	101.8	0.83	F	72.4	0.80	E	85.2	0.84	F	101.4	0.83	F	74.3	0.79	E	84.3	0.84	F	100.9	0.83	F	74.0	0.79	E	83.7	0.84	F
SB TH/RT	10.3	0.56	B	5.5	0.89	A	3.6	0.78	A	10.9	0.58	B	5.9	0.90	A	9.9	0.83	A	11.2	0.60	B	6.5	0.92	A	10.8	0.85	B
Overall	11.9	-	B	9.7	-	A	9.7	-	A	12.0	-	B	10.5	-	B	12.9	-	B	12.0	-	B	10.8	-	B	17.2	-	B
11: Honoapiilani Highway & Keawe Street																											
NB LT	79.8	0.79	E	69.3	0.78	E	64.0	0.79	E	79.8	0.79	E	79.7	0.78	E	64.0	0.79	E	79.8	0.79	E	79.7	0.78	E	64.0	0.79	E
NB TH	32.3	0.62	C	39.4	0.75	D	31.0	0.55	C	34.9	0.66	C	45.2	0.80	D	33.5	0.61	C	36.9	0.69	D	50.8	0.87	D	34.4	0.63	C
NB RT	23.6	0.08	C	28.6	0.21	C	25.9	0.20	C	25.1	0.08	C	31.8	0.23	C	27.2	0.21	C	26.2	0.08	C	33.6	0.23	C	27.6	0.21	C
EB LT/TH	47.7	0.35	D	63.6	0.79	E	61.5	0.77	E	46.2	0.33	D	57.2	0.73	E	62.7	0.78	E	44.9	0.32	D	54.1	0.69	D	62.8	0.78	E
EB RT	43.9	0.02	D	42.9	0.03	D	44.5	0.04	D	42.5	0.01	D	42.5	0.03	D	43.6	0.04	D	41.4	0.01	D	40.8	0.03	D	43.5	0.04	D
WB LT	38.3	0.29	D	40.7	0.58	D	42.2	0.62	D	37.1	0.28	D	43.8	0.59	D	41.9	0.63	D	36.1	0.27	D	40.5	0.54	D	41.9	0.63	D
WB TH	35.5	0.14	D	33.9	0.20	C	34.6	0.25	C	34.4	0.14	C	35.2	0.20	D	33.9	0.25	C	33.4	0.14	C	33.6	0.19	C	33.8	0.24	C
WB RT	65.7	0.92	E	64.4	0.92	E	43.2	0.68	D	66.5	0.93	E	69.0	0.93	E	47.6	0.78	D	67.3	0.93	E	70.9	0.94	E	51.1	0.82	D
SB LT	51.4	0.91	D	46.4	0.95	D	62.2	0.88	E	51.2	0.92	D	47.4	0.95	D	57.5	0.89	E	51.0	0.92	D	46.5	0.95	D	57.3	0.89	E
SB TH/RT	1.0	0.45	A	1.3	0.70	A	41.1	0.58	D	1.1	0.47	A	1.4	0.73	A	31.9	0.62	C	1.2	0.49	A	1.4	0.76	A	32.2	0.63	C
Overall	32.1	-	C	32.2	-	C	43.9	-	D	32.8	-	C	34.3	-	C	41.2	-	D	33.4	-	C	35.7	-	D	41.8	-	D
12: RIRO Access & Honoapiilani Highway																											
WB RT										14.3	0.04	B	19.4	0.18	C	15.5	0.23	C	14.9	0.04	B	20.1	0.19	C	16.2	0.24	C
Overall										0.1	-	-	0.5	-	-	0.9	-	-	0.1	-	-	0.5	-	-	0.9	-	-
13: Honoapiilani Highway & Road J																											
WB LT																			32.1	0.35	D	53.7	0.46	F	40.7	0.40	E
WB RT																			15.9	0.10	C	24.2	0.15	C	18.1	0.12	C
SB LT																			9.7	0.01	A	12.5	0.09	B	10.8	0.07	B
Overall																			1.5	-	-	1.9	-	-	1.7	-	-
14: Road A & Akahele Street																											
NB LT/TH/RT										11.4	0.08	B	15.6	0.22	C	35.5	0.54	E	12.1	0.10	B	17.0	0.25	C	46.3	0.63	E
EB LT										7.5	0.03	A	7.6	0.08	A	7.8	0.13	A	7.6	0.04	A	7.6	0.09	A	7.8	0.14	A
WB LT										7.4	0.00	A	7.5	0.00	A	7.7	0.00	A	7.4	0.00	A	7.6	0.00	A	7.7	0.00	A
SB LT/TH/RT										9.5	0.09	A	11.1	0.21	B	10.4	0.23	B	9.7	0.10	A	11.5	0.22	B	10.6	0.24	B
Overall										4.6	-	-	6.9	-	-	9.7	-	-	4.7	-	-	6.8	-	-	11.1	-	-
15: Road C & Akahele Street																											
NB LT/TH/RT										9.0	0.01	A	9.9	0.07	A	9.8	0.07	A	9.8	0.12	A	10.2	0.09	B	10.1	0.09	B
EB LT/TH/RT										7.3	0.01	A	7.3	0.02	A	7.3	0.01	A	7.3	0.01	A	7.3	0.02	A	7.3	0.02	A
WB LT/TH/RT										7.3	0.00	A	7.4	0.00	A	7.4	0.00	A	7.3	0.00	A	7.5	0.00	A	7.4	0.00	A
SB LT/TH/RT										8.8	0.04	A	9.1	0.03	A	9.1	0.03	A	8.8	0.04	A	9.1	0.04	A	9.1	0.04	A
Overall										4.4	-	-	4.3	-	-	4.6	-	-	6.5	-	-	4.5	-	-	4.8	-	-
16: Road G & Road J																											
NB LT/RT																			8.5	0.03	A	9.6	0.05	A	9.6	0.06	A
WB LT/TH																			7.3	0.00	A	7.5	0.00	A	7.5	0.00	A
Overall																			2.1	-	-	1.9	-	-	2.1	-	-
17: Road F & Road J																											
NB LT/RT																			3.6	0.04	A	3.6	0.03	A	3.7	0.03	A
EB TH/RT																			3.4	0.02	A	4.0	0.09	A	3.8	0.07	A
WB LT/TH																			3.8	0.05	A	3.6	0.03	A	3.6	0.04	A
Overall																			3.6	-	A	3.9	-	A	3.7	-	A

5.5 Future Year 2027 Scenario 4 Analysis

As discussed earlier, a future elementary school will be planned/developed by the Department of Education (DOE). Since the development of the school is not in the direct controller of the Pulelehua development, the timeframe for this school has yet to be determined. For purposes of this TIAR, a forecast build-out of 2027 with inclusion of the elementary school as part of the Project was assumed as Scenario 4 for the TIAR.

By completion of Scenario 4 in Future Year 2027, the Project is projected to generate an additional 312(101)[0] new external trips during the AM(PM)[WE] peak hours of traffic. Elementary school students in Lahaina are currently serviced primarily by Princess Nahienaena Elementary School and King Kamehameha III Elementary School, further south of Keawe Street. It's anticipated that upon opening of the new Elementary School in the Project site, many students will transfer to this site from the Kaanapali, Honokowai, Kahana, Napili and Kapalua regions. Trips generated by the new elementary school were rerouted from existing traffic along Honoapiilani Highway to the new site. As a result, the majority of traffic increases were turning movement traffic turning into and out of Akahele Street on the east leg of its intersection with Honoapiilani Highway. Traffic reductions to various through movements along the highway were a result of the reroute.

5.5.1 Future Year 2027 Scenario 4 Intersection Analysis

With the additional trips generated by Scenario 4 and background traffic growth, several study intersections are forecast to operate with increased delay from Base Year 2027 without the Project and Future Year 2022 with Scenarios 1, 2 and 3. All intersection movements forecast to operate at LOS E/F for Future Year 2022 Scenario 3 conditions will continue to operate at LOS E/F conditions during Future Year 2027 Scenario 4.

<u>[3] Honoapiilani Highway/Akahele Street</u>

With the increase in turning movements at Akahele Street due to traffic generated by Scenario 4, several minor street and left-turn movements will worsen to LOS E/F during the peak hours of traffic. However, the major through movements will operate at LOS D or better. All left-turn storage lane lengths recommended in Table 5.5 accounts for traffic generated for the Future Year 2027 Scenario 4.

<u>[7] Honoapiilani Highway/Kaanapali Parkway</u>

As discussed in Section 4.5.1, this intersection will worsen from overall LOS C(D)[C] during Base Year 2022 to LOS C(E)[C] during Base Year 2027 even without the Project. Therefore, during Future Year 2027 with Project, overall LOS will generally be maintained at LOS C(E)[D]. However, the major through movements will continue operating at LOS D or better during all peak hours. Based on Scenario 4 trip distribution, the Project is anticipated to reduce some of the through traffic along Honoapiilani Highway due to the Elementary School reroutes.

<u>[10] Honoapiilani Highway/Kapunakea Street</u>

During the PM peak hour of traffic, the southbound shared through/right-turn movement is expected to operate at over-capacity conditions. The eastbound approach could be restriped to provide an exclusive left-turn lane and a shared through/right-turn lane, consistent with the striping on the westbound approach. With the restriping, all movements will operate under-

capacity with the major through movements operating at LOS B or better during all peak hours of traffic. Numerous left-turn movements will continue operating at LOS E/F due to the long coordinated cycle length.

[11] Honoapiilani Highway/Keawe Street

During the PM peak hour of traffic, the westbound right-turn movement is expected to operate at LOS F and over-capacity conditions because the intersection serves as a critical junction between Honoapiilani Highway and Lahaina Bypass Road. Plans for Lahaina Bypass Road Phase 1C will extend the roadway further north to the Kaanapali area and provide a new connection between the bypass road and Honoapiilani Highway, which will help alleviate the high volume turning movements at the Honoapiilani Highway/Keawe Street intersection. Because there is currently no set completion date for Phase 1C, the bypass extension is not included as a mitigative measure. However, the extension is expected to improve operations at the Honoapiilani Highway/Keawe Street intersection when completed.

Figures 5.8 illustrate the Project-generated trips for Future Year 2027 Scenario 4. Figure 5.9 illustrates the Future Year 2027 Scenario 4 forecast traffic volumes and LOS for the study intersection movements. Table 5.8 summarizes the Future Year 2027 Scenario 4 LOS at the study intersections compared to Base Year 2027 and Future Year 2022 Scenario 3. LOS worksheets are provided in Appendix C. Full Future Year 2022 and 2027 roadway improvements for Scenarios 1-4 are listed in Appendix D.

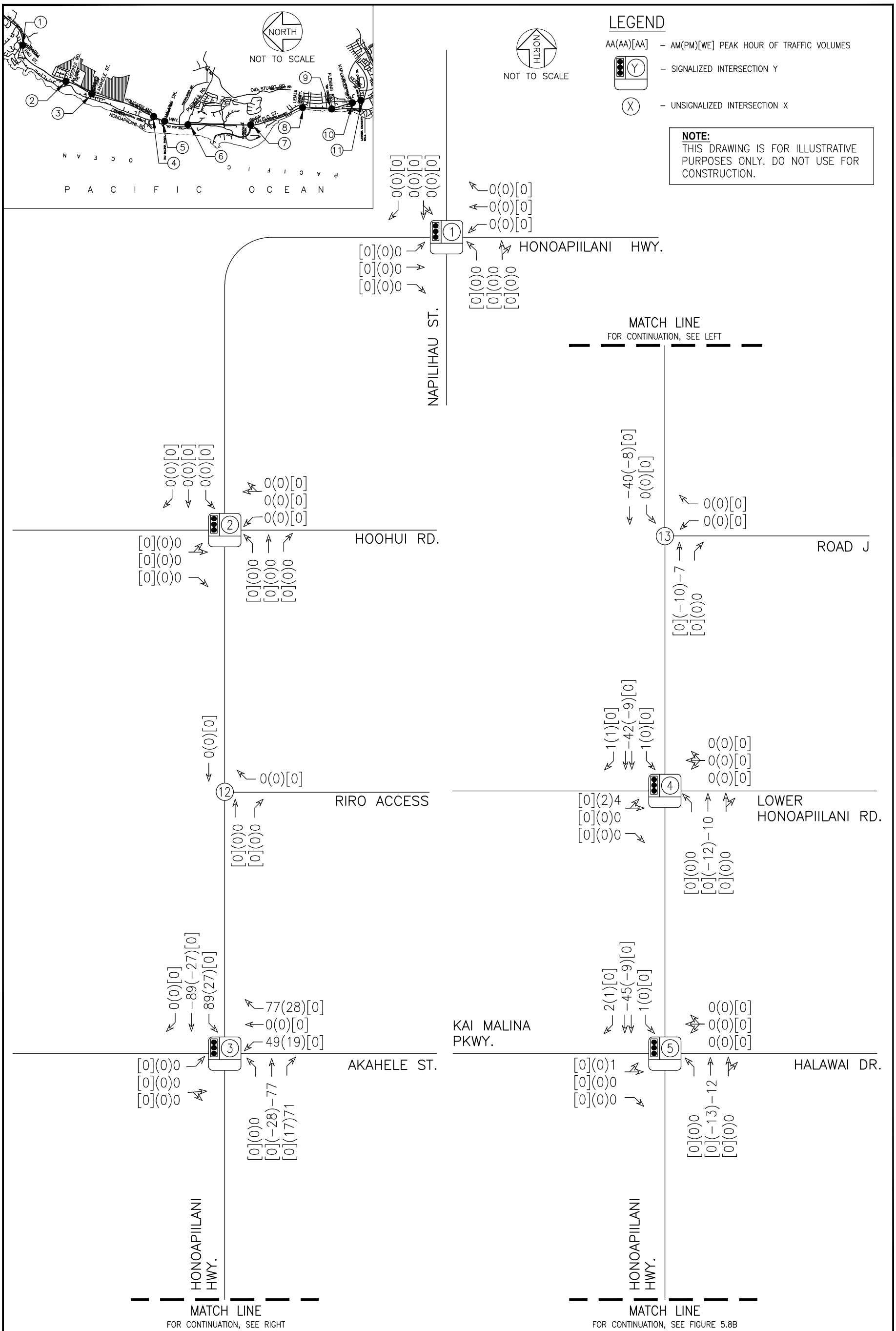

PULELEHUA

AUSTIN, TSUTSUMI & ASSOCIATES, INC.
ENGINEERS, SURVEYORS • HONOLULU, HAWAII

YEAR 2027 SCENARIO 4 PROJECT-GENERATED TRAFFIC

FIGURE 5.8A

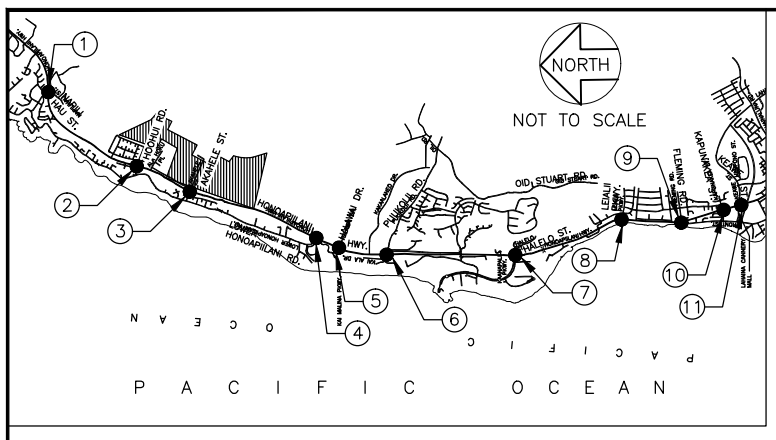

LEGEND

NORTH
NOT TO SCALE

AA(AA)[AA] – AM(PM)[WE] PEAK HOUR OF TRAFFIC VOLUMES

Y – SIGNALIZED INTERSECTION Y

X – UNSIGNALIZED INTERSECTION X

NOTE:
THIS DRAWING IS FOR ILLUSTRATIVE PURPOSES ONLY. DO NOT USE FOR CONSTRUCTION.

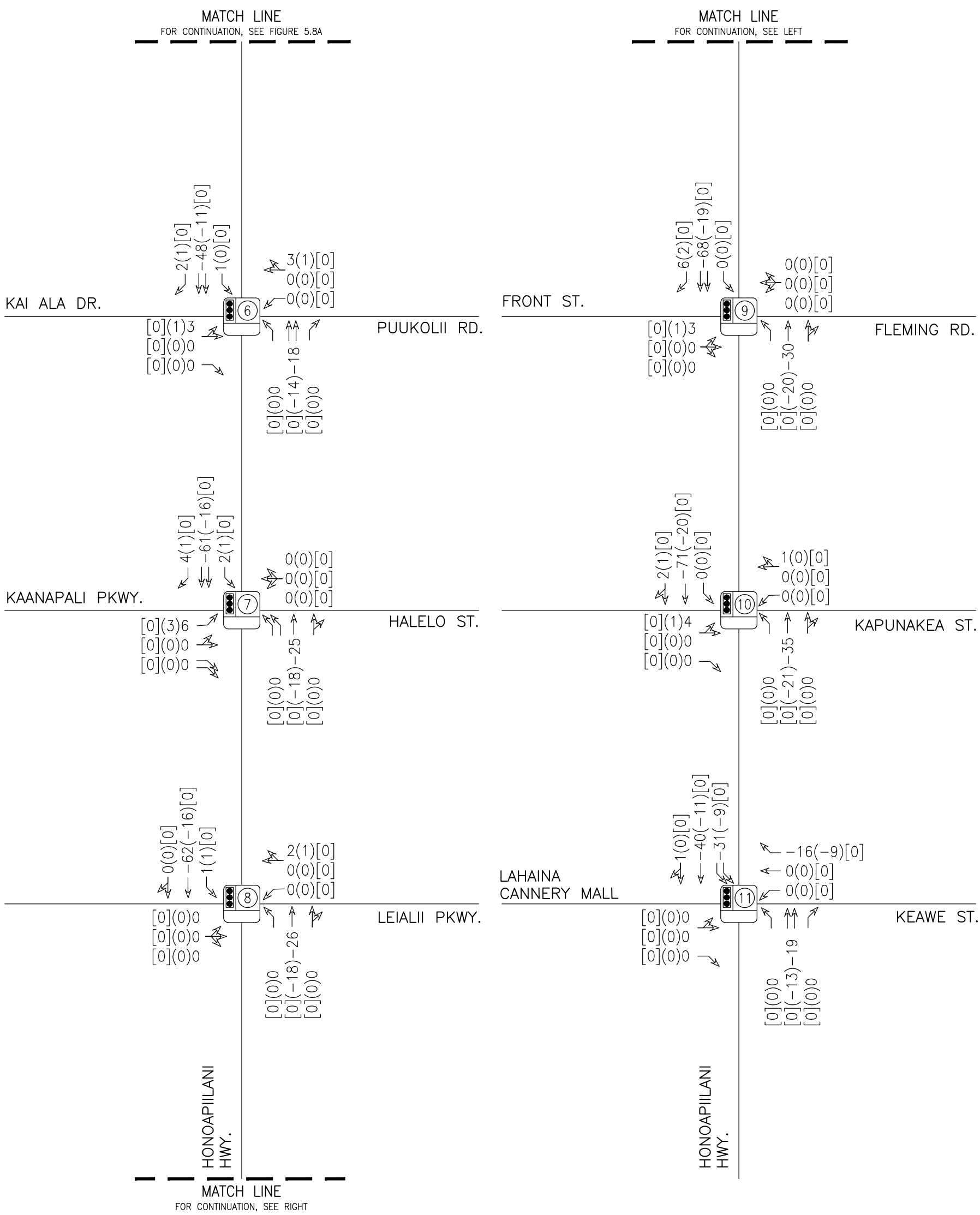

PULELEHUA

AUSTIN, TSUTSUMI & ASSOCIATES, INC.
ENGINEERS, SURVEYORS • HONOLULU, HAWAII

YEAR 2027 SCENARIO 4 PROJECT-GENERATED TRAFFIC

FIGURE
5.8B

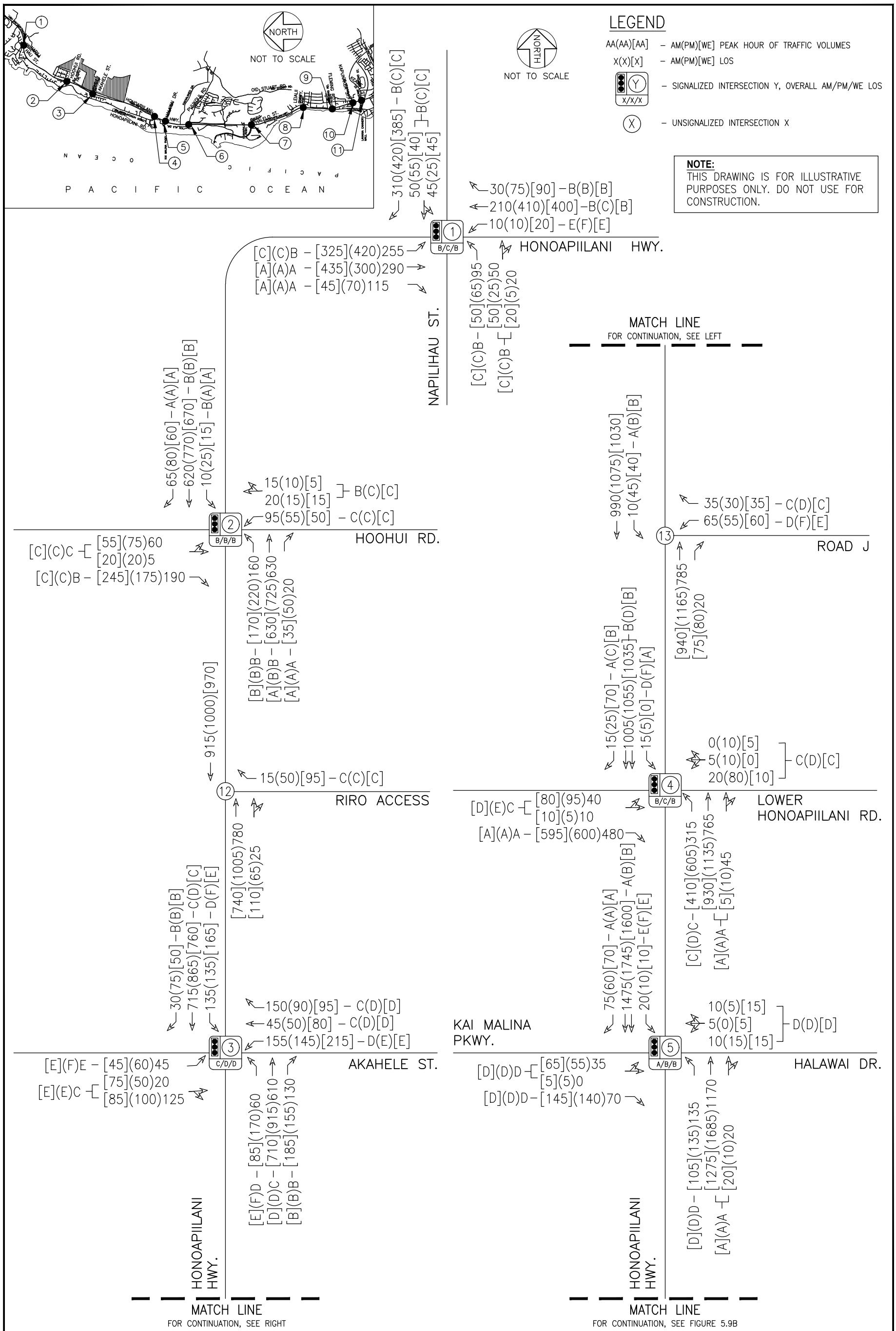

PULELEHUA

AUSTIN, TSUTSUMI & ASSOCIATES, INC.
ENGINEERS, SURVEYORS • HONOLULU, HAWAII

FUTURE YEAR 2027 SCENARIO 4 LANE CONFIGURATION, VOLUMES AND LOS

FIGURE 5.9A

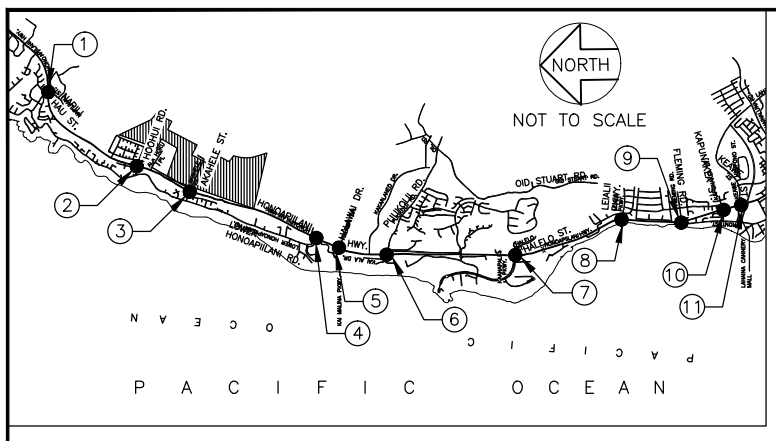

LEGEND

AA(AA)[AA] – AM(PM)[WE] PEAK HOUR OF TRAFFIC VOLUMES

X(X)[X] – AM(PM)[WE] LOS

Y – SIGNALIZED INTERSECTION Y, OVERALL AM/PM/WE LOS

X – UNSIGNALIZED INTERSECTION X

NOTE:
THIS DRAWING IS FOR ILLUSTRATIVE PURPOSES ONLY. DO NOT USE FOR CONSTRUCTION.

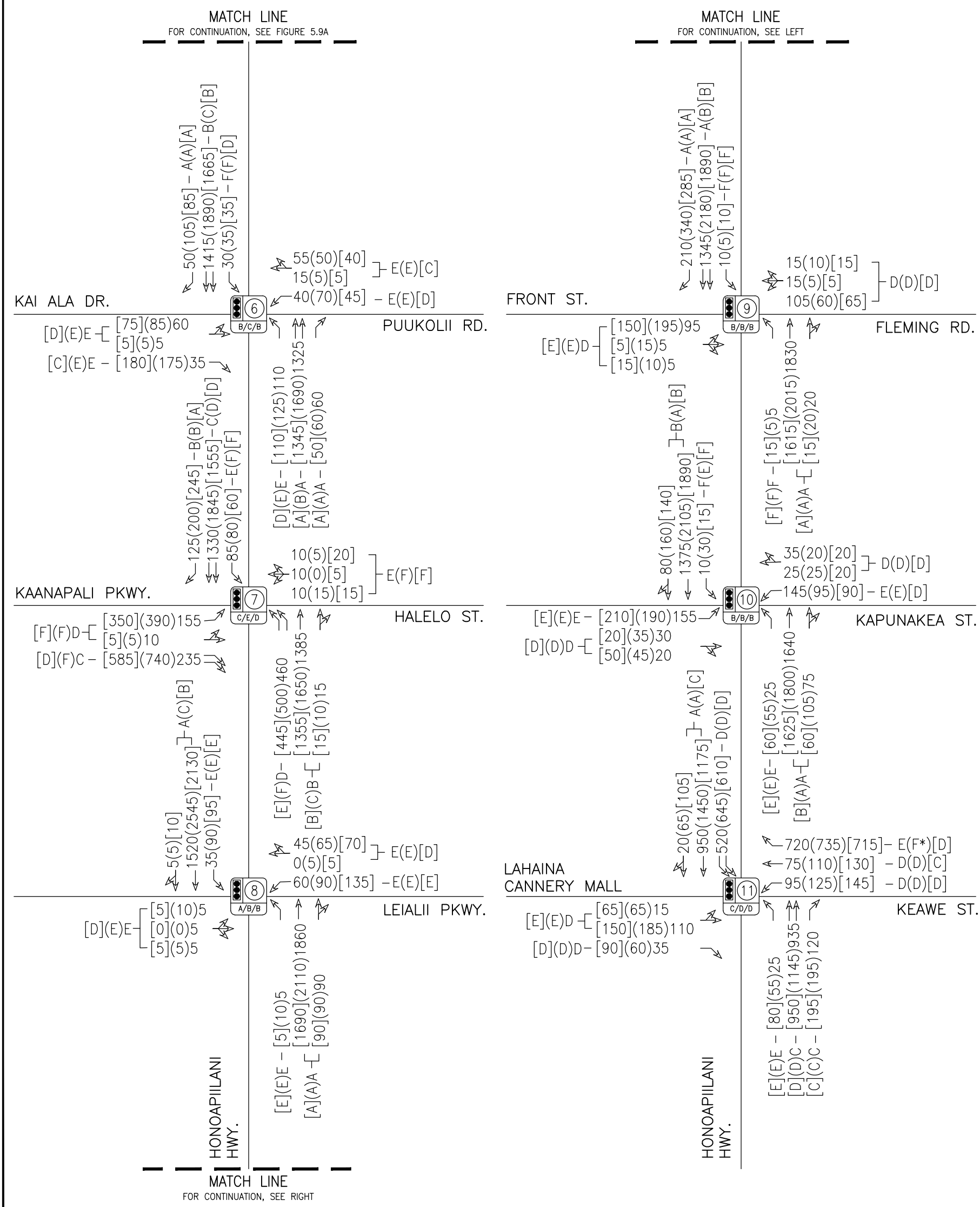

PULELEHUA	AUSTIN, TSUTSUMI & ASSOCIATES, INC. ENGINEERS, SURVEYORS • HONOLULU, HAWAII	FIGURE
	FUTURE YEAR 2027 SCENARIO 4 LANE CONFIGURATION, VOLUMES AND LOS	**5.9B**

Table 5.8: Base Year 2027, Future Year 2022 Scenario 3 and Future Year 2027 Scenario 4 Level of Service Summary

	Base Year 2027									Future Year 2022 Scenario 3									Future Year 2027 Scenario 4								
	AM			PM			WE			AM			PM			WE			AM			PM			WE		
Intersection	HCM Delay	v/c Ratio	LOS	HCM Delay	v/c Ratio	LOS	HCM Delay	v/c Ratio	LOS	HCM Delay	v/c Ratio	LOS	HCM Delay	v/c Ratio	LOS	HCM Delay	v/c Ratio	LOS	HCM Delay	v/c Ratio	LOS	HCM Delay	v/c Ratio	LOS	HCM Delay	v/c Ratio	LOS
1: Honoapiilani Highway & Napilihau Street																											
NB LT	18.9	0.75	B	23.2	0.84	C	22.0	0.79	C	18.9	0.76	B	21.5	0.85	C	21.2	0.81	C	18.8	0.76	B	27.8	0.87	C	24.3	0.83	C
NB TH	8.3	0.35	A	5.7	0.27	A	7.4	0.42	A	8.3	0.35	A	5.7	0.24	A	7.3	0.40	A	8.5	0.39	A	5.7	0.28	A	7.3	0.44	A
NB RT	6.9	0.08	A	4.7	0.05	A	5.4	0.03	A	7.0	0.09	A	4.9	0.05	A	5.4	0.03	A	7.0	0.09	A	4.6	0.05	A	5.2	0.03	A
EB LT/TH	15.0	0.26	B	24.2	0.32	C	20.7	0.32	C	15.5	0.25	B	22.9	0.30	C	20.7	0.31	C	15.5	0.26	B	27.2	0.32	C	23.5	0.32	C
EB RT	14.5	0.15	B	22.8	0.12	C	19.7	0.16	B	15.0	0.17	B	22.0	0.16	C	19.9	0.18	B	15.0	0.15	B	25.9	0.15	C	22.4	0.16	C
WB LT	17.4	0.30	B	27.2	0.32	C	22.7	0.21	C	18.1	0.32	B	25.9	0.33	C	22.9	0.23	C	18.1	0.32	B	30.8	0.36	C	26.0	0.25	C
WB TH/RT	14.7	0.22	B	22.9	0.14	C	20.3	0.29	C	15.2	0.21	B	21.8	0.13	C	20.4	0.29	C	15.2	0.21	B	25.8	0.13	C	23.1	0.29	C
SB LT	66.8	0.72	E	78.4	0.74	E	60.2	0.78	E	68.1	0.72	E	76.9	0.73	E	60.8	0.78	E	68.1	0.72	E	84.4	0.74	F	66.7	0.80	E
SB TH	14.2	0.47	B	18.7	0.66	B	15.5	0.62	B	14.0	0.34	B	19.5	0.64	B	16.9	0.62	B	15.5	0.51	B	21.3	0.70	C	17.9	0.66	B
SB RT	11.2	0.02	B	12.8	0.05	B	10.9	0.06	B	12.1	0.02	B	14.0	0.05	B	12.2	0.06	B	12.1	0.02	B	14.2	0.05	B	12.1	0.06	B
Overall	14.3	-	B	18.1	-	B	15.7	-	B	14.5	-	B	18.0	-	B	16.3	-	B	14.7	-	B	20.6	-	C	17.4	-	B
2: Honoapiilani Highway & Hoohui Road																											
NB LT	10.7	0.39	B	11.1	0.53	B	8.8	0.36	A	10.5	0.43	B	11.8	0.59	B	9.5	0.44	A	11.8	0.47	B	15.1	0.66	B	10.8	0.48	B
NB TH	10.7	0.64	B	9.4	0.68	A	8.9	0.61	A	11.8	0.72	B	9.7	0.69	A	9.1	0.63	A	11.6	0.71	B	10.0	0.71	B	9.4	0.67	A
NB RT	0.0	0.00	A	0.0	0.00	A	0.0	0.00	A	0.0	0.00	A	0.0	0.00	A	0.0	0.00	A	0.0	0.00	A	0.0	0.00	A	0.0	0.00	A
EB LT/TH	19.1	0.18	B	22.7	0.33	C	18.3	0.24	B	18.2	0.18	B	22.8	0.32	C	19.4	0.24	B	20.3	0.18	C	26.5	0.34	C	21.4	0.25	C
EB RT	18.0	0.06	B	20.9	0.06	C	17.4	0.08	B	17.1	0.07	B	21.1	0.06	C	18.6	0.09	B	19.1	0.06	B	24.3	0.05	C	20.4	0.09	C
WB LT	22.0	0.30	C	25.1	0.22	C	19.9	0.15	B	21.0	0.30	C	25.6	0.26	C	21.3	0.20	C	23.5	0.32	C	29.7	0.29	C	23.6	0.21	C
WB TH/RT	18.0	0.07	B	20.9	0.07	C	17.4	0.07	B	17.1	0.07	B	21.1	0.07	C	18.4	0.06	B	19.1	0.07	B	24.4	0.07	C	20.3	0.07	C
SB LT	9.5	0.03	A	8.1	0.07	A	7.7	0.04	A	10.3	0.03	B	8.4	0.07	A	8.1	0.04	A	10.1	0.03	B	8.6	0.08	A	8.1	0.04	A
SB TH	15.7	0.81	B	13.9	0.82	B	12.7	0.77	B	15.8	0.79	B	14.6	0.82	B	13.5	0.79	B	16.5	0.82	B	16.6	0.86	B	14.1	0.82	B
SB RT	9.2	0.04	A	7.6	0.06	A	7.5	0.04	A	9.7	0.05	A	8.0	0.06	A	7.9	0.04	A	9.3	0.04	A	7.6	0.06	A	7.6	0.04	A
Overall	13.8	-	B	12.6	-	B	11.4	-	B	14.0	-	B	13.1	-	B	12.0	-	B	14.6	-	B	14.7	-	B	12.5	-	B
3: Honoapiilani Highway & Akahele Street																											
NB LT	45.7	0.77	D	49.4	0.83	D	40.9	0.76	D	50.5	0.76	D	57.4	0.85	E	56.8	0.77	E	53.0	0.76	D	89.0	0.89	F	63.9	0.78	E
NB TH	10.0	0.63	B	13.8	0.77	B	9.8	0.63	A	17.7	0.77	B	40.0	0.94	D	32.9	0.89	C	25.1	0.85	C	44.1	0.95	D	40.0	0.91	D
NB RT	6.0	0.01	A	5.2	0.01	A	5.8	0.01	A	10.3	0.04	B	13.0	0.12	B	18.7	0.20	B	15.3	0.13	B	14.7	0.15	B	19.1	0.20	B
EB LT	49.7	0.74	D	59.0	0.77	E	49.1	0.74	D	56.6	0.78	E	66.7	0.77	E	66.3	0.77	E	58.9	0.78	E	80.1	0.77	F	72.8	0.77	E
EB TH/RT	27.2	0.07	C	38.8	0.05	D	27.5	0.05	C	30.7	0.13	C	52.1	0.63	D	50.3	0.77	D	33.2	0.13	C	70.4	0.74	E	57.9	0.79	E
WB LT	73.5	0.53	E	109.1	0.78	F	56.1	0.56	E	43.3	0.77	D	59.5	0.82	E	59.2	0.87	E	43.7	0.81	D	72.5	0.85	E	71.8	0.89	E
WB TH	28.7	0.03	C	42.2	0.04	D	28.7	0.03	C	27.4	0.14	C	42.0	0.19	D	32.2	0.21	C	27.6	0.13	C	52.5	0.19	D	37.3	0.21	D
WB RT	28.5	0.01	C	42.1	0.01	D	28.6	0.01	C	26.7	0.03	C	40.6	0.03	D	30.9	0.05	C	27.1	0.06	C	51.0	0.04	D	35.7	0.04	D
SB LT	116.5	0.71	F	134.9	0.72	F	116.1	0.71	F	56.4	0.78	E	60.3	0.80	E	51.8	0.83	D	44.3	0.79	D	95.3	0.87	F	59.1	0.85	E
SB TH	15.8	0.86	B	29.0	0.92	C	16.1	0.85	B	21.4	0.87	C	37.4	0.92	D	27.2	0.84	C	24.0	0.88	C	43.6	0.93	D	33.3	0.88	C
SB RT	7.3	0.02	A	9.9	0.05	A	7.8	0.04	A	10.7	0.02	B	14.5	0.05	B	14.2	0.03	B	11.8	0.02	B	15.2	0.05	B	14.4	0.03	B
Overall	15.9	-	B	25.2	-	C	16.1	-	B	24.3	-	C	42.2	-	D	36.8	-	D	28.9	-	C	51.4	-	D	43.0	-	D
4: Honoapiilani Highway & Lower Honoapiilani Road																											
NB LT	24.4	0.84	C	38.4	0.95	D	23.7	0.88	C	25.7	0.85	C	39.2	0.95	D	28.8	0.89	C	26.9	0.85	C	46.1	0.95	D	31.4	0.90	C
NB TH/RT	4.5	0.33	A	4.3	0.37	A	2.3	0.26	A	4.5	0.35	A	4.7	0.43	A	3.0	0.34	A	4.5	0.35	A	4.7	0.44	A	3.1	0.36	A
EB LT/TH	27.2	0.21	C	48.5	0.42	D	30.0	0.31	C	28.7	0.21	C	50.0	0.51	D	35.0	0.42	D	30.1	0.24	C	55.4	0.53	E	38.1	0.44	D
EB RT	0.0	0.00	A	0.0	0.00	A	0.0	0.00	A	0.0	0.00	A	0.0	0.00	A	0.0	0.00	A	0.0	0.00	A	0.0	0.00	A	0.0	0.00	A
WB LT/TH/RT	26.6	0.11	C	49.4	0.50	D	28.3	0.05	C	28.0	0.11	C	49.4	0.48	D	31.9	0.05	C	29.3	0.12	C	54.6	0.50	D	34.7	0.05	C
SB LT	53.6	0.74	D	95.5	0.73	F	0.0	0.00	A	55.5	0.74	E	96.2	0.73	F	0.0	0.00	A	54.0	0.78	D	102.9	0.73	F	0.0	0.00	A
SB TH	13.3	0.60	B	30.2	0.74	C	15.3	0.61	B	13.6	0.63	B	31.6	0.77	C	18.2	0.67	B	13.9	0.64	B	35.7	0.81	D	19.2	0.70	B
SB RT	9.1	0.00	A	20.6	0.01	C	10.9	0.03	B	9.1	0.01	A	20.8	0.01	C	12.5	0.06	B	9.1	0.01	A	21.8	0.01	C	12.7	0.06	B
Overall	12.5	-	B	24.2	-	C	13.2	-	B	12.7	-	B	24.2	-	C	15.0	-	B	13.1	-	B	27.4	-	C	15.8	-	B
5: Honoapiilani Highway & Kai Malina Parkway/Halawai Drive																											
NB LT	34.6	0.80	C	47.4	0.82	D	38.4	0.78	D	36.3	0.80	D	48.2	0.83	D	41.8	0.79	D	37.7	0.80	D	50.7	0.83	D	44.6	0.79	D
NB TH/RT	3.9	0.45	A	7.2	0.61	A	4.8	0.43	A	4.1	0.47	A	8.3	0.67	A	5.4	0.51	A	4.0	0.47	A	8.5	0.68	A	5.5	0.52	A
EB LT/TH	33.3	0.17	C	40.2	0.23	D	33.2	0.27	C	35.1	0.20	D	40.9	0.25	D	36.3	0.31	D	36.6	0.21	D	43.2	0.26	D	39.0	0.32	D
EB RT	33.1	0.01	C	39.3	0.03	D	32.4	0.04	C	34.7	0.01	C	39.7	0.03	D	35.1	0.04	D	36.1	0.01	D	41.9	0.03	D	37.6	0.04	D
WB LT/TH/RT	33.6	0.11	C	41.5	0.09	D	32.6	0.11	C	35.1	0.12	D	42.2	0.09	D	35.7	0.12	D	36.6	0.12	D	44.6	0.09	D	38.4	0.13	D
SB LT	57.5	0.79	E	77.9	0.78	E	63.9	0.76	E	60.2	0.85	E	79.0	0.79	E	68.5	0.77	E	62.7	0.85	E	82.4	0.79	F	72.3	0.77	E
SB TH	7.9	0.64	A	13.8	0.76	B	9.1	0.66	A	8.2	0.66	A	14.3	0.77	B	9.8	0.70	A	8.3	0.67	A	16.0	0.82	B	10.6	0.73	B
SB RT	4.4	0.04	A	6.4	0.04	A	4.9	0.04	A	4.4	0.05	A	6.5	0.04	A	5.0	0.04	A	4.4	0.05	A	6.5	0.04	A	5.0	0.05	A
Overall	8.2	-	A	12.9	-	B	9.5	-	A	8.6	-	A	13.5	-	B	10.1	-	B	8.7	-	A	14.5	-	B	10.6	-	B

Table 5.8: Base Year 2027, Future Year 2022 Scenario 3 and Future Year 2027 Scenario 4 Level of Service Summary Cont'd

	Base Year 2027									Future Year 2022 Scenario 3									Future Year 2027 Scenario 4								
	AM			PM			WE			AM			PM			WE			AM			PM			WE		
Intersection	HCM Delay	v/c Ratio	LOS	HCM Delay	v/c Ratio	LOS	HCM Delay	v/c Ratio	LOS	HCM Delay	v/c Ratio	LOS	HCM Delay	v/c Ratio	LOS	HCM Delay	v/c Ratio	LOS	HCM Delay	v/c Ratio	LOS	HCM Delay	v/c Ratio	LOS	HCM Delay	v/c Ratio	LOS
6: Honoapiilani Highway & Kai Ala Drive/Puukolii Road																											
NB LT	74.2	0.85	E	77.9	0.86	E	41.8	0.78	D	74.1	0.85	E	77.6	0.86	E	43.2	0.79	D	74.2	0.85	E	77.5	0.86	E	44.5	0.79	D
NB TH	6.4	0.50	A	10.3	0.62	B	8.3	0.52	A	6.8	0.51	A	11.7	0.67	B	9.0	0.59	A	6.9	0.52	A	12.2	0.70	B	9.3	0.62	A
NB RT	3.8	0.04	A	5.3	0.04	A	5.3	0.03	A	4.0	0.04	A	5.6	0.04	A	5.3	0.03	A	4.0	0.04	A	5.6	0.04	A	5.2	0.03	A
EB LT/TH	68.7	0.38	E	67.2	0.37	E	33.3	0.24	C	68.5	0.40	E	67.0	0.40	E	35.4	0.30	D	68.5	0.40	E	67.0	0.40	E	36.8	0.31	D
EB RT	63.3	0.01	E	63.7	0.13	E	32.0	0.05	C	62.8	0.01	E	63.6	0.20	E	33.3	0.05	C	62.8	0.01	E	63.6	0.20	E	34.6	0.05	C
WB LT	75.0	0.39	E	78.4	0.54	E	36.9	0.23	D	75.0	0.39	E	79.2	0.55	E	39.6	0.25	D	75.0	0.39	E	79.2	0.55	E	41.2	0.26	D
WB TH/RT	64.1	0.10	E	62.5	0.03	E	31.8	0.03	C	63.6	0.09	E	61.6	0.03	E	33.2	0.03	C	63.6	0.09	E	61.6	0.03	E	34.5	0.03	C
SB LT	82.9	0.69	F	89.0	0.78	F	44.6	0.59	D	84.8	0.76	F	89.0	0.78	F	46.3	0.63	D	84.8	0.76	F	89.0	0.78	F	47.7	0.63	D
SB TH	10.6	0.56	B	20.1	0.79	C	14.4	0.76	B	11.2	0.58	B	21.1	0.80	C	15.4	0.79	B	11.6	0.60	B	23.8	0.85	C	16.9	0.83	B
SB RT	6.0	0.03	A	8.5	0.07	A	7.2	0.05	A	6.1	0.03	A	9.0	0.08	A	7.2	0.06	A	6.1	0.03	A	9.0	0.09	A	7.1	0.06	A
Overall	14.0	-	B	20.8	-	C	14.1	-	B	14.5	-	B	21.8	-	C	14.9	-	B	14.6	-	B	23.1	-	C	15.7	-	B
7: Honoapiilani Highway & Kaanapali Parkway/Halelo Street																											
NB LT	46.2	0.79	D	108.4	0.90	F	66.5	0.83	E	46.4	0.77	D	99.6	0.86	F	61.7	0.75	E	49.9	0.80	D	128.9	0.92	F	79.1	0.85	E
NB TH/RT	15.7	0.66	B	21.7	0.65	C	16.1	0.55	B	16.2	0.68	B	25.0	0.72	C	15.6	0.63	B	16.2	0.67	B	22.8	0.69	C	17.7	0.61	B
EB LT/TH	51.0	0.49	D	111.1	0.79	F	64.5	0.61	E	50.4	0.49	D	97.5	0.69	F	60.0	0.67	E	54.7	0.53	D	136.4	0.91	F	80.7	0.74	F
EB RT	32.1	0.08	C	74.3	0.63	E	44.3	0.44	D	32.6	0.08	C	70.6	0.52	E	44.7	0.35	D	34.4	0.08	C	85.9	0.70	F	53.5	0.45	D
WB LT/TH/RT	51.5	0.19	D	116.3	0.25	F	77.5	0.40	E	50.9	0.19	D	108.9	0.24	F	67.8	0.36	E	55.5	0.19	E	132.4	0.40	F	92.4	0.45	F
SB LT	53.2	0.60	D	139.3	0.76	F	76.4	0.58	E	52.5	0.61	D	130.1	0.76	F	66.8	0.57	E	57.2	0.63	E	129.1	0.77	F	90.8	0.64	F
SB TH	24.0	0.77	C	54.5	0.93	D	31.7	0.81	C	23.1	0.77	C	46.7	0.91	D	23.5	0.79	C	25.0	0.78	C	54.1	0.93	D	36.1	0.84	D
SB RT	10.3	0.10	B	11.3	0.16	B	9.2	0.18	A	9.7	0.09	A	8.3	0.11	A	6.6	0.14	A	10.3	0.10	B	10.3	0.16	B	9.4	0.20	A
Overall	25.5	-	C	56.2	-	E	34.5	-	C	25.1	-	C	49.8	-	D	27.9	-	C	26.8	-	C	61.1	-	E	39.7	-	D
8: Honoapiilani Highway & Leialii Parkway																											
NB LT	75.4	0.45	E	72.5	0.62	E	71.7	0.44	E	75.5	0.45	E	73.7	0.50	E	71.7	0.44	E	75.2	0.45	E	73.0	0.50	E	70.9	0.44	E
NB TH/RT	9.3	0.73	A	2.8	0.82	A	3.5	0.68	A	9.2	0.72	A	2.8	0.80	A	3.6	0.68	A	9.5	0.74	A	3.3	0.86	A	4.3	0.75	A
EB LT/TH/RT	58.6	0.06	E	57.0	0.07	E	50.0	0.03	D	58.6	0.06	E	61.5	0.07	E	50.0	0.03	D	58.6	0.06	E	61.5	0.07	E	50.0	0.03	D
WB LT	62.0	0.37	E	62.5	0.54	E	58.1	0.63	E	62.0	0.37	E	67.4	0.56	E	58.1	0.63	E	62.0	0.37	E	67.4	0.56	E	58.1	0.63	E
WB TH/RT	58.6	0.01	E	56.7	0.05	E	50.3	0.05	D	58.6	0.01	E	61.0	0.05	E	50.3	0.05	D	58.6	0.01	E	61.0	0.05	E	50.3	0.05	D
SB LT	68.8	0.52	E	66.2	0.78	E	76.2	0.79	E	68.8	0.52	E	74.5	0.80	E	78.6	0.80	E	69.9	0.60	E	74.5	0.80	E	78.6	0.80	E
SB TH/RT	5.6	0.54	A	19.1	0.91	B	12.8	0.78	B	5.7	0.55	A	15.1	0.86	B	11.8	0.76	B	5.8	0.56	A	22.4	0.93	C	14.8	0.83	B
Overall	9.4	-	A	13.9	-	B	12.2	-	B	9.4	-	A	12.1	-	B	11.9	-	B	9.7	-	A	15.9	-	B	13.4	-	B
9: Honoapiilani Highway & Front Street/Flemming Road																											
NB LT	88.0	0.73	F	93.8	0.74	F	85.3	0.84	F	88.5	0.73	F	98.7	0.75	F	85.3	0.84	F	89.2	0.73	F	95.6	0.75	F	82.7	0.84	F
NB TH/RT	8.0	0.70	A	2.5	0.77	A	7.5	0.58	A	7.9	0.69	A	2.7	0.77	A	8.0	0.58	A	8.3	0.71	A	3.4	0.83	A	8.9	0.64	A
EB LT/TH/RT	52.6	0.48	D	59.5	0.72	E	57.7	0.66	E	53.1	0.50	D	65.4	0.75	E	57.6	0.68	E	53.1	0.50	D	65.6	0.76	E	57.6	0.68	E
WB LT/TH/RT	54.3	0.61	D	49.7	0.24	D	52.3	0.32	D	54.4	0.61	D	52.0	0.23	D	50.8	0.30	D	54.4	0.61	D	51.6	0.22	D	50.8	0.30	D
SB LT	87.5	0.81	F	79.4	0.74	E	84.1	0.82	F	87.3	0.81	F	90.8	0.75	F	85.5	0.82	F	87.1	0.81	F	83.0	0.75	F	81.7	0.82	F
SB TH	5.2	0.51	A	13.8	0.87	B	8.8	0.72	A	5.2	0.52	A	13.9	0.83	B	9.2	0.70	A	5.2	0.52	A	16.7	0.91	B	10.4	0.77	B
SB RT	3.2	0.12	A	5.6	0.24	A	4.3	0.18	A	3.2	0.13	A	6.3	0.25	A	4.8	0.19	A	3.2	0.13	A	6.4	0.25	A	4.8	0.20	A
Overall	10.1	-	B	11.2	-	B	11.4	-	B	10.0	-	B	11.9	-	B	12.1	-	B	10.2	-	B	13.4	-	B	12.7	-	B
10: Honoapiilani Highway & Kapunakea Street**																											
NB LT	74.0	0.79	E	72.5	0.79	E	71.1	0.78	E	73.5	0.79	E	79.4	0.82	E	70.6	0.78	E	73.9	0.79	E	74.8	0.82	E	68.5	0.78	E
NB TH/RT	1.4	0.69	A	1.2	0.76	A	12.2	0.66	B	1.3	0.69	A	1.0	0.76	A	13.1	0.66	B	1.4	0.69	A	0.7	0.80	A	13.5	0.72	B
EB LT	-	-	-	-	-	-	-	-	-	-	-	-	-	-	-	-	-	-	61.5	0.66	E	71.3	0.76	E	57.2	0.73	E
EB LT/TH	64.2	0.72	E	70.5	0.80	E	59.7	0.74	E	64.5	0.72	E	71.2	0.79	E	58.1	0.75	E	-	-	-	-	-	-	-	-	-
EB TH/RT	-	-	-	-	-	-	-	-	-	-	-	-	-	-	-	-	-	-	49.9	0.12	D	50.6	0.16	D	42.4	0.08	D
EB RT	48.3	0.01	D	45.1	0.02	D	42.6	0.04	D	47.9	0.01	D	46.7	0.03	D	40.8	0.04	D	-	-	-	-	-	-	-	-	-
WB LT	55.1	0.51	E	48.5	0.31	D	45.3	0.26	D	54.6	0.50	D	50.1	0.29	D	43.3	0.24	D	60.5	0.63	E	57.3	0.41	E	46.9	0.31	D
WB TH/RT	49.3	0.10	D	45.7	0.09	D	42.9	0.07	D	48.9	0.10	D	47.3	0.08	D	41.2	0.07	D	49.8	0.10	D	49.8	0.09	D	42.3	0.07	D
SB LT	101.0	0.83	F	72.5	0.80	E	82.3	0.84	F	100.9	0.83	F	74.0	0.79	E	83.7	0.84	F	100.7	0.83	F	72.2	0.79	E	80.7	0.84	F
SB TH/RT	10.9	0.59	B	13.4	0.96	B	5.4	0.87	A	11.2	0.60	B	6.5	0.92	A	10.8	0.85	B	10.8	0.60	B	8.6	0.97	A	12.9	0.92	B
Overall	11.9	-	B	14.3	-	B	13.8	-	B	12.0	-	B	10.8	-	B	17.2	-	B	11.8	-	B	11.8	-	B	18.1	-	B

Table 5.8: Base Year 2027, Future Year 2022 Scenario 3 and Future Year 2027 Scenario 4 Level of Service Summary Cont'd

	Base Year 2027									Future Year 2022 Scenario 3									Future Year 2027 Scenario 4								
	AM			PM			WE			AM			PM			WE			AM			PM			WE		
Intersection	HCM Delay	v/c Ratio	LOS	HCM Delay	v/c Ratio	LOS	HCM Delay	v/c Ratio	LOS	HCM Delay	v/c Ratio	LOS	HCM Delay	v/c Ratio	LOS	HCM Delay	v/c Ratio	LOS	HCM Delay	v/c Ratio	LOS	HCM Delay	v/c Ratio	LOS	HCM Delay	v/c Ratio	LOS
11: Honoapiilani Highway & Keawe Street																											
NB LT	79.8	0.79	E	69.3	0.78	E	64.0	0.79	E	79.8	0.79	E	79.7	0.78	E	64.0	0.79	E	79.8	0.79	E	74.4	0.78	E	64.0	0.79	E
NB TH	33.6	0.66	C	42.7	0.85	D	33.9	0.68	C	36.9	0.69	D	50.8	0.87	D	34.4	0.63	C	34.4	0.68	C	51.7	0.91	D	38.1	0.76	D
NB RT	23.8	0.08	C	27.6	0.21	C	25.7	0.20	C	26.2	0.08	C	33.6	0.23	C	27.6	0.21	C	24.1	0.08	C	30.7	0.23	C	27.4	0.21	C
EB LT/TH	47.3	0.34	D	71.3	0.84	E	61.6	0.77	E	44.9	0.32	D	54.1	0.69	D	62.8	0.78	E	47.0	0.34	D	57.8	0.69	E	62.8	0.78	E
EB RT	43.5	0.01	D	44.2	0.02	D	44.4	0.04	D	41.4	0.01	D	40.8	0.03	D	43.5	0.04	D	43.2	0.01	D	44.6	0.02	D	43.4	0.04	D
WB LT	38.1	0.29	D	44.9	0.63	D	42.2	0.62	D	36.1	0.27	D	40.5	0.54	D	41.9	0.63	D	37.8	0.29	D	38.0	0.38	D	41.9	0.63	D
WB TH	35.3	0.14	D	35.2	0.21	D	34.6	0.25	C	33.4	0.14	C	33.6	0.19	C	33.8	0.24	C	35.0	0.14	D	35.6	0.20	D	33.7	0.24	C
WB RT	76.2	0.95	E	79.9	0.97	E	43.7	0.70	D	67.3	0.93	E	70.9	0.94	E	51.1	0.82	D	66.0	0.92	E	105.9	1.06	F*	52.0	0.83	D
SB LT	51.1	0.91	D	41.6	0.94	D	57.1	0.89	E	51.0	0.92	D	46.5	0.95	D	57.3	0.89	E	51.4	0.91	D	51.4	0.98	D	52.0	0.90	D
SB TH/RT	1.1	0.49	A	0.8	0.79	A	33.3	0.69	C	1.2	0.49	A	1.4	0.76	A	32.2	0.63	C	1.3	0.50	A	1.2	0.83	A	24.0	0.72	C
Overall	33.3	-	C	33.2	-	C	40.4	-	D	33.4	-	C	35.7	-	D	41.8	-	D	32.0	-	C	39.8	-	D	38.6	-	D
12: RIRO Access & Honoapiilani Highway																											
WB RT										14.9	0.04	B	20.1	0.19	C	16.2	0.24	C	15.4	0.05	C	22.4	0.21	C	17.8	0.27	C
Overall										0.1	-	-	0.5	-	-	0.9	-	-	0.1	-	-	0.5	-	-	0.9	-	-
13: Honoapiilani Highway & Road J																											
WB LT										32.1	0.35	D	53.7	0.46	F	40.7	0.40	E	34.3	0.37	D	65.2	0.52	F	48.7	0.45	E
WB RT										15.9	0.10	C	24.2	0.15	C	18.1	0.12	C	16.2	0.11	C	25.7	0.16	D	19.5	0.13	C
SB LT										9.7	0.01	A	12.5	0.09	B	10.8	0.07	B	9.7	0.01	A	12.8	0.10	B	11.1	0.07	B
Overall										1.5	-	-	1.9	-	-	1.7	-	-	1.5	-	-	2.0	-	-	1.8	-	-
14: Road A & Akahele Street																											
NB LT/TH/RT										12.1	0.10	B	17.0	0.25	C	46.3	0.63	E	17.6	0.43	C	20.7	0.40	C	46.3	0.63	E
EB LT										7.6	0.04	A	7.6	0.09	A	7.8	0.14	A	7.5	0.03	A	7.6	0.09	A	7.8	0.14	A
WB LT										7.4	0.00	A	7.6	0.00	A	7.7	0.00	A	7.8	0.00	A	7.7	0.00	A	7.7	0.00	A
SB LT/TH/RT										9.7	0.10	A	11.5	0.22	B	10.6	0.24	B	9.8	0.10	A	11.5	0.22	B	10.6	0.24	B
Overall										4.7	-	-	6.8	-	-	11.1	-	-	6.8	-	-	7.8	-	-	11.1	-	-
15: Road C & Akahele Street																											
NB LT/TH/RT										9.8	0.12	A	10.2	0.09	B	10.1	0.09	B	9.7	0.10	A	10.1	0.08	B	10.1	0.09	B
EB LT/TH/RT										7.3	0.01	A	7.3	0.02	A	7.3	0.02	A	7.3	0.01	A	7.3	0.02	A	7.3	0.02	A
WB LT/TH/RT										7.3	0.00	A	7.5	0.00	A	7.4	0.00	A	7.3	0.00	A	7.5	0.00	A	7.4	0.00	A
SB LT/TH/RT										8.8	0.04	A	9.1	0.04	A	9.1	0.04	A	8.8	0.04	A	9.2	0.03	A	9.1	0.04	A
Overall										6.5	-	-	4.5	-	-	4.8	-	-	6.5	-	-	4.2	-	-	4.8	-	-
16: Road G & Road J																											
NB LT/RT										8.5	0.03	A	9.6	0.05	A	9.6	0.06	A	8.5	0.03	A	9.6	0.05	A	9.6	0.06	A
WB LT/TH										7.3	0.00	A	7.5	0.00	A	7.5	0.00	A	7.3	0.00	A	7.5	0.00	A	7.5	0.00	A
Overall										2.1	-	-	1.9	-	-	2.1	-	-	2.1	-	-	1.9	-	-	2.1	-	-
17: Road F & Road J																											
NB LT/RT										3.6	0.04	A	3.6	0.03	A	3.7	0.03	A	3.6	0.04	A	3.6	0.03	A	3.4	0.02	A
EB TH/RT										3.4	0.02	A	4.0	0.09	A	3.8	0.07	A	3.4	0.02	A	4.0	0.09	A	3.5	0.03	A
WB LT/TH										3.8	0.05	A	3.6	0.03	A	3.6	0.04	A	3.8	0.05	A	3.6	0.03	A	3.4	0.02	A
Overall										3.6	-	A	3.9	-	A	3.7	-	A	3.6	-	A	3.9	-	A	3.5	-	A

* Denotes overcapacity condition, v/c ≥ 1.

** For Future Year 2027 Scenario 4, the analysis for Honoapiilani Highway/Kapunakea Street includes restriping the eastbound approach to provide an exclusive left-turn lane and a shared through/right-turn lane.

6. CONCLUSIONS

The Project is located upon approximately 304.255 acres of undeveloped land in Lahaina, bounded by Honoapiilani Highway to the west and the Kapalua Airport to the east. The Project proposes to provide 898 multi-family (MF) residential units, 2 single-family residential lots (for future residential development), an elementary school, a 10-acre park and two (2) retail centers, totaling 70,000 square feet (SF). In addition, a trail will be constructed just east and parallel to Honoapiilani Highway that will provide bike and pedestrian access to link the Project's development north and south of Mahinahina Gulch. The Project will be constructed in six (6) phases, but for purposes of this TIAR, will be analyzed as four (4) scenarios.

Although it is not part of this TIAR, the Project envisions future expansion at the north end of the Project site (currently identified as 2 single-family residential lots) with an additional 302 residential units, bringing the total residential unit count to 1,200 residential units. Future traffic analysis and roadway mitigation measures will be assessed at a later date.

Scenario 1 – Develop Phase 1 with a build-out of early 2022 that includes the following:

- 240 MF residential units north of Akahele Street, with direct access provided by two (2) new Project roadways, Road A and Road C, bisecting Akahele Street.

Scenario 2 - Develop Phase 2 with a build-out of early 2022 that includes the following:

- 240 MF residential units south of Akahele Street with direct access provided by Road A and Road C.
- Retail Area North consisting of 50,000 square feet (SF) of space located on the northeast corner of the Honoapiilani Highway/Akahele Street intersection.
- Retail Area South consisting of 20,000 SF of space located adjacent to Retail Area North on the southeast corner of the Honoapiilani Highway/Akahele Street intersection.
    - Access to Retail Area North and South will be provided by Road A. Retail Area North will also be serviced by a RIRO access via Honoapiilani Highway.
    - Based on the developer forecast absorption for the Retail Area North and South component, approximately 15,000 SF of retail space will be occupied by Year 2022, with subsequent occupancy occurring at a pace of 5,000 SF of retail space every 2 years thereafter. Therefore, full build-out and occupancy of Retail Areas North and South will likely occur well beyond Year 2022, but was assumed to be fully built out by Year 2022 for this TIAR.

Scenario 3 – Develop Phases 3-5 with a build-out of late 2022 that include the following:

- 100 MF residential units (Phase 3) south of Akahele Street, with access provided by Road C.
- 318 MF residential units (Phase 3 and Phase 4) south of Mahinahina Gulch, with access provided by a new Project roadway, Road J, intersecting Honoapiilani Highway south of Mahinahina Gulch.
- 2 single-family residential lots north of Akahele Street, with access provided by Road A and Road C.
- 10-acre park south of Mahinahina Gulch, with access provided by Road J.

Scenario 4 – A future elementary school, to be planned/developed by the Department of Education (DOE). Since the development of the school is not in the direct controller of the Pulelehua development, the timeframe for this school has yet to be determined. For purposes of this TIAR, a forecast build-out of 2027 was assumed for the TIAR.

- Assumed 750-student elementary school, with access provided by Road A.

6.1 Existing Conditions

In the vicinity of the Project, Honoapiilani Highway services the area as the main thoroughfare that connects the West Maui region. Honoapiilani Highway generally operates as a two (2) lane highway from Napilihau Street to Lower Honoapiilani Road and continues south as a four (4) lane highway from Lower Honoapiilani Road to beyond Keawe Street. In the vicinity of the Project, the intersections along the highway operate with either fixed coordinated signal timing plans or uncoordinated plans with lengthy through volume green times. As a result, numerous mainline left-turn movements and minor street approaches at various study intersections operate at LOS E/F conditions due to lengthy delays from the signal timing plans that favor the through movements along Honoapiilani Highway. Numerous movements also operate with low left-turning volumes (< 25 vehicles), which contribute to the LOS E/F conditions.

However, with the exception of the southbound left-turn movement at the Honoapiilani Highway/Keawe Street intersection, all vehicular movements at each study intersection operate adequately with under-capacity conditions.

6.2 Base Year 2022

It is anticipated that by Year 2022, traffic will have increased over existing conditions due to various anticipated new developments in the Lahaina region shown in Figure 4.1 and a 0.5% ambient growth rate, adjusted and applied from HDOT's MRTDM. By Base Year 2022 without the Project, traffic at the study intersections along Honoapiilani Highway is estimated to increase overall by approximately 10-20% on various parts of the corridor during the AM, PM and WE peak hours of traffic.

By Year 2022, it is assumed that various planned roadway improvements will be implemented even without the Project and include the Lahaina Bypass Road Phase 1B-2, an additional southbound left-turn lane for the Honoapiilani Highway/Keawe Street/Lahaina Cannery Mall intersection, resulting in dual southbound left-turn lanes and various widening/restriping improvements at the Honoapiilani Highway/Napilihau Street intersection.

With the anticipated growth in traffic and planned roadway improvements, all study intersections are forecast to operate similar to existing conditions. Overall intersection delays generally increased by only 1-5 seconds at most study intersections. The majority of intersection movements currently operating at LOS E/F conditions will continue to operate similarly in Base Year 2022 and at under-capacity conditions, with the exception of the eastbound shared left-turn/through movement at Honoapiilani Highway/Kaanapali Parkway intersection during the PM peak hour of traffic, which is forecast to operate at LOS F and over-capacity conditions.

6.3 Base Year 2022 With Mitigation

The following mitigations were proposed for Base Year 2022.

[7] Honoapiilani Highway/Kaanapali Parkway/Halelo Street

- Modify the eastbound approach to incorporate a dedicated left-turn lane, a shared left-turn/through lane and two (2) dedicated right-turn lanes.

With the recommended mitigation, the intersection is anticipated to improve and operate adequately at overall LOS D or better during all peak hours of traffic. Similar to existing conditions, numerous minor street approaches and major street left-turn movements will continue operating at LOS E/F due to the long through movement green time and cycle length.

[8-11] Honoapiilani Highway from Leialii Parkway to Keawe Street

Since the Honoapiilani Highway/Keawe Street intersection will be widened to provide dual southbound left-turn lanes, it was assumed that some of the signal timing plans for intersections along the coordinated corridor from Leialii Parkway to Keawe Street would be reoptimized to make signals run more efficient and improve throughput progression.

6.4 Base Year 2027

It is anticipated that by Year 2027, traffic will have increased over Base Year 2022 due to various new developments in the region shown in Figure 4.1 and a 0.5% ambient growth rate, adjusted and applied from HDOT's MRTDM. By Base Year 2027 without the Project, traffic at the study intersections along Honoapiilani Highway is estimated to generally increase by an additional 5-10% for most parts along the corridor during the AM, PM and WE peak hours of traffic over Base Year 2022 conditions.

With the anticipated growth in traffic, the majority of study intersections are forecast to operate similar to existing conditions. Overall intersection delays generally increased by only 1-5 seconds at most study intersections. The majority of intersection movements operating at LOS E/F conditions during Base Year 2022 will continue to operate similarly in Base Year 2027.

Select movements at Honoapiilani Highway/Akahele Street and Honoapiilani Highway/Kaanapali Parkway/Halelo Street are expected to experience significant increases in delay. However, no mitigation is proposed for either intersection as all major through movements will continue to operate adequately.

6.5 Future Year 2022 Scenario 1

By completion of Scenario 1 in Future Year 2022, the Project is projected to generate a total of 89(125)[106] new external trips during the AM(PM)[WE] peak hours of traffic. Trips generated by the Project are expected to result in growth along major roadways in the study area. All generated traffic will access the site via Honoapiilani Highway at its intersections with Akahele Street.

Due to the relatively minimal traffic increases due to Scenario 1, regional traffic at the study intersections (those not providing direct access to the Project) along Honoapiilani Highway is estimated to increase overall by less than 5%, while local traffic at the study intersections (those providing direct access to the Project) along Honoapiilani Highway is estimated to increase

overall by less than 10% from Base Year 2022 without the Project scenario, during the AM, PM and WE peak hours of traffic.

All study intersections are forecast to operate similar to Base Year 2022 because of the minimal traffic generated by Scenario 1. Based on the AASHTO Green Book, all existing left-turn storage lane lengths at the Honoapiilani Highway/Akahele Street intersection are adequate for the additional traffic generated by Scenario 1.

6.6 Future Year 2022 Scenario 2

By completion of Scenario 2 in Future Year 2022, the Project is projected to generate a total of 210(332)[666] new external trips during the AM(PM)[WE] peak hours of traffic. Trips generated by the Project are expected to result in growth along major roadways in the study area. Traffic will access the site via Honoapiilani Highway at its intersections with Akahele Street and the Project's proposed RIRO driveway for Retail Area North.

By Future Year 2022 WITH the cumulative increases of Project Scenarios 1 and 2, regional traffic at the study intersections (those not providing direct access to the Project) along Honoapiilani Highway is estimated to increase overall by approximately 5-15%, while local traffic at the study intersections (those providing direct access to the Project) along Honoapiilani Highway is estimated to increase overall by approximately 10-40% from Base Year 2022 without the Project scenario, during the AM, PM and WE peak hours of traffic.

All study intersections are forecast to operate similar to Future Year 2022 Scenario 1 with the exception of the Honoapiilani Highway/Akahele Street intersection. Since this intersection is the primary access from Honoapiilani Highway into the Project's Scenario 2 site, turning movements into and out of Akahele Street will increase. As a result, the intersection will worsen, but operate adequately from an overall LOS B(C)[B] during the Future Year 2022 Scenario 1 condition to an overall LOS C(D)[C] for the Future Year 2022 Scenario 2. Various left-turn movements will operate at LOS E conditions during all peak hours, due to the long cycle length and increased turning movements at the intersection. However, all movements will continue to operate under capacity. Based on the AASHTO Green Book, various storage lengths are recommended at the intersection as shown in Table 5.5.

The new RIRO access along Honoapiilani Highway was analyzed as a stop-controlled intersection with stop control on the westbound right-turn movement out of Retail Area North. The westbound right-turn movement is expected to operate adequately with LOS C or better during all peak hours. It is recommended that a northbound right-turn deceleration lane be provided for entry into Retail Area North.

With the addition of the Project's bisecting Road A and Road C, forecast traffic indicates that throughput traffic along Akahele Street will continue to operate with low through volumes (under 25 vehicles) at the Road C intersection and slightly higher through volumes, between 50-150 vehicles, at the Road A intersection during all peak hours. The 50-150 vehicles traveling through the Road A intersection will still yield lengthy gaps in throughput traffic along Akahele Street, eliminating long queues for left-turn movements turning off from Akahele Street onto Road A. However, exclusive left-turn storage lanes should be considered to remove left-turns from the through lanes and increase left-turning vehicle sight distance with the proposed median on Akahele Street.

During the WE peak hour, the northbound shared left-turn/through/right-turn lane on Road A is expected to operate at LOS E due to the high left-turn volumes and the high volumes on Akahele Street. However, lengthy gaps are still expected along Akahele Street as a result of the nearby Honoapiilani Highway/Akahele Street signal.

6.7 Future Year 2022 Scenario 3

By completion of Scenario 3 in Future Year 2022, the Project is projected to generate an additional 168(255)[257] new external trips during the AM(PM)[WE] peak hours of traffic. Trips generated by the Project are expected to result in growth along major roadways in the study area. Traffic generated by Project Scenario 3 will access the site via the Honoapiilani Highway/Road J intersection.

By Future Year 2022 WITH the cumulative increases of Project Scenarios 1, 2 and 3, regional traffic at the study intersections (those not providing direct access to the Project) along Honoapiilani Highway is estimated to increase overall by approximately 5-20%, while local traffic at the study intersections (those providing direct access to the Project) along Honoapiilani Highway is estimated to increase overall by approximately 10-50% from Base Year 2022 without the Project scenario, during the AM, PM and WE peak hours of traffic.

All study intersections are forecast to operate similar to Future Year 2022 Scenario 2, with no major changes to LOS or capacity with the exception of the Honoapiilani Highway/Akahele Street intersection. Due to the continued development of areas north of Mahinahina Gulch, turning movements into and out of Akahele Street will increase. As a result, the intersection will worsen, but operate adequately from an overall LOS C(D)[C] during the Future Year 2022 Scenario 2 condition to an overall LOS C(D)[D] for the Future Year 2022 Scenario 3. The majority of left-turn movements will operate at LOS E conditions during all peak hours, however, all movements will continue to operate under capacity. All left-turn storage lane lengths recommended in for Future Year 2022 Scenario 2 accounts for traffic generated for the Future Year 2022 Scenario 3.

The new Honoapiilani Highway/Road J intersection was analyzed as an unsignalized intersection, which includes an exclusive westbound left-turn and westbound right-turn lane, an exclusive southbound left-turn lane and an exclusive northbound right-turn lane. A southbound median refuge lane along Honoapiilani Highway is also recommended, to facilitate westbound vehicles making the left-turn movement from the Full Access onto Honoapiilani Highway. Based on the Manual on Uniform Traffic Control Devices (MUTCD), Federal Highway Administration, dated 2009, Four-Hour Vehicular Volume traffic signal warrant, a traffic signal is not forecast to be warranted. Signal warrant figures are shown in Appendix D. Based on the AASHTO Green Book, various storage lengths are recommended at the intersection.

With the proposed configuration, the westbound left-turn out of the Project is expected to operate at LOS F during the PM peak hour of traffic and LOS E during the WE peak hour of traffic. However, gaps in through traffic along Honoapiilani Highway and the median refuge lane will help facilitate westbound left-turn movements.

6.8 Future Year 2027 Scenario 4

As discussed earlier, a future elementary school will be planned/developed by the Department of Education (DOE). Since the development of the school is not in the direct controller of the Pulelehua development, the timeframe for this school has yet to be determined. For purposes

of this TIAR, a forecast build-out of 2027 with inclusion of the elementary school as part of the Project was assumed as Scenario 4 for the TIAR.

By completion of Scenario 4 in Future Year 2027, the Project is projected to generate an additional 312(101)[0] new external trips during the AM(PM)[WE] peak hours of traffic. Elementary school students in Lahaina are currently serviced primarily by Princess Nahienaena Elementary School and King Kamehameha III Elementary School, further south of Keawe Street. It's anticipated that upon opening of the new Elementary School in the Project site, many students will transfer to this site from the Kaanapali, Honokowai, Kahana, Napili and Kapalua regions. Trips generated by the new elementary school were rerouted from existing traffic along Honoapiilani Highway to the new site. As a result, the majority of traffic increases were turning movement traffic turning into and out of Akahele Street on the east leg of its intersection with Honoapiilani Highway. Traffic reductions to various through movements along the highway were a result of the reroute.

With the additional trips generated by Scenario 4 and background traffic growth, several study intersections are forecast to operate with increased delay from Base Year 2027 without the Project and Future Year 2022 with Scenarios 1, 2 and 3. All intersection movements forecast to operate at LOS E/F for Future Year 2022 Scenario 3 conditions will continue to operate at LOS E/F conditions during Future Year 2027 Scenario 4

However, the majority of movements expected to experience an increase in delay are minor or left-turn movements that will operate at LOS E/F due to long through movement green times and cycle lengths. The southbound shared through/right-turn at Honoapiilani Highway/Kapunakea Street and the westbound right-turn at Honoapiilani Highway/Keawe Street are expected to operate at over-capacity conditions by Future Year 2027 Scenario 4.

The Lahaina Bypass Road Phase 1C is expected to alleviate some through traffic in the Lahaina area and reduce turning movement volumes at Honoapiilani Highway/Keawe Street by providing an additional connection between the bypass road and the highway. Because there is currently no set completion date for Phase 1C, the bypass extension is not included as a mitigative measure. However, the extension is expected to improve operations at both the Honoapiilani Highway/Kapunakea Street and Honoapiilani Highway/Keawe Street intersections when completed. Additional mitigation is proposed for Honoapiilani Highway/Kapunakea Street.

7. RECOMMENDATIONS

Full Base Year and Future Year 2022 and 2027 roadway improvements are listed in Appendix D and discussed in more detail below.

7.1 Planned Roadway Improvements

The following roadway improvements are planned to be constructed by other entities by Year 2022.

Lahaina Bypass Road Phase 1B-2

- Phase 1B-2 will extend LBR from Hokiokio Place to its southern terminus with Honoapiilani Highway and is expected to be completed in January 2018.

Honoapiilani Highway/Keawe Street/Lahaina Cannery Mall

- An additional southbound left-turn lane is planned for the Honoapiilani Highway/Keawe Street/Lahaina Cannery Mall intersection, resulting in dual southbound left-turn lanes.
- Since the Honoapiilani Highway/Keawe Street intersection will be widened to provide dual southbound left-turn lanes, it was assumed that some of the signal timing plans for intersections along the coordinated corridor from Leialii Parkway to Keawe Street would be reoptimized to make signals run more efficient and improve throughput progression.

Honoapiilani Highway/Napilihau Street

- An exclusive right-turn lane on the northbound Honoapiilani Highway approach and exclusive left-turn lane and shared through/right-turn lane on the westbound Napilihau Street approach will be constructed as part of West Maui Village roadway improvements.

7.2 Base Year 2022 Mitigation

The following mitigations are proposed for Base Year 2022 by other entities.

[7] Honoapiilani Highway/Kaanapali Parkway/Halelo Street

- Modify the eastbound approach to incorporate a dedicated left-turn lane, a shared left-turn/through lane and two (2) dedicated right-turn lanes.

7.3 Future Year 2022 Scenario 2 Mitigation

The following mitigations are proposed for Future Year 2022 Scenario 2.

[3] Honoapiilani Highway/Akahele Street

- Optimize existing signal timing to accommodate turning movement increases
- Lengthen existing left-turn storage lane lengths to provide the following storage space. Note, storage lane lengths shown below are exclusive of taper length or deceleration length and will need to be verified upon design:

- Northbound left-turn lane → Lengthen left-turn lane to provide at least 275 feet of storage space.
- Southbound left-turn lane → Lengthen left-turn lane to provide at least 275 feet of storage space.
- Westbound left-turn lane → Lengthen left-turn lane to provide at least 300 feet of storage space.

[12] Honoapiilani Highway/Retail Area North RIRO

- Provide a new RIRO access for direct entry/exit to Retail Area North via Honoapiilani Highway. Storage lane lengths shown below are exclusive of deceleration/taper length and will need to be verified upon design. Based on AASHTO Green Book, 425 feet accommodates full deceleration length with a design speed of 50 mph.
    - Northbound right-turn lane → Provide at least 100 feet of storage space.

[14-15] Akahele Street intersection with Road A and Road C

- Consider providing exclusive left-turn storage lanes along Akahele Street at its intersections with Road A and Road C to remove left-turns from the through lanes along Akahele Street.

7.4 Future Year 2027 Scenario 3 Mitigation

[13] Honoapiilani Highway/Road J

- Provide a new unsignalized stop-controlled intersection south of the existing Honoapiilani Highway/Akahele Street intersection, with the westbound approach as the stopped approach:
    - Northbound Approach → Provide one (1) through lane and a new right-turn deceleration lane with at least 100 feet of storage space. Additional taper and/or deceleration length to be provided based upon design. AASHTO Green Book recommends 425 feet for full deceleration length with a design speed of 50 mph.
    - Southbound Approach → Provide one (1) through lane and a new right-turn deceleration lane with at least 100 feet of storage space. Additional taper and/or deceleration length to be provided based upon design. AASHTO Green Book recommends 425 feet for full deceleration length with a design speed of 50 mph.
        - Construct a median refuge lane to facilitate westbound left-turn traffic exiting Road J going onto Honoapiilani Highway.
    - Westbound Approach → Provide a new left-turn storage lane and a new 100 feet right-turn storage lane.

7.5 Future Year 2027 Scenario 4 Mitigation

[10] Honoapiilani Highway/Kapunakea Street

- Restripe the eastbound approach to provide an exclusive left-turn lane and a shared through/right-turn lane.

8. REFERENCES

1. American Association of State Highway and Transportation Officials, A Policy on Geometric Design of Highways and Streets, 2011.
2. Federal Highway Administration, Manual on Uniform Traffic Control Devices, 2009.
3. Institute of Transportation Engineers, Trip Generation, 9th Edition, 2012.
4. Transportation Research Board, Highway Capacity Manual, 2010.

A P P E N D I C E S

APPENDIX A

TRAFFIC COUNT DATA

AUSTIN TSUTSUMI & ASSOCIATES

501 Sumner Street, Suite 521
Honolulu, HI 96817-5031
Phone: (808) 533-3646 Fax: (808) 526-1267

File Name : AM_Honoapiilani Hwy - Napilihau St
Site Code : 00000000
Start Date : 12/1/2016
Page No : 1

Groups Printed- Unshifted

	HONOAPIILANI HWY Southbound				NAPILIHAU ST Westbound				HONOAPIILANI HWY Northbound				NAPILIHAU ST Eastbound				
Start Time	**Left**	**Thru**	**Right**	**Peds**	**Left**	**Thru**	**Right**	**Peds**	**Left**	**Thru**	**Right**	**Peds**	**Left**	**Thru**	**Right**	**Peds**	**Int. Total**
06:15 AM	0	16	6	0	1	0	0	0	19	24	2	0	10	0	30	0	108
06:30 AM	0	24	5	2	1	1	0	0	28	23	4	0	12	2	71	0	173
06:45 AM	0	28	4	0	5	2	2	0	41	49	4	0	8	4	67	0	214
Total	0	68	15	2	7	3	2	0	88	96	10	0	30	6	168	0	495
07:00 AM	1	19	2	1	7	2	1	0	43	32	5	0	7	0	82	0	202
07:15 AM	0	37	6	0	3	3	0	0	61	50	8	0	16	5	87	0	276
07:30 AM	0	12	2	1	1	2	1	0	18	31	6	0	7	6	47	0	134
07:45 AM	2	27	6	1	20	14	4	0	60	61	46	0	11	20	76	0	348
Total	3	95	16	3	31	21	6	0	182	174	65	0	41	31	292	0	960
08:00 AM	3	41	16	1	28	9	5	0	63	62	24	0	14	6	61	0	333
Grand Total	6	204	47	6	66	33	13	0	333	332	99	0	85	43	521	0	1788
Apprch %	2.3	77.6	17.9	2.3	58.9	29.5	11.6	0	43.6	43.5	13	0	13.1	6.6	80.3	0	
Total %	0.3	11.4	2.6	0.3	3.7	1.8	0.7	0	18.6	18.6	5.5	0	4.8	2.4	29.1	0	

AUSTIN TSUTSUMI & ASSOCIATES

501 Sumner Street, Suite 521
Honolulu, HI 96817-5031
Phone: (808) 533-3646 Fax: (808) 526-1267

File Name : AM_Honoapiilani Hwy - Napilihau St
Site Code : 00000000
Start Date : 12/1/2016
Page No : 2

	HONOAPIILANI HWY Southbound					NAPILIHAU ST Westbound					HONOAPIILANI HWY Northbound					NAPILIHAU ST Eastbound					
Start Time	**Left**	**Thru**	**Right**	**Peds**	**App. Total**	**Left**	**Thru**	**Right**	**Peds**	**App. Total**	**Left**	**Thru**	**Right**	**Peds**	**App. Total**	**Left**	**Thru**	**Right**	**Peds**	**App. Total**	**Int. Total**
Peak Hour Analysis From 06:15 AM to 08:00 AM - Peak 1 of 1																					
Peak Hour for Entire Intersection Begins at 07:15 AM																					
07:15 AM	0	37	6	0	43	3	3	0	0	6	61	50	8	0	119	**16**	5	**87**	0	**108**	276
07:30 AM	0	12	2	**1**	15	1	2	1	0	4	18	31	6	0	55	7	6	47	0	60	134
07:45 AM	2	27	6	1	36	20	**14**	4	0	38	60	61	**46**	0	**167**	11	**20**	76	0	107	**348**
08:00 AM	**3**	**41**	**16**	1	**61**	**28**	9	**5**	0	**42**	**63**	**62**	24	0	149	14	6	61	0	81	333
Total Volume	5	117	30	3	155	52	28	10	0	90	202	204	84	0	490	48	37	271	0	356	1091
% App. Total	3.2	75.5	19.4	1.9		57.8	31.1	11.1	0		41.2	41.6	17.1	0		13.5	10.4	76.1	0		
PHF	.417	.713	.469	.750	.635	.464	.500	.500	.000	.536	.802	.823	.457	.000	.734	.750	.463	.779	.000	.824	.784

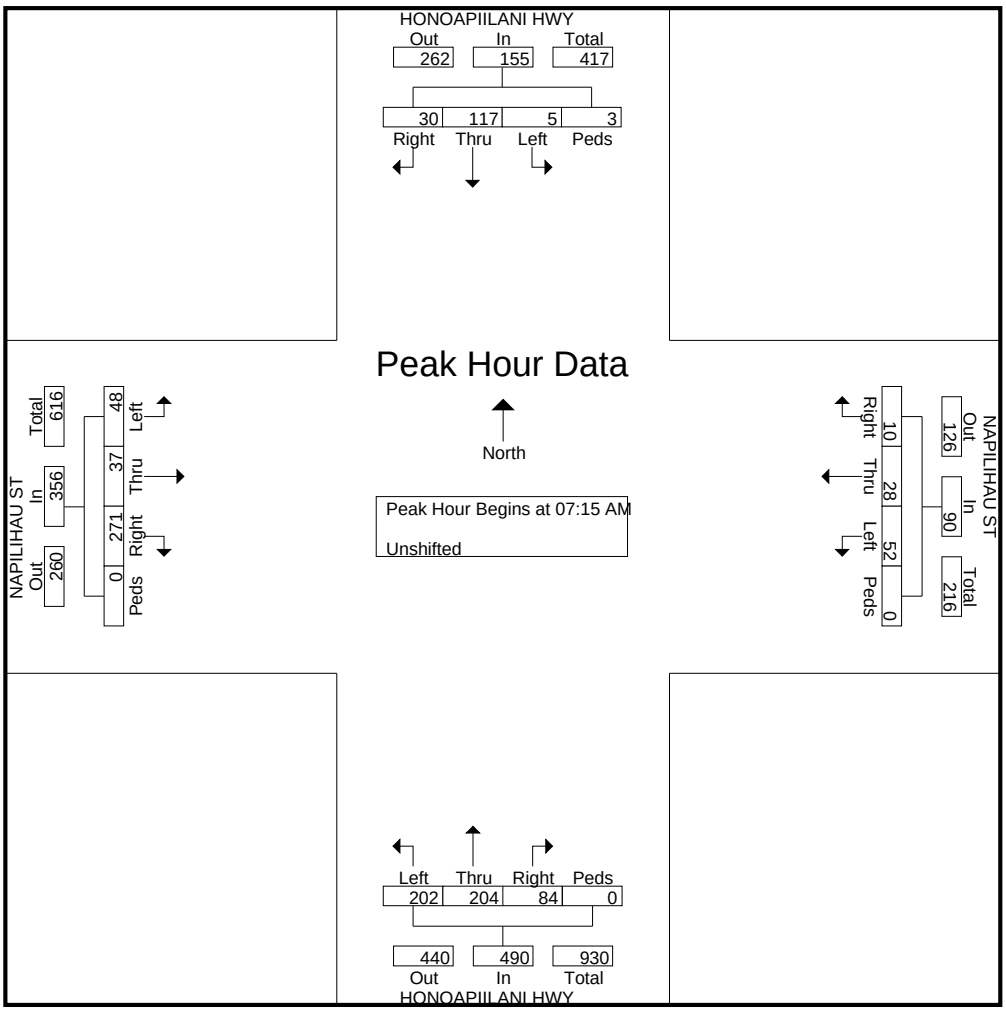

AUSTIN TSUTSUMI & ASSOCIATES

501 Sumner Street, Suite 521
Honolulu, HI 96817-5031
Phone: (808) 533-3646 Fax: (808) 526-1267

File Name : AM_Honoapiilani Hwy - Hoohui Rd
Site Code : 00000000
Start Date : 12/1/2016
Page No : 1

Groups Printed- Unshifted

	HONOAPIILANI HWY Southbound				HOOHUI RD Westbound				HONOAPIILANI HWY Northbound				HOOHUI RD Eastbound				
Start Time	**Left**	**Thru**	**Right**	**Peds**	**Left**	**Thru**	**Right**	**Peds**	**Left**	**Thru**	**Right**	**Peds**	**Left**	**Thru**	**Right**	**Peds**	**Int. Total**
06:15 AM	0	43	8	1	5	0	0	1	6	43	1	0	8	0	23	0	139
06:30 AM	0	80	8	0	12	3	3	0	7	47	1	0	8	2	32	0	203
06:45 AM	0	96	10	1	12	2	5	0	14	74	3	0	10	0	35	0	262
Total	0	219	26	2	29	5	8	1	27	164	5	0	26	2	90	0	604
07:00 AM	1	107	10	1	22	5	2	0	15	62	5	0	10	0	48	0	288
07:15 AM	1	113	19	2	36	6	2	1	23	89	1	1	11	0	36	0	341
07:30 AM	1	89	19	5	18	3	4	3	24	110	3	0	15	1	54	0	349
07:45 AM	6	111	10	2	16	6	3	2	37	117	5	0	19	2	41	0	377
Total	9	420	58	10	92	20	11	6	99	378	14	1	55	3	179	0	1355
08:00 AM	1	119	13	1	14	3	4	0	39	137	4	0	13	0	32	0	380
Grand Total	10	758	97	13	135	28	23	7	165	679	23	1	94	5	301	0	2339
Apprch %	1.1	86.3	11	1.5	69.9	14.5	11.9	3.6	19	78.2	2.6	0.1	23.5	1.2	75.2	0	
Total %	0.4	32.4	4.1	0.6	5.8	1.2	1	0.3	7.1	29	1	0	4	0.2	12.9	0	

AUSTIN TSUTSUMI & ASSOCIATES

501 Sumner Street, Suite 521
Honolulu, HI 96817-5031
Phone: (808) 533-3646 Fax: (808) 526-1267

File Name : AM_Honoapiilani Hwy - Hoohui Rd
Site Code : 00000000
Start Date : 12/1/2016
Page No : 2

	HONOAPIILANI HWY Southbound					HOOHUI RD Westbound					HONOAPIILANI HWY Northbound					HOOHUI RD Eastbound					
Start Time	**Left**	**Thru**	**Right**	**Peds**	**App. Total**	**Left**	**Thru**	**Right**	**Peds**	**App. Total**	**Left**	**Thru**	**Right**	**Peds**	**App. Total**	**Left**	**Thru**	**Right**	**Peds**	**App. Total**	**Int. Total**
Peak Hour Analysis From 06:15 AM to 08:00 AM - Peak 1 of 1																					
Peak Hour for Entire Intersection Begins at 07:15 AM																					
07:15 AM	1	113	**19**	2	**135**	**36**	**6**	2	1	**45**	23	89	1	**1**	114	11	0	36	0	47	341
07:30 AM	1	89	19	**5**	114	18	3	**4**	**3**	28	24	110	3	0	137	15	1	**54**	0	**70**	349
07:45 AM	**6**	111	10	2	129	16	6	3	2	27	37	117	**5**	0	159	**19**	**2**	41	0	62	377
08:00 AM	1	**119**	13	1	134	14	3	4	0	21	**39**	**137**	4	0	**180**	13	0	32	0	45	**380**
Total Volume	9	432	61	10	512	84	18	13	6	121	123	453	13	1	590	58	3	163	0	224	1447
% App. Total	1.8	84.4	11.9	2		69.4	14.9	10.7	5		20.8	76.8	2.2	0.2		25.9	1.3	72.8	0		
PHF	.375	.908	.803	.500	.948	.583	.750	.813	.500	.672	.788	.827	.650	.250	.819	.763	.375	.755	.000	.800	.952

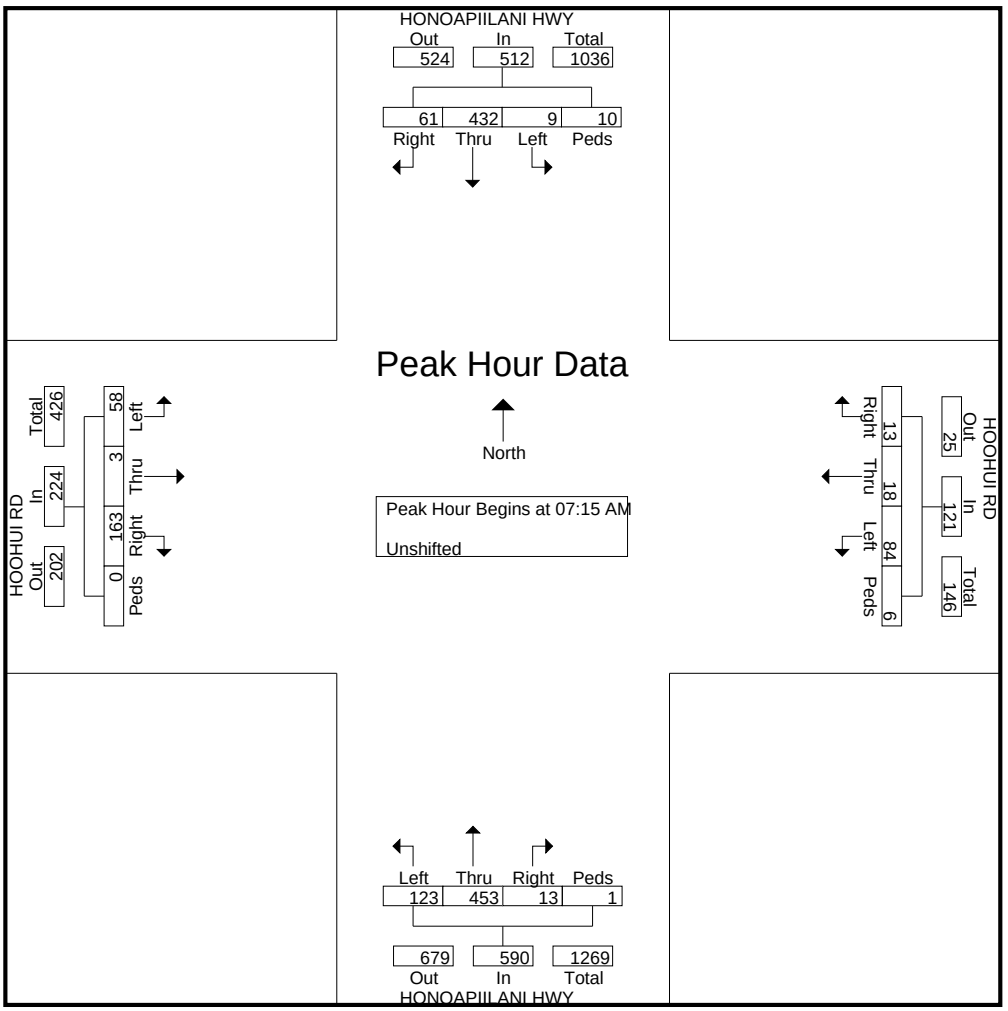

AUSTIN TSUTSUMI & ASSOCIATES

501 Sumner Street, Suite 521
Honolulu, HI 96817-5031
Phone: (808) 533-3646 Fax: (808) 526-1267

File Name : AM_Honoapiilani Hwy - Akahele St
Site Code : 00000000
Start Date : 12/7/2016
Page No : 1

Groups Printed- Unshifted - Bank 1

	HONOAPIILANI HWY Southbound				AKAHELE ST Westbound				HONOAPIILANI HWY Northbound				AKAHELE ST Eastbound				
Start Time	Left	Thru	Right	Peds	Left	Thru	Right	Peds	Left	Thru	Right	Peds	Left	Thru	Right	Peds	Int. Total
06:15 AM	1	70	4	0	1	0	0	0	3	54	1	1	10	0	8	1	154
06:30 AM	3	102	3	0	1	0	1	0	5	72	2	0	13	1	17	0	220
06:45 AM	1	163	11	0	1	1	0	0	6	87	1	0	13	2	18	2	306
Total	5	335	18	0	3	1	1	0	14	213	4	1	36	3	43	3	680
07:00 AM	3	166	9	0	1	1	1	0	5	80	4	1	13	0	37	0	321
07:15 AM	1	185	4	2	2	0	2	0	10	104	3	0	5	0	46	3	367
07:30 AM	3	162	7	0	1	0	1	0	12	113	1	1	10	0	30	1	342
07:45 AM	0	136	10	2	1	1	1	0	19	134	4	2	12	1	23	1	347
Total	7	649	30	4	5	2	5	0	46	431	12	4	40	1	136	5	1377
08:00 AM	1	129	7	0	1	0	0	0	11	176	3	0	12	0	14	2	356
08:15 AM	1	114	6	0	2	2	0	0	10	121	3	1	8	1	19	3	291
Grand Total	14	1227	61	4	11	5	6	0	81	941	22	6	96	5	212	13	2704
Apprch %	1.1	94	4.7	0.3	50	22.7	27.3	0	7.7	89.6	2.1	0.6	29.4	1.5	65	4	
Total %	0.5	45.4	2.3	0.1	0.4	0.2	0.2	0	3	34.8	0.8	0.2	3.6	0.2	7.8	0.5	
Unshifted	14	1227	61	4	11	5	6	0	81	941	22	6	96	5	212	13	2704
% Unshifted	100	100	100	100	100	100	100	0	100	100	100	100	100	100	100	100	100
Bank 1	0	0	0	0	0	0	0	0	0	0	0	0	0	0	0	0	0
% Bank 1	0	0	0	0	0	0	0	0	0	0	0	0	0	0	0	0	0

AUSTIN TSUTSUMI & ASSOCIATES

501 Sumner Street, Suite 521
Honolulu, HI 96817-5031
Phone: (808) 533-3646 Fax: (808) 526-1267

File Name : AM_Honoapiilani Hwy - Akahele St
Site Code : 00000000
Start Date : 12/7/2016
Page No : 2

	HONOAPIILANI HWY Southbound					AKAHELE ST Westbound					HONOAPIILANI HWY Northbound					AKAHELE ST Eastbound					
Start Time	Left	Thru	Right	Peds	App. Total	Left	Thru	Right	Peds	App. Total	Left	Thru	Right	Peds	App. Total	Left	Thru	Right	Peds	App. Total	Int. Total
Peak Hour Analysis From 06:15 AM to 08:15 AM - Peak 1 of 1																					
Peak Hour for Entire Intersection Begins at 07:15 AM																					
07:15 AM	1	**185**	4	**2**	**192**	**2**	0	**2**	0	**4**	10	104	3	0	117	5	0	**46**	**3**	**54**	**367**
07:30 AM	**3**	162	7	0	172	1	0	1	0	2	12	113	1	1	127	10	0	30	1	41	342
07:45 AM	0	136	**10**	2	148	1	**1**	1	0	3	**19**	134	**4**	**2**	159	**12**	**1**	23	1	37	347
08:00 AM	1	129	7	0	137	1	0	0	0	1	11	**176**	3	0	**190**	12	0	14	2	28	356
Total Volume	5	612	28	4	649	5	1	4	0	10	52	527	11	3	593	39	1	113	7	160	1412
% App. Total	0.8	94.3	4.3	0.6		50	10	40	0		8.8	88.9	1.9	0.5		24.4	0.6	70.6	4.4		
PHF	.417	.827	.700	.500	.845	.625	.250	.500	.000	.625	.684	.749	.688	.375	.780	.813	.250	.614	.583	.741	.962

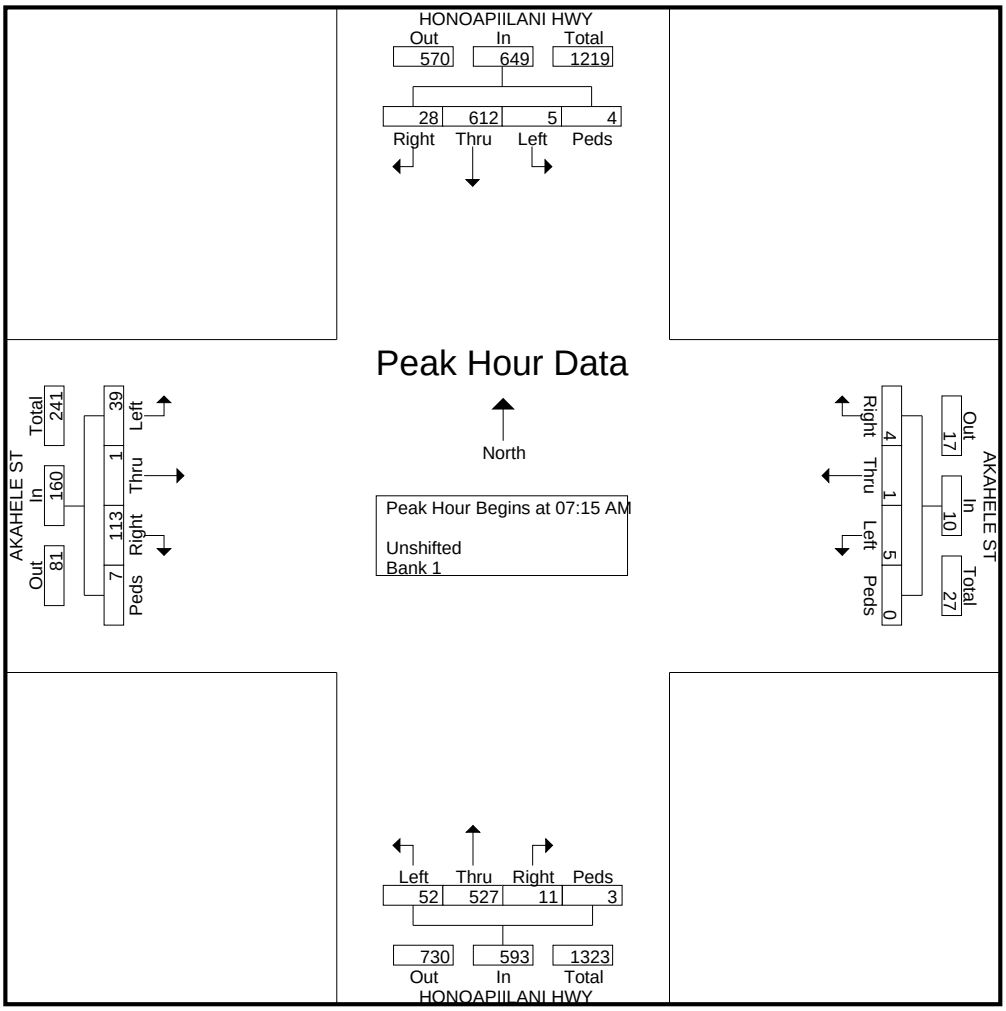

AUSTIN TSUTSUMI & ASSOCIATES

501 Sumner Street, Suite 521
Honolulu, HI 96817-5031
Phone: (808) 533-3646 Fax: (808) 526-1267

File Name : AM_Honoapiilani Hwy - Lower Honoapiilani Rd
Site Code : 00000000
Start Date : 12/7/2016
Page No : 1

Groups Printed- Unshifted

	HONOAPIILANI HWY Southbound				LOWER HONOAPIILANI R Westbound				HONOAPIILANI HWY Northbound				LOWER HONOAPIILANI R Eastbound				
Start Time	**Left**	**Thru**	**Right**	**Peds**	**Left**	**Thru**	**Right**	**Peds**	**Left**	**Thru**	**Right**	**Peds**	**Left**	**Thru**	**Right**	**Peds**	**Int. Total**
06:30 AM	6	97	3	0	14	0	0	0	46	85	33	0	6	0	57	0	347
06:45 AM	2	150	0	0	5	0	3	0	41	77	29	0	10	3	96	0	416
Total	8	247	3	0	19	0	3	0	87	162	62	0	16	3	153	0	763
07:00 AM	0	177	0	0	4	0	0	0	64	92	18	0	13	4	89	0	461
07:15 AM	3	199	0	0	1	0	0	0	59	105	12	0	8	2	116	0	505
07:30 AM	3	178	10	1	6	0	0	0	90	135	14	0	6	2	112	0	557
07:45 AM	1	145	0	1	2	1	0	0	73	181	5	0	11	2	94	0	516
Total	7	699	10	2	13	1	0	0	286	513	49	0	38	10	411	0	2039
08:00 AM	1	169	0	0	8	2	0	0	65	171	7	0	5	1	111	0	540
08:15 AM	1	117	0	0	4	2	2	0	81	123	7	0	10	0	105	0	452
Grand Total	17	1232	13	2	44	5	5	0	519	969	125	0	69	14	780	0	3794
Apprch %	1.3	97.5	1	0.2	81.5	9.3	9.3	0	32.2	60.1	7.7	0	8	1.6	90.4	0	
Total %	0.4	32.5	0.3	0.1	1.2	0.1	0.1	0	13.7	25.5	3.3	0	1.8	0.4	20.6	0	

AUSTIN TSUTSUMI & ASSOCIATES

501 Sumner Street, Suite 521
Honolulu, HI 96817-5031
Phone: (808) 533-3646 Fax: (808) 526-1267

File Name : AM_Honoapiilani Hwy - Lower Honoapiilani Rd
Site Code : 00000000
Start Date : 12/7/2016
Page No : 2

	HONOAPIILANI HWY Southbound					LOWER HONOAPIILANI R Westbound					HONOAPIILANI HWY Northbound					LOWER HONOAPIILANI R Eastbound					
Start Time	**Left**	**Thru**	**Right**	**Peds**	**App. Total**	**Left**	**Thru**	**Right**	**Peds**	**App. Total**	**Left**	**Thru**	**Right**	**Peds**	**App. Total**	**Left**	**Thru**	**Right**	**Peds**	**App. Total**	**Int. Total**
Peak Hour Analysis From 06:30 AM to 08:15 AM - Peak 1 of 1																					
Peak Hour for Entire Intersection Begins at 07:15 AM																					
07:15 AM	**3**	**199**	0	0	**202**	1	0	0	0	1	59	105	12	0	176	8	**2**	**116**	0	**126**	505
07:30 AM	3	178	**10**	**1**	192	6	0	0	0	6	**90**	135	**14**	0	239	6	2	112	0	120	**557**
07:45 AM	1	145	0	1	147	2	1	0	0	3	73	**181**	5	0	**259**	**11**	2	94	0	107	516
08:00 AM	1	169	0	0	170	**8**	**2**	0	0	**10**	65	171	7	0	243	5	1	111	0	117	540
Total Volume	8	691	10	2	711	17	3	0	0	20	287	592	38	0	917	30	7	433	0	470	2118
% App. Total	1.1	97.2	1.4	0.3		85	15	0	0		31.3	64.6	4.1	0		6.4	1.5	92.1	0		
PHF	.667	.868	.250	.500	.880	.531	.375	.000	.000	.500	.797	.818	.679	.000	.885	.682	.875	.933	.000	.933	.951

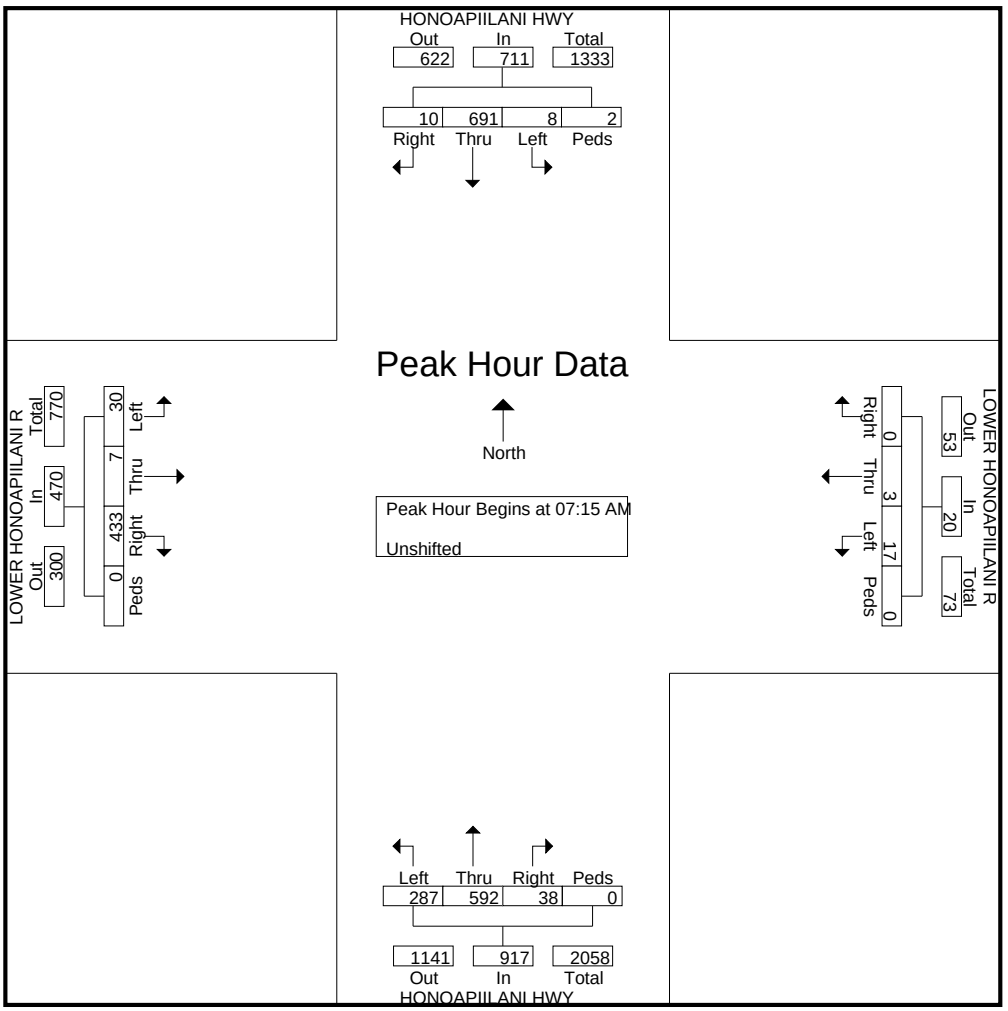

AUSTIN TSUTSUMI & ASSOCIATES

501 Sumner Street, Suite 521
Honolulu, HI 96817-5031
Phone: (808) 533-3646 Fax: (808) 526-1267

File Name : AM_Honoapiilani Hwy - Halawai Dr
Site Code : 00000000
Start Date : 12/7/2016
Page No : 1

Groups Printed- Unshifted

	HONOAPIILANI HWY Southbound				HALAWAI DR Westbound				HONOAPIILANI HWY Northbound				HALAWAI DR Eastbound				
Start Time	**Left**	**Thru**	**Right**	**Peds**	**Left**	**Thru**	**Right**	**Peds**	**Left**	**Thru**	**Right**	**Peds**	**Left**	**Thru**	**Right**	**Peds**	**Int. Total**
06:15 AM	0	130	11	0	0	0	0	0	14	123	3	1	12	0	2	0	296
06:30 AM	1	151	15	0	1	0	0	0	13	159	4	0	13	0	7	0	364
06:45 AM	1	243	12	0	0	0	1	0	16	138	3	0	9	0	6	0	429
Total	2	524	38	0	1	0	1	0	43	420	10	1	34	0	15	0	1089
07:00 AM	0	261	5	0	2	1	3	0	20	163	4	0	2	0	4	0	465
07:15 AM	1	330	11	0	2	1	1	0	16	190	2	0	6	0	6	0	566
07:30 AM	3	298	13	0	2	0	0	0	13	223	3	0	2	0	14	0	571
07:45 AM	4	248	4	0	4	0	3	0	19	289	6	0	5	0	6	0	588
Total	8	1137	33	0	10	2	7	0	68	865	15	0	15	0	30	0	2190
08:00 AM	6	253	10	0	0	0	2	0	16	272	5	0	3	0	7	0	574
Grand Total	16	1914	81	0	11	2	10	0	127	1557	30	1	52	0	52	0	3853
Apprch %	0.8	95.2	4	0	47.8	8.7	43.5	0	7.4	90.8	1.7	0.1	50	0	50	0	
Total %	0.4	49.7	2.1	0	0.3	0.1	0.3	0	3.3	40.4	0.8	0	1.3	0	1.3	0	

AUSTIN TSUTSUMI & ASSOCIATES

501 Sumner Street, Suite 521
Honolulu, HI 96817-5031
Phone: (808) 533-3646 Fax: (808) 526-1267

File Name : AM_Honoapiilani Hwy - Halawai Dr
Site Code : 00000000
Start Date : 12/7/2016
Page No : 2

	HONOAPIILANI HWY Southbound					HALAWAI DR Westbound					HONOAPIILANI HWY Northbound					HALAWAI DR Eastbound					
Start Time	**Left**	**Thru**	**Right**	**Peds**	**App. Total**	**Left**	**Thru**	**Right**	**Peds**	**App. Total**	**Left**	**Thru**	**Right**	**Peds**	**App. Total**	**Left**	**Thru**	**Right**	**Peds**	**App. Total**	**Int. Total**
Peak Hour Analysis From 06:15 AM to 08:00 AM - Peak 1 of 1																					
Peak Hour for Entire Intersection Begins at 07:15 AM																					
07:15 AM	1	**330**	11	0	**342**	2	**1**	1	0	4	16	190	2	0	208	**6**	0	6	0	12	566
07:30 AM	3	298	**13**	0	314	2	0	0	0	2	13	223	3	0	239	2	0	**14**	0	**16**	571
07:45 AM	4	248	4	0	256	**4**	0	**3**	0	**7**	**19**	**289**	**6**	0	**314**	5	0	6	0	11	**588**
08:00 AM	**6**	253	10	0	269	0	0	2	0	2	16	272	5	0	293	3	0	7	0	10	574
Total Volume	14	1129	38	0	1181	8	1	6	0	15	64	974	16	0	1054	16	0	33	0	49	2299
% App. Total	1.2	95.6	3.2	0		53.3	6.7	40	0		6.1	92.4	1.5	0		32.7	0	67.3	0		
PHF	.583	.855	.731	.000	.863	.500	.250	.500	.000	.536	.842	.843	.667	.000	.839	.667	.000	.589	.000	.766	.977

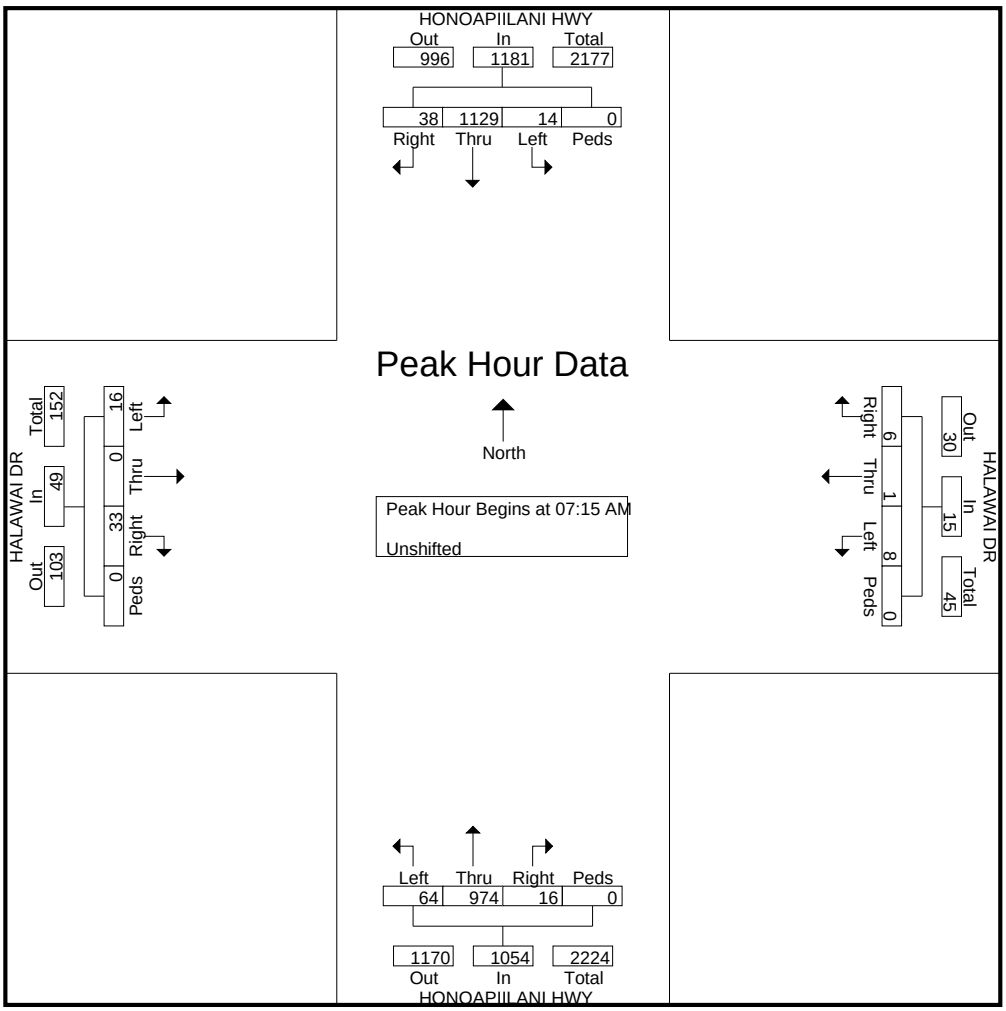

AUSTIN TSUTSUMI & ASSOCIATES

501 Sumner Street, Suite 521
Honolulu, HI 96817-5031
Phone: (808) 533-3646 Fax: (808) 526-1267

File Name : AM_Honoapiilani Hwy - Puukolii Rd
Site Code : 00000000
Start Date : 12/7/2016
Page No : 1

Groups Printed- Unshifted

	HONOAPIILANI HWY Southbound				PUUKOLII RD Westbound				HONOAPIILANI HWY Northbound				PUUKOLII RD Eastbound				
Start Time	**Left**	**Thru**	**Right**	**Peds**	**Left**	**Thru**	**Right**	**Peds**	**Left**	**Thru**	**Right**	**Peds**	**Left**	**Thru**	**Right**	**Peds**	**Int. Total**
06:15 AM	1	118	5	2	1	0	3	0	12	140	3	0	3	0	12	0	300
06:30 AM	1	142	9	1	5	1	7	0	13	154	3	0	6	0	13	0	355
06:45 AM	1	228	12	3	6	0	4	0	19	140	8	0	4	0	8	0	433
Total	3	488	26	6	12	1	14	0	44	434	14	0	13	0	33	0	1088
07:00 AM	2	254	5	0	2	0	3	0	5	119	3	0	8	0	1	0	402
07:15 AM	6	305	6	0	10	0	3	0	22	209	12	0	6	0	7	0	586
07:30 AM	1	293	12	0	9	6	8	0	31	235	10	0	12	1	6	0	624
07:45 AM	7	239	12	1	12	5	21	0	19	258	17	0	16	1	7	0	615
Total	16	1091	35	1	33	11	35	0	77	821	42	0	42	2	21	0	2227
08:00 AM	10	223	7	0	8	2	9	0	30	263	15	0	11	2	10	0	590
Grand Total	29	1802	68	7	53	14	58	0	151	1518	71	0	66	4	64	0	3905
Apprch %	1.5	94.5	3.6	0.4	42.4	11.2	46.4	0	8.7	87.2	4.1	0	49.3	3	47.8	0	
Total %	0.7	46.1	1.7	0.2	1.4	0.4	1.5	0	3.9	38.9	1.8	0	1.7	0.1	1.6	0	

AUSTIN TSUTSUMI & ASSOCIATES

501 Sumner Street, Suite 521
Honolulu, HI 96817-5031
Phone: (808) 533-3646 Fax: (808) 526-1267

File Name : AM_Honoapiilani Hwy - Puukolii Rd
Site Code : 00000000
Start Date : 12/7/2016
Page No : 2

	HONOAPIILANI HWY Southbound					PUUKOLII RD Westbound					HONOAPIILANI HWY Northbound					PUUKOLII RD Eastbound					
Start Time	**Left**	**Thru**	**Right**	**Peds**	**App. Total**	**Left**	**Thru**	**Right**	**Peds**	**App. Total**	**Left**	**Thru**	**Right**	**Peds**	**App. Total**	**Left**	**Thru**	**Right**	**Peds**	**App. Total**	**Int. Total**
Peak Hour Analysis From 06:15 AM to 08:00 AM - Peak 1 of 1																					
Peak Hour for Entire Intersection Begins at 07:15 AM																					
07:15 AM	6	**305**	6	0	**317**	10	0	3	0	13	22	209	12	0	243	6	0	7	0	13	586
07:30 AM	1	293	**12**	0	306	9	**6**	8	0	23	**31**	235	10	0	276	12	1	6	0	19	**624**
07:45 AM	7	239	12	**1**	259	**12**	5	**21**	0	**38**	19	258	**17**	0	294	**16**	1	7	0	**24**	615
08:00 AM	**10**	223	7	0	240	8	2	9	0	19	30	**263**	15	0	**308**	11	**2**	**10**	0	23	590
Total Volume	24	1060	37	1	1122	39	13	41	0	93	102	965	54	0	1121	45	4	30	0	79	2415
% App. Total	2.1	94.5	3.3	0.1		41.9	14	44.1	0		9.1	86.1	4.8	0		57	5.1	38	0		
PHF	.600	.869	.771	.250	.885	.813	.542	.488	.000	.612	.823	.917	.794	.000	.910	.703	.500	.750	.000	.823	.968

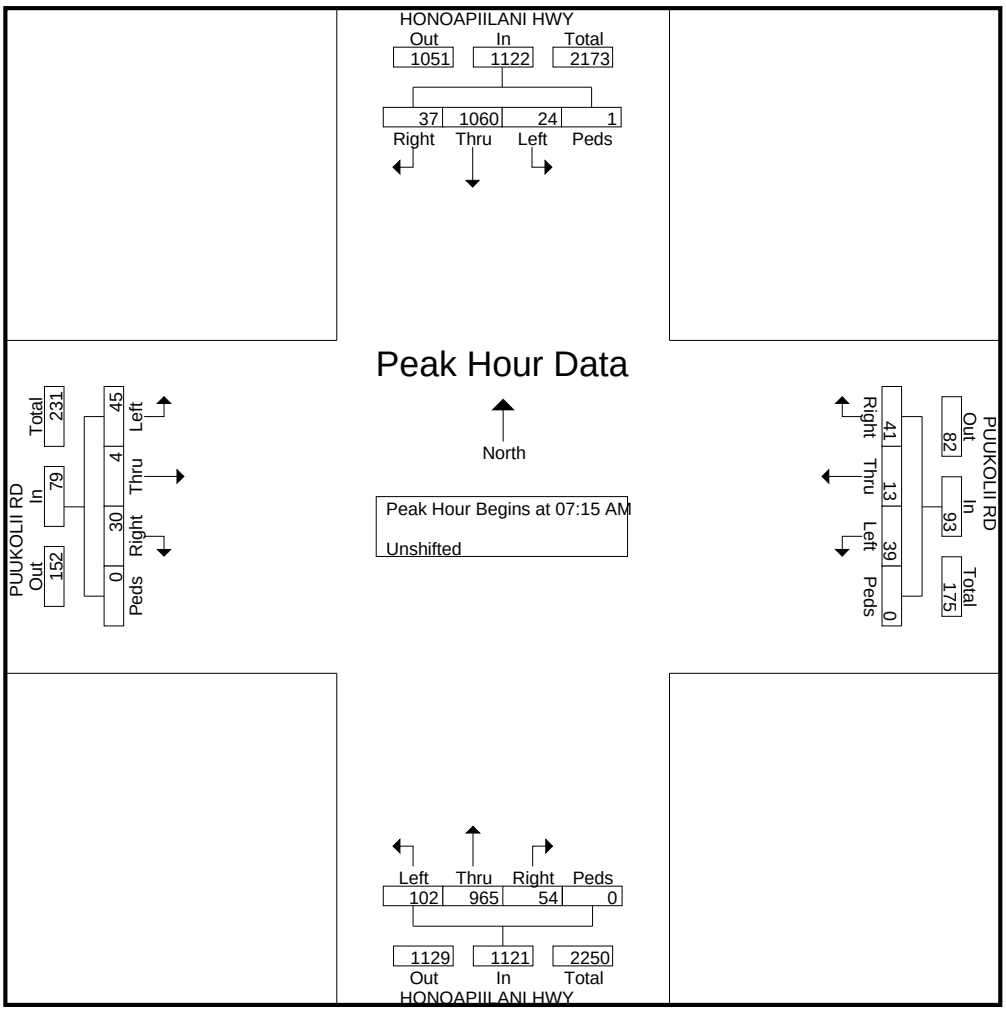

AUSTIN TSUTSUMI & ASSOCIATES

501 Sumner Street, Suite 521
Honolulu, HI 96817-5031
Phone: (808) 533-3646 Fax: (808) 526-1267

File Name : AM_Honoapiilani Hwy - Kaanapali Pkwy
Site Code : 00000000
Start Date : 12/7/2016
Page No : 1

Groups Printed- Unshifted

	HONOAPIILANI HWY Southbound				KAANAPALI PKWY Westbound				HONOAPIILANI HWY Northbound				KAANAPALI PKWY Eastbound				
Start Time	**Left**	**Thru**	**Right**	**Peds**	**Left**	**Thru**	**Right**	**Peds**	**Left**	**Thru**	**Right**	**Peds**	**Left**	**Thru**	**Right**	**Peds**	**Int. Total**
06:15 AM	5	114	9	0	0	1	0	0	50	142	4	0	13	0	22	0	360
06:30 AM	3	134	13	0	3	0	2	0	77	180	2	0	11	0	41	0	466
06:45 AM	9	183	26	2	4	8	1	0	81	186	2	0	17	1	42	0	562
Total	17	431	48	2	7	9	3	0	208	508	8	0	41	1	105	0	1388
07:00 AM	8	251	11	0	2	3	1	0	79	163	0	0	20	2	52	1	593
07:15 AM	17	264	20	0	2	3	1	0	93	218	3	0	18	1	51	0	691
07:30 AM	4	290	30	2	2	3	3	0	113	264	2	0	34	0	54	2	803
07:45 AM	9	232	21	1	3	2	3	0	120	319	5	0	28	0	49	2	794
Total	38	1037	82	3	9	11	8	0	405	964	10	0	100	3	206	5	2881
08:00 AM	10	210	16	2	3	2	1	0	84	270	4	0	35	5	60	2	704
Grand Total	65	1678	146	7	19	22	12	0	697	1742	22	0	176	9	371	7	4973
Apprch %	3.4	88.5	7.7	0.4	35.8	41.5	22.6	0	28.3	70.8	0.9	0	31.3	1.6	65.9	1.2	
Total %	1.3	33.7	2.9	0.1	0.4	0.4	0.2	0	14	35	0.4	0	3.5	0.2	7.5	0.1	

AUSTIN TSUTSUMI & ASSOCIATES

501 Sumner Street, Suite 521
Honolulu, HI 96817-5031
Phone: (808) 533-3646 Fax: (808) 526-1267

File Name : AM_Honoapiilani Hwy - Kaanapali Pkwy
Site Code : 00000000
Start Date : 12/7/2016
Page No : 2

	HONOAPIILANI HWY Southbound					KAANAPALI PKWY Westbound					HONOAPIILANI HWY Northbound					KAANAPALI PKWY Eastbound					
Start Time	**Left**	**Thru**	**Right**	**Peds**	**App. Total**	**Left**	**Thru**	**Right**	**Peds**	**App. Total**	**Left**	**Thru**	**Right**	**Peds**	**App. Total**	**Left**	**Thru**	**Right**	**Peds**	**App. Total**	**Int. Total**
Peak Hour Analysis From 06:15 AM to 08:00 AM - Peak 1 of 1																					
Peak Hour for Entire Intersection Begins at 07:15 AM																					
07:15 AM	**17**	264	20	0	301	2	**3**	1	0	6	93	218	3	0	314	18	1	51	0	70	691
07:30 AM	4	**290**	**30**	**2**	**326**	2	3	**3**	0	**8**	113	264	2	0	379	34	0	54	**2**	90	**803**
07:45 AM	9	232	21	1	263	**3**	2	3	0	8	**120**	**319**	**5**	0	**444**	28	0	49	2	79	794
08:00 AM	10	210	16	2	238	3	2	1	0	6	84	270	4	0	358	**35**	**5**	**60**	2	**102**	704
Total Volume	40	996	87	5	1128	10	10	8	0	28	410	1071	14	0	1495	115	6	214	6	341	2992
% App. Total	3.5	88.3	7.7	0.4		35.7	35.7	28.6	0		27.4	71.6	0.9	0		33.7	1.8	62.8	1.8		
PHF	.588	.859	.725	.625	.865	.833	.833	.667	.000	.875	.854	.839	.700	.000	.842	.821	.300	.892	.750	.836	.932

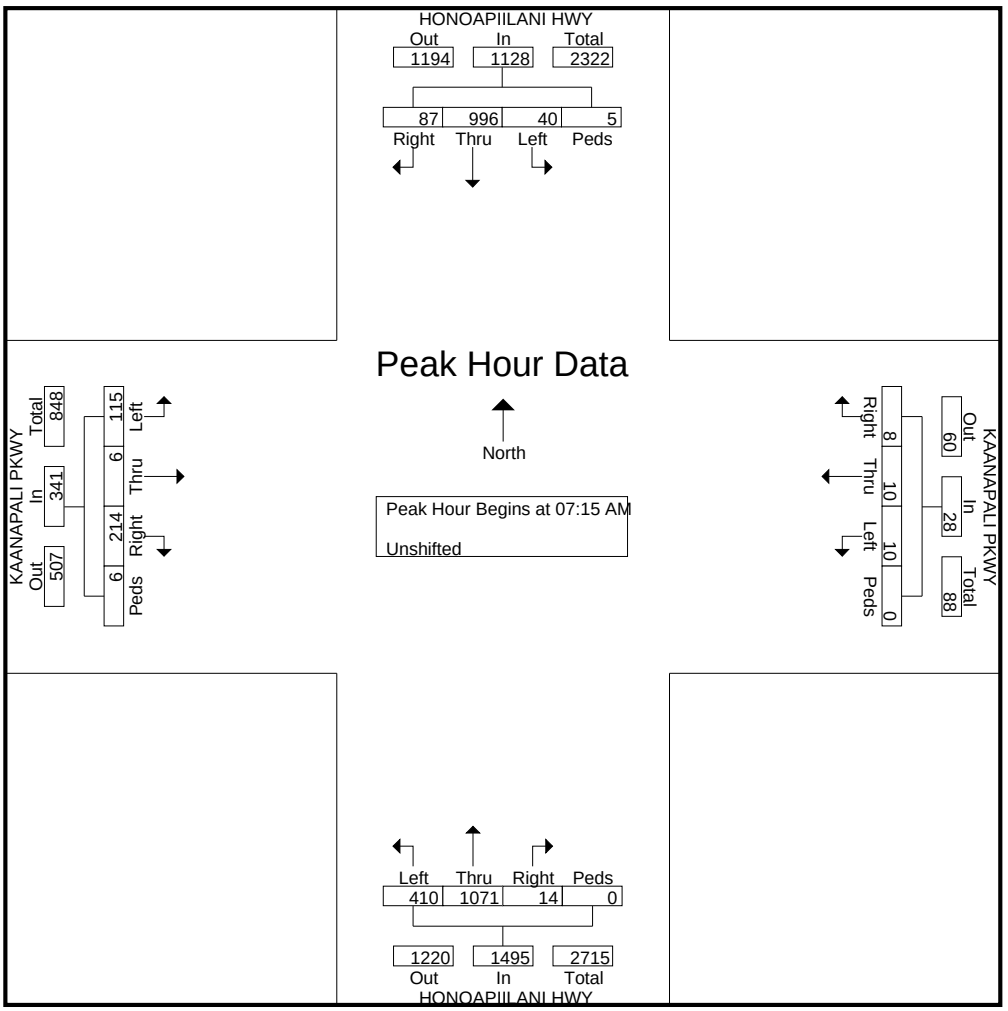

AUSTIN TSUTSUMI & ASSOCIATES

501 Sumner Street, Suite 521
Honolulu, HI 96817-5031
Phone: (808) 533-3646 Fax: (808) 526-1267

File Name : AM_Honoapiilani Hwy - Leialii Pkwy
Site Code : 00000000
Start Date : 12/7/2016
Page No : 1

Groups Printed- Unshifted

	HONOAPIILANI HWY Southbound				LEIALII PKWY Westbound				HONOAPIILANI HWY Northbound				LEIALII PKWY Eastbound				
Start Time	**Left**	**Thru**	**Right**	**Peds**	**Left**	**Thru**	**Right**	**Peds**	**Left**	**Thru**	**Right**	**Peds**	**Left**	**Thru**	**Right**	**Peds**	**Int. Total**
06:15 AM	3	134	0	2	10	0	1	0	0	217	3	0	0	0	0	0	370
06:30 AM	2	173	1	2	9	0	9	1	0	254	7	0	0	0	0	0	458
06:45 AM	3	201	0	1	11	1	11	0	2	245	11	0	0	0	2	0	488
Total	8	508	1	5	30	1	21	1	2	716	21	0	0	0	2	0	1316
07:00 AM	6	320	0	0	16	0	5	2	1	264	14	0	0	0	0	2	630
07:15 AM	5	325	1	0	16	0	7	1	0	333	15	0	1	0	0	0	704
07:30 AM	4	342	1	1	9	0	9	1	0	442	22	0	0	0	2	2	835
07:45 AM	7	272	2	4	16	0	8	2	2	375	23	0	1	1	1	3	717
Total	22	1259	4	5	57	0	29	6	3	1414	74	0	2	1	3	7	2886
08:00 AM	9	251	0	2	15	0	15	0	1	335	26	0	0	0	1	1	656
08:15 AM	6	284	0	1	15	0	12	5	0	312	21	0	0	0	0	1	657
Grand Total	45	2302	5	13	117	1	77	12	6	2777	142	0	2	1	6	9	5515
Apprch %	1.9	97.3	0.2	0.5	56.5	0.5	37.2	5.8	0.2	94.9	4.9	0	11.1	5.6	33.3	50	
Total %	0.8	41.7	0.1	0.2	2.1	0	1.4	0.2	0.1	50.4	2.6	0	0	0	0.1	0.2	

AUSTIN TSUTSUMI & ASSOCIATES

501 Sumner Street, Suite 521
Honolulu, HI 96817-5031
Phone: (808) 533-3646 Fax: (808) 526-1267

File Name : AM_Honoapiilani Hwy - Leialii Pkwy
Site Code : 00000000
Start Date : 12/7/2016
Page No : 2

	HONOAPIILANI HWY Southbound					LEIALII PKWY Westbound					HONOAPIILANI HWY Northbound					LEIALII PKWY Eastbound					
Start Time	**Left**	**Thru**	**Right**	**Peds**	**App. Total**	**Left**	**Thru**	**Right**	**Peds**	**App. Total**	**Left**	**Thru**	**Right**	**Peds**	**App. Total**	**Left**	**Thru**	**Right**	**Peds**	**App. Total**	**Int. Total**
Peak Hour Analysis From 06:15 AM to 08:15 AM - Peak 1 of 1																					
Peak Hour for Entire Intersection Begins at 07:15 AM																					
07:15 AM	5	325	1	0	331	**16**	0	7	1	24	0	333	15	0	348	**1**	0	0	0	1	704
07:30 AM	4	**342**	1	1	**348**	9	0	9	1	19	0	**442**	22	0	**464**	0	0	**2**	2	4	**835**
07:45 AM	7	272	**2**	**4**	285	16	0	8	**2**	26	**2**	375	23	0	400	1	**1**	1	**3**	**6**	717
08:00 AM	**9**	251	0	2	262	15	0	**15**	0	**30**	1	335	**26**	0	362	0	0	1	1	2	656
Total Volume	25	1190	4	7	1226	56	0	39	4	99	3	1485	86	0	1574	2	1	4	6	13	2912
% App. Total	2	97.1	0.3	0.6		56.6	0	39.4	4		0.2	94.3	5.5	0		15.4	7.7	30.8	46.2		
PHF	.694	.870	.500	.438	.881	.875	.000	.650	.500	.825	.375	.840	.827	.000	.848	.500	.250	.500	.500	.542	.872

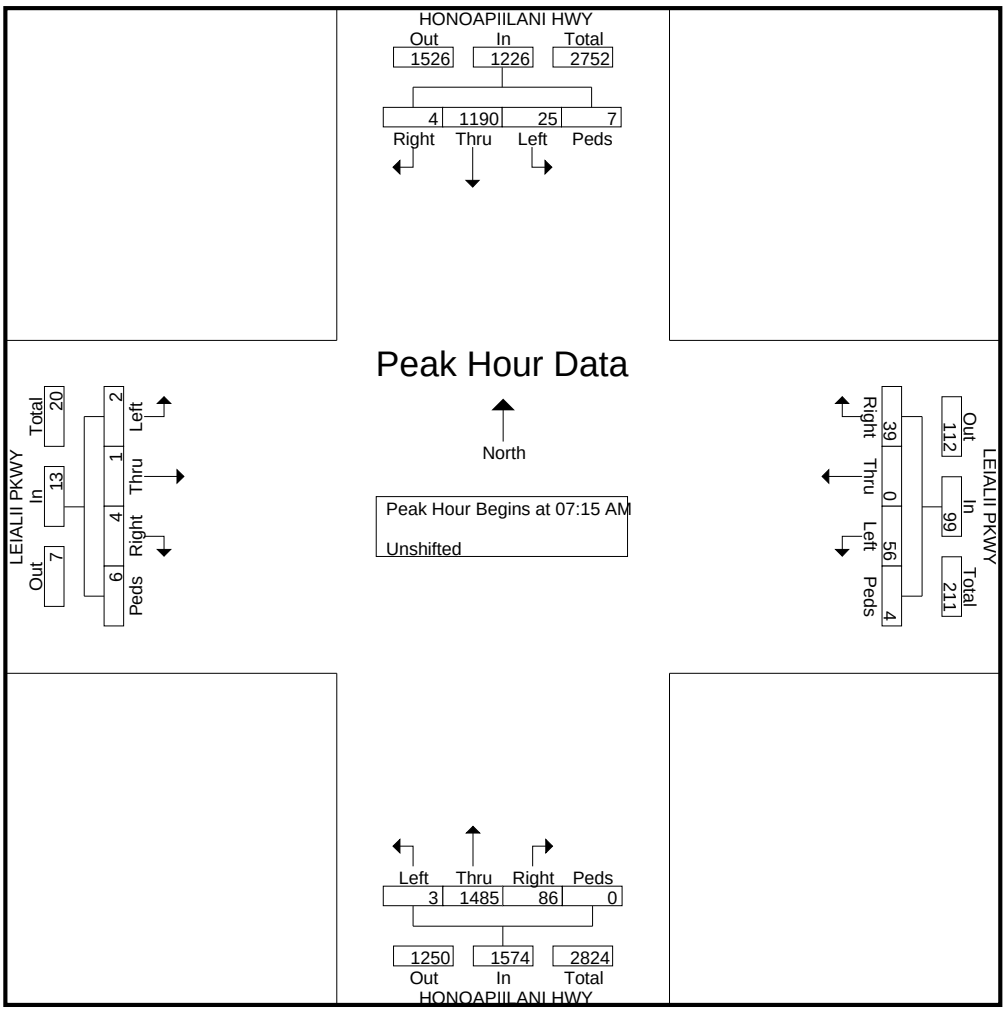

AUSTIN TSUTSUMI & ASSOCIATES

501 Sumner Street, Suite 521
Honolulu, HI 96817-5031
Phone: (808) 533-3646 Fax: (808) 526-1267

File Name : AM_Honoapiilani Hwy - Front St
Site Code : 00000000
Start Date : 12/7/2016
Page No : 1

Groups Printed- Unshifted

	HONOAPIILANI HWY Southbound				FLEMING RD Westbound				HONOAPIILANI HWY Northbound				FRONT ST Eastbound				
Start Time	**Left**	**Thru**	**Right**	**Peds**	**Left**	**Thru**	**Right**	**Peds**	**Left**	**Thru**	**Right**	**Peds**	**Left**	**Thru**	**Right**	**Peds**	**Int. Total**
06:15 AM	0	126	9	0	12	1	2	0	0	208	0	0	2	0	0	3	363
06:30 AM	0	155	12	0	13	2	0	0	1	213	3	0	7	1	0	0	407
06:45 AM	0	183	13	0	15	1	1	0	0	234	1	0	6	0	1	0	455
Total	0	464	34	0	40	4	3	0	1	655	4	0	15	1	1	3	1225
07:00 AM	0	240	31	0	44	4	3	0	0	238	3	0	5	0	0	0	568
07:15 AM	1	280	53	0	29	7	2	0	0	327	2	0	18	0	1	1	721
07:30 AM	1	298	58	0	35	2	7	0	1	422	3	0	20	1	1	0	849
07:45 AM	0	249	32	0	16	1	2	0	0	389	8	0	24	1	0	0	722
Total	2	1067	174	0	124	14	14	0	1	1376	16	0	67	2	2	1	2860
08:00 AM	4	232	24	0	21	5	2	0	1	333	3	0	19	2	1	1	648
Grand Total	6	1763	232	0	185	23	19	0	3	2364	23	0	101	5	4	5	4733
Apprch %	0.3	88.1	11.6	0	81.5	10.1	8.4	0	0.1	98.9	1	0	87.8	4.3	3.5	4.3	
Total %	0.1	37.2	4.9	0	3.9	0.5	0.4	0	0.1	49.9	0.5	0	2.1	0.1	0.1	0.1	

AUSTIN TSUTSUMI & ASSOCIATES

501 Sumner Street, Suite 521
Honolulu, HI 96817-5031
Phone: (808) 533-3646 Fax: (808) 526-1267

File Name : AM_Honoapiilani Hwy - Front St
Site Code : 00000000
Start Date : 12/7/2016
Page No : 2

	HONOAPIILANI HWY Southbound					FLEMING RD Westbound					HONOAPIILANI HWY Northbound					FRONT ST Eastbound					
Start Time	**Left**	**Thru**	**Right**	**Peds**	**App. Total**	**Left**	**Thru**	**Right**	**Peds**	**App. Total**	**Left**	**Thru**	**Right**	**Peds**	**App. Total**	**Left**	**Thru**	**Right**	**Peds**	**App. Total**	**Int. Total**
Peak Hour Analysis From 06:15 AM to 08:00 AM - Peak 1 of 1																					
Peak Hour for Entire Intersection Begins at 07:15 AM																					
07:15 AM	1	280	53	0	334	29	**7**	2	0	38	0	327	2	0	329	18	0	**1**	**1**	20	721
07:30 AM	1	**298**	**58**	0	**357**	**35**	2	**7**	0	**44**	**1**	**422**	3	0	**426**	20	1	1	0	22	**849**
07:45 AM	0	249	32	0	281	16	1	2	0	19	0	389	**8**	0	397	**24**	1	0	0	**25**	722
08:00 AM	**4**	232	24	0	260	21	5	2	0	28	1	333	3	0	337	19	**2**	1	1	23	648
Total Volume	6	1059	167	0	1232	101	15	13	0	129	2	1471	16	0	1489	81	4	3	2	90	2940
% App. Total	0.5	86	13.6	0		78.3	11.6	10.1	0		0.1	98.8	1.1	0		90	4.4	3.3	2.2		
PHF	.375	.888	.720	.000	.863	.721	.536	.464	.000	.733	.500	.871	.500	.000	.874	.844	.500	.750	.500	.900	.866

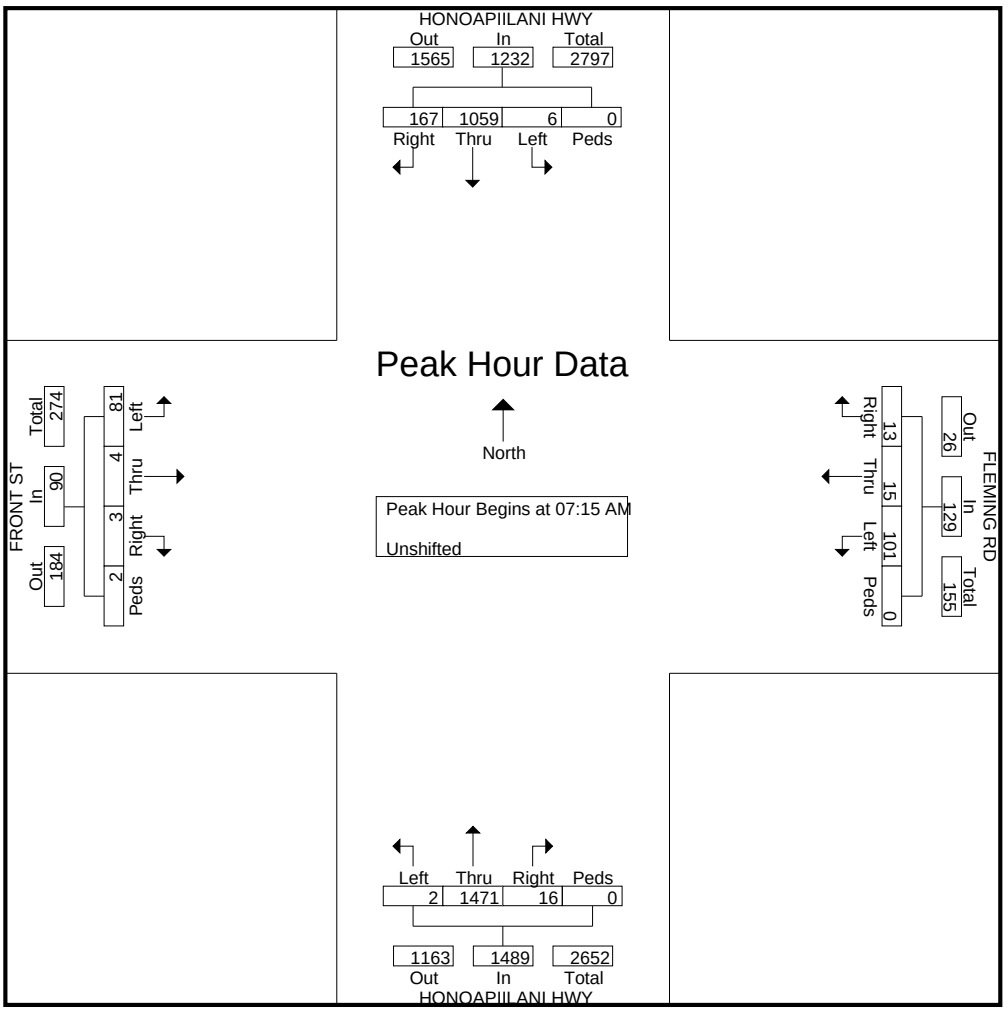

AUSTIN TSUTSUMI & ASSOCIATES

501 Sumner Street, Suite 521
Honolulu, HI 96817-5031
Phone: (808) 533-3646 Fax: (808) 526-1267

File Name : AM_Honoapiilani Hwy-Kapunakea St
Site Code : 00000000
Start Date : 12/7/2016
Page No : 1

Groups Printed- Unshifted

	KAPUNAKEA ST Eastbound				KAPUNAKEA ST Westbound				HONOAPIILANI HWY Northbound				HONOAPIILANI HWY Southbound				
Start Time	Left	Thru	Right	Peds	Left	Thru	Right	Peds	Left	Thru	Right	Peds	Left	Thru	Right	Peds	Int. Total
06:15 AM	8	1	2	0	14	1	7	0	1	199	7	0	0	132	6	1	379
06:30 AM	14	1	4	0	16	3	4	0	3	243	11	0	0	172	9	2	482
06:45 AM	14	1	5	0	24	5	5	0	6	214	6	0	0	199	14	1	494
Total	36	3	11	0	54	9	16	0	10	656	24	0	0	503	29	4	1355
07:00 AM	17	3	9	0	28	7	5	1	5	245	4	0	4	304	13	4	649
07:15 AM	28	6	4	0	51	10	7	0	7	296	16	0	3	290	16	3	737
07:30 AM	21	7	6	0	33	5	14	0	3	386	15	0	2	336	17	4	849
07:45 AM	24	9	6	0	30	5	5	0	5	375	26	0	0	240	16	2	743
Total	90	25	25	0	142	27	31	1	20	1302	61	0	9	1170	62	13	2978
08:00 AM	22	5	3	0	27	3	3	1	8	296	14	0	2	237	13	0	634
Grand Total	148	33	39	0	223	39	50	2	38	2254	99	0	11	1910	104	17	4967
Apprch %	67.3	15	17.7	0	71	12.4	15.9	0.6	1.6	94.3	4.1	0	0.5	93.5	5.1	0.8	
Total %	3	0.7	0.8	0	4.5	0.8	1	0	0.8	45.4	2	0	0.2	38.5	2.1	0.3	

AUSTIN TSUTSUMI & ASSOCIATES

501 Sumner Street, Suite 521
Honolulu, HI 96817-5031
Phone: (808) 533-3646 Fax: (808) 526-1267

File Name : AM_Honoapiilani Hwy-Kapunakea St
Site Code : 00000000
Start Date : 12/7/2016
Page No : 2

	KAPUNAKEA ST Eastbound					KAPUNAKEA ST Westbound					HONOAPIILANI HWY Northbound					HONOAPIILANI HWY Southbound					
Start Time	Left	Thru	Right	Peds	App. Total	Left	Thru	Right	Peds	App. Total	Left	Thru	Right	Peds	App. Total	Left	Thru	Right	Peds	App. Total	Int. Total
Peak Hour Analysis From 07:15 AM to 08:00 AM - Peak 1 of 1																					
Peak Hour for Entire Intersection Begins at 07:15 AM																					
07:15 AM	**28**	6	4	0	38	**51**	**10**	7	0	**68**	7	296	16	0	319	**3**	290	16	3	312	737
07:30 AM	21	7	**6**	0	34	33	5	**14**	0	52	3	**386**	15	0	404	2	**336**	**17**	**4**	**359**	**849**
07:45 AM	24	**9**	6	0	**39**	30	5	5	0	40	5	375	**26**	0	**406**	0	240	16	2	258	743
08:00 AM	22	5	3	0	30	27	3	3	**1**	34	**8**	296	14	0	318	2	237	13	0	252	634
Total Volume	95	27	19	0	141	141	23	29	1	194	23	1353	71	0	1447	7	1103	62	9	1181	2963
% App. Total	67.4	19.1	13.5	0		72.7	11.9	14.9	0.5		1.6	93.5	4.9	0		0.6	93.4	5.2	0.8		
PHF	.848	.750	.792	.000	.904	.691	.575	.518	.250	.713	.719	.876	.683	.000	.891	.583	.821	.912	.563	.822	.872

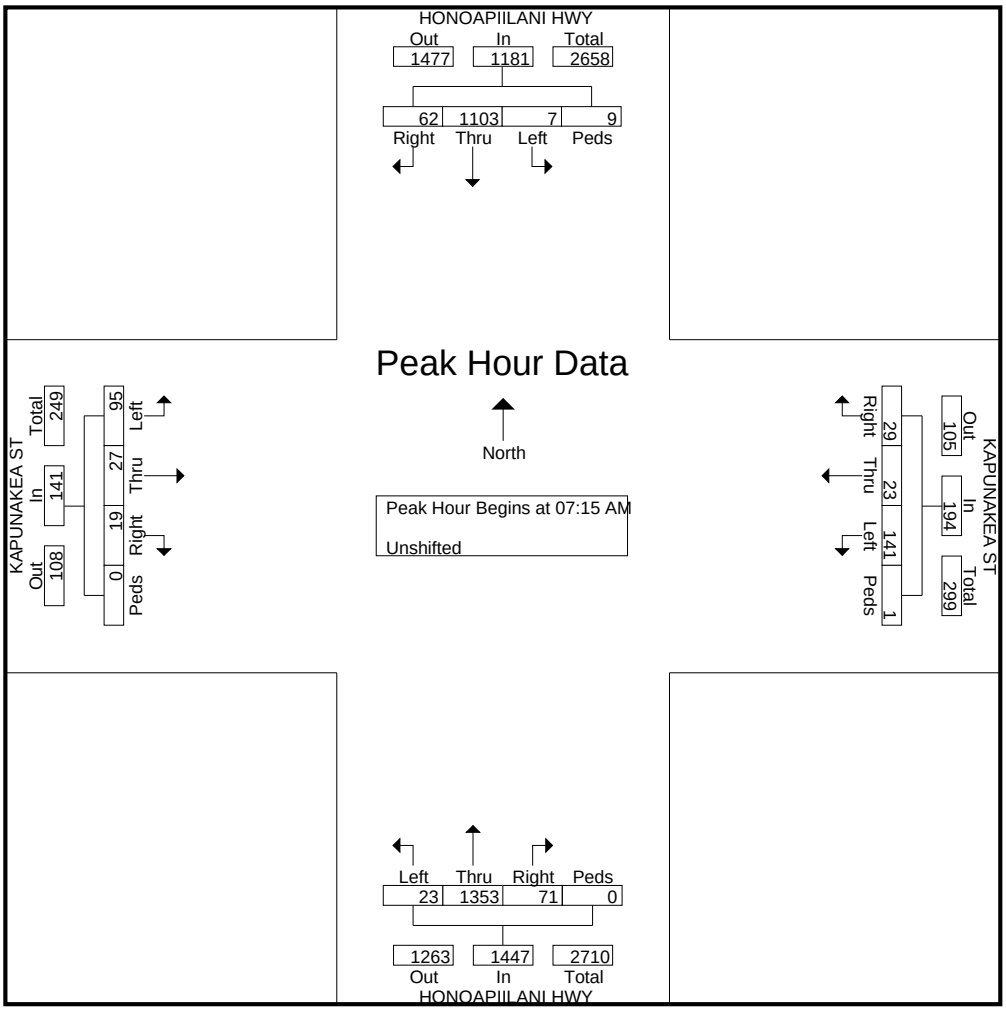

AUSTIN TSUTSUMI & ASSOCIATES

501 Sumner Street, Suite 521
Honolulu, HI 96817-5031
Phone: (808) 533-3646 Fax: (808) 526-1267

File Name : AM_Honoapiilani Hwy-Keawe St
Site Code : 00000000
Start Date : 12/7/2016
Page No : 1

Groups Printed- Unshifted

	KEAWE ST Eastbound				KEAWE ST Westbound				HONOAPIILANI HWY Northbound				HONOAPIILANI HWY Southbound				
Start Time	Left	Thru	Right	Peds	Left	Thru	Right	Peds	Left	Thru	Right	Peds	Left	Thru	Right	Peds	Int. Total
06:15 AM	0	2	1	0	17	2	47	1	6	149	19	0	24	115	1	2	386
06:30 AM	2	2	9	2	7	5	56	1	2	192	24	0	33	146	3	0	484
06:45 AM	2	10	6	0	13	5	53	0	5	169	25	0	52	170	3	0	513
Total	4	14	16	2	37	12	156	2	13	510	68	0	109	431	7	2	1383
07:00 AM	1	12	6	2	20	6	68	2	6	191	36	2	84	247	3	4	690
07:15 AM	4	43	9	0	27	11	114	0	5	190	36	3	88	229	9	0	768
07:30 AM	3	21	9	0	28	12	110	3	13	288	46	2	74	301	3	3	916
07:45 AM	5	17	14	2	32	23	130	0	6	255	53	2	58	210	3	3	813
Total	13	93	38	4	107	52	422	5	30	924	171	9	304	987	18	10	3187
08:00 AM	1	15	13	2	28	14	76	1	12	235	29	2	55	200	2	0	685
Grand Total	18	122	67	8	172	78	654	8	55	1669	268	11	468	1618	27	12	5255
Apprch %	8.4	56.7	31.2	3.7	18.9	8.6	71.7	0.9	2.7	83.3	13.4	0.5	22	76.1	1.3	0.6	
Total %	0.3	2.3	1.3	0.2	3.3	1.5	12.4	0.2	1	31.8	5.1	0.2	8.9	30.8	0.5	0.2	

AUSTIN TSUTSUMI & ASSOCIATES

501 Sumner Street, Suite 521
Honolulu, HI 96817-5031
Phone: (808) 533-3646 Fax: (808) 526-1267

File Name : AM_Honoapiilani Hwy-Keawe St
Site Code : 00000000
Start Date : 12/7/2016
Page No : 2

	KEAWE ST Eastbound					KEAWE ST Westbound					HONOAPIILANI HWY Northbound					HONOAPIILANI HWY Southbound					
Start Time	Left	Thru	Right	Peds	App. Total	Left	Thru	Right	Peds	App. Total	Left	Thru	Right	Peds	App. Total	Left	Thru	Right	Peds	App. Total	Int. Total
Peak Hour Analysis From 07:15 AM to 08:00 AM - Peak 1 of 1																					
Peak Hour for Entire Intersection Begins at 07:15 AM																					
07:15 AM	4	**43**	9	0	**56**	27	11	114	0	152	5	190	36	**3**	234	**88**	229	**9**	0	326	768
07:30 AM	3	21	9	0	33	28	12	110	**3**	153	**13**	**288**	46	2	**349**	74	**301**	3	**3**	**381**	**916**
07:45 AM	**5**	17	**14**	**2**	38	**32**	**23**	**130**	0	**185**	6	255	**53**	2	316	58	210	3	3	274	813
08:00 AM	1	15	13	2	31	28	14	76	1	119	12	235	29	2	278	55	200	2	0	257	685
Total Volume	13	96	45	4	158	115	60	430	4	609	36	968	164	9	1177	275	940	17	6	1238	3182
% App. Total	8.2	60.8	28.5	2.5		18.9	9.9	70.6	0.7		3.1	82.2	13.9	0.8		22.2	75.9	1.4	0.5		
PHF	.650	.558	.804	.500	.705	.898	.652	.827	.333	.823	.692	.840	.774	.750	.843	.781	.781	.472	.500	.812	.868

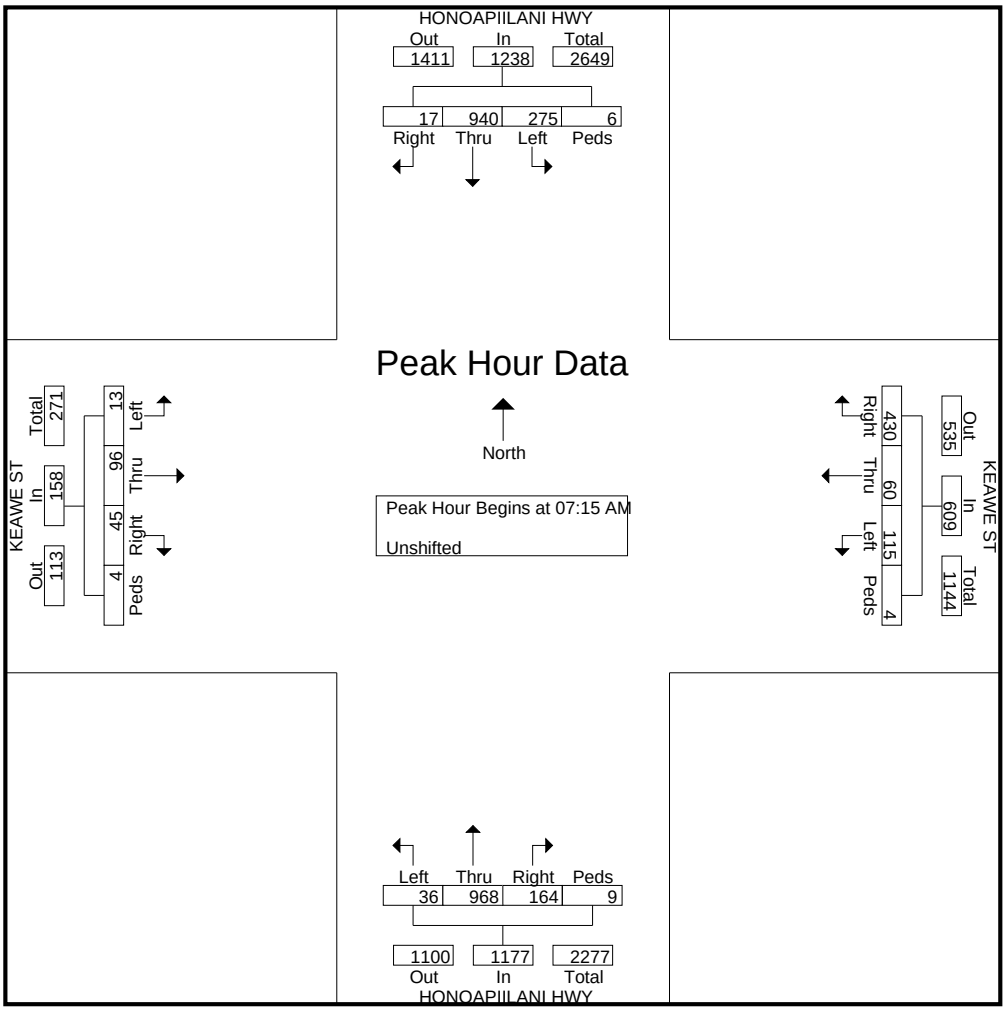

AUSTIN TSUTSUMI & ASSOCIATES

501 Sumner Street, Suite 521
Honolulu, HI 96817-5031
Phone: (808) 533-3646 Fax: (808) 526-1267

File Name : PM_Honoapiilani Hwy - Napilihau St
Site Code : 00000000
Start Date : 11/30/2016
Page No : 1

Groups Printed- Unshifted

	HONOAPIILANI HWY Southbound				NAPILIHAU ST Westbound				HONOAPIILANI HWY Northbound				NAPILIHAU ST Eastbound				
Start Time	**Left**	**Thru**	**Right**	**Peds**	**Left**	**Thru**	**Right**	**Peds**	**Left**	**Thru**	**Right**	**Peds**	**Left**	**Thru**	**Right**	**Peds**	**Int. Total**
03:00 PM	0	72	8	0	9	1	0	0	65	60	6	0	11	2	78	1	313
03:15 PM	1	59	14	0	8	1	0	0	75	43	3	0	6	0	54	0	264
03:30 PM	2	59	10	1	6	2	0	0	74	62	3	0	20	4	71	0	314
03:45 PM	0	56	15	0	10	5	2	0	69	48	6	0	16	3	85	0	315
Total	3	246	47	1	33	9	2	0	283	213	18	0	53	9	288	1	1206
04:00 PM	0	75	38	0	11	4	0	0	83	52	4	0	9	1	96	0	373
04:15 PM	2	68	6	0	7	3	0	0	102	58	9	0	13	2	81	0	351
04:30 PM	0	53	13	0	8	2	1	0	98	36	3	0	15	2	83	0	314
04:45 PM	5	48	24	0	10	5	4	0	108	53	5	0	18	2	83	1	366
Total	7	244	81	0	36	14	5	0	391	199	21	0	55	7	343	1	1404
Grand Total	10	490	128	1	69	23	7	0	674	412	39	0	108	16	631	2	2610
Apprch %	1.6	77.9	20.3	0.2	69.7	23.2	7.1	0	59.9	36.6	3.5	0	14.3	2.1	83.4	0.3	
Total %	0.4	18.8	4.9	0	2.6	0.9	0.3	0	25.8	15.8	1.5	0	4.1	0.6	24.2	0.1	

AUSTIN TSUTSUMI & ASSOCIATES

501 Sumner Street, Suite 521
Honolulu, HI 96817-5031
Phone: (808) 533-3646 Fax: (808) 526-1267

File Name : PM_Honoapiilani Hwy - Napilihau St
Site Code : 00000000
Start Date : 11/30/2016
Page No : 2

	HONOAPIILANI HWY Southbound					NAPILIHAU ST Westbound					HONOAPIILANI HWY Northbound					NAPILIHAU ST Eastbound					
Start Time	**Left**	**Thru**	**Right**	**Peds**	**App. Total**	**Left**	**Thru**	**Right**	**Peds**	**App. Total**	**Left**	**Thru**	**Right**	**Peds**	**App. Total**	**Left**	**Thru**	**Right**	**Peds**	**App. Total**	**Int. Total**
Peak Hour Analysis From 03:45 PM to 04:30 PM - Peak 1 of 1																					
Peak Hour for Entire Intersection Begins at 03:45 PM																					
03:45 PM	0	56	15	0	71	10	**5**	**2**	0	**17**	69	48	6	0	123	**16**	**3**	85	0	104	315
04:00 PM	0	**75**	**38**	0	**113**	**11**	4	0	0	15	83	52	4	0	139	9	1	**96**	0	**106**	**373**
04:15 PM	**2**	68	6	0	76	7	3	0	0	10	**102**	**58**	**9**	0	**169**	13	2	81	0	96	351
04:30 PM	0	53	13	0	66	8	2	1	0	11	98	36	3	0	137	15	2	83	0	100	314
Total Volume	2	252	72	0	326	36	14	3	0	53	352	194	22	0	568	53	8	345	0	406	1353
% App. Total	0.6	77.3	22.1	0		67.9	26.4	5.7	0		62	34.2	3.9	0		13.1	2	85	0		
PHF	.250	.840	.474	.000	.721	.818	.700	.375	.000	.779	.863	.836	.611	.000	.840	.828	.667	.898	.000	.958	.907

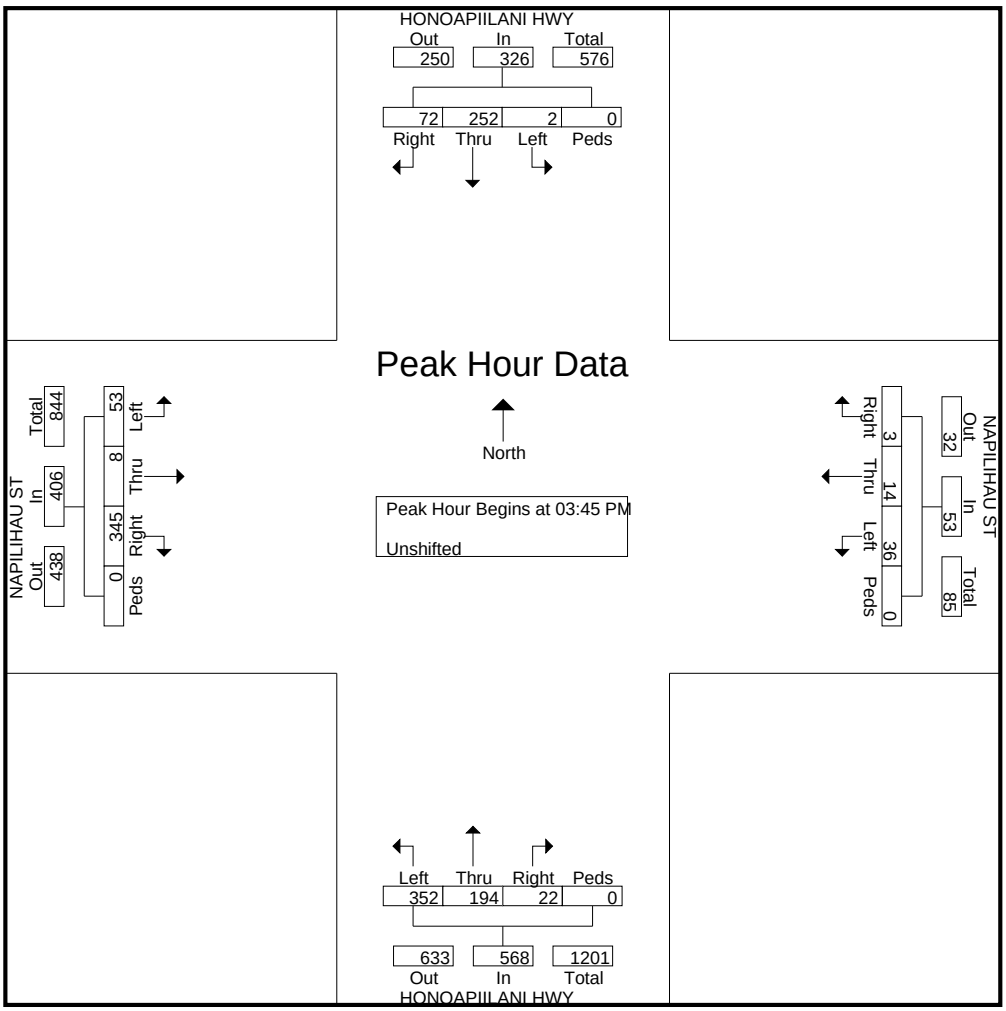

AUSTIN TSUTSUMI & ASSOCIATES

501 Sumner Street, Suite 521
Honolulu, HI 96817-5031
Phone: (808) 533-3646 Fax: (808) 526-1267

File Name : PM_Honoapiilani Hwy - Hoohui Rd
Site Code : 00000000
Start Date : 11/30/2016
Page No : 1

Groups Printed- Unshifted

	HONOAPIILANI HWY Southbound				HOOHUI RD Westbound				HONOAPIILANI HWY Northbound				HOOHUI RD Eastbound				
Start Time	**Left**	**Thru**	**Right**	**Peds**	**Left**	**Thru**	**Right**	**Peds**	**Left**	**Thru**	**Right**	**Peds**	**Left**	**Thru**	**Right**	**Peds**	**Int. Total**
03:00 PM	3	94	15	0	9	3	1	0	32	86	7	0	7	2	26	0	285
03:15 PM	4	111	13	1	6	3	1	0	35	109	12	0	13	6	41	1	356
03:30 PM	2	125	18	1	9	2	2	1	41	122	15	0	16	5	38	0	397
03:45 PM	4	120	22	0	12	7	4	0	52	131	7	0	17	4	31	0	411
Total	13	450	68	2	36	15	8	1	160	448	41	0	53	17	136	1	1449
04:00 PM	6	143	20	0	5	1	0	0	46	112	10	0	14	4	37	0	398
04:15 PM	7	103	14	0	10	1	2	0	41	133	11	0	24	7	27	0	380
04:30 PM	4	130	19	0	14	5	1	4	40	117	12	0	13	3	40	0	402
04:45 PM	8	109	16	1	4	4	3	0	58	125	6	0	18	5	36	0	393
Total	25	485	69	1	33	11	6	4	185	487	39	0	69	19	140	0	1573
Grand Total	38	935	137	3	69	26	14	5	345	935	80	0	122	36	276	1	3022
Apprch %	3.4	84	12.3	0.3	60.5	22.8	12.3	4.4	25.4	68.8	5.9	0	28	8.3	63.4	0.2	
Total %	1.3	30.9	4.5	0.1	2.3	0.9	0.5	0.2	11.4	30.9	2.6	0	4	1.2	9.1	0	

AUSTIN TSUTSUMI & ASSOCIATES

501 Sumner Street, Suite 521
Honolulu, HI 96817-5031
Phone: (808) 533-3646 Fax: (808) 526-1267

File Name : PM_Honoapiilani Hwy - Hoohui Rd
Site Code : 00000000
Start Date : 11/30/2016
Page No : 2

	HONOAPIILANI HWY Southbound					HOOHUI RD Westbound					HONOAPIILANI HWY Northbound					HOOHUI RD Eastbound					
Start Time	**Left**	**Thru**	**Right**	**Peds**	**App. Total**	**Left**	**Thru**	**Right**	**Peds**	**App. Total**	**Left**	**Thru**	**Right**	**Peds**	**App. Total**	**Left**	**Thru**	**Right**	**Peds**	**App. Total**	**Int. Total**
Peak Hour Analysis From 03:45 PM to 04:30 PM - Peak 1 of 1																					
Peak Hour for Entire Intersection Begins at 03:45 PM																					
03:45 PM	4	120	**22**	0	146	12	**7**	**4**	0	23	**52**	131	7	0	**190**	17	4	31	0	52	**411**
04:00 PM	6	**143**	20	0	**169**	5	1	0	0	6	46	112	10	0	168	14	4	37	0	55	398
04:15 PM	**7**	103	14	0	124	10	1	2	0	13	41	**133**	11	0	185	**24**	**7**	27	0	**58**	380
04:30 PM	4	130	19	0	153	**14**	5	1	**4**	**24**	40	117	**12**	0	169	13	3	**40**	0	56	402
Total Volume	21	496	75	0	592	41	14	7	4	66	179	493	40	0	712	68	18	135	0	221	1591
% App. Total	3.5	83.8	12.7	0		62.1	21.2	10.6	6.1		25.1	69.2	5.6	0		30.8	8.1	61.1	0		
PHF	.750	.867	.852	.000	.876	.732	.500	.438	.250	.688	.861	.927	.833	.000	.937	.708	.643	.844	.000	.953	.968

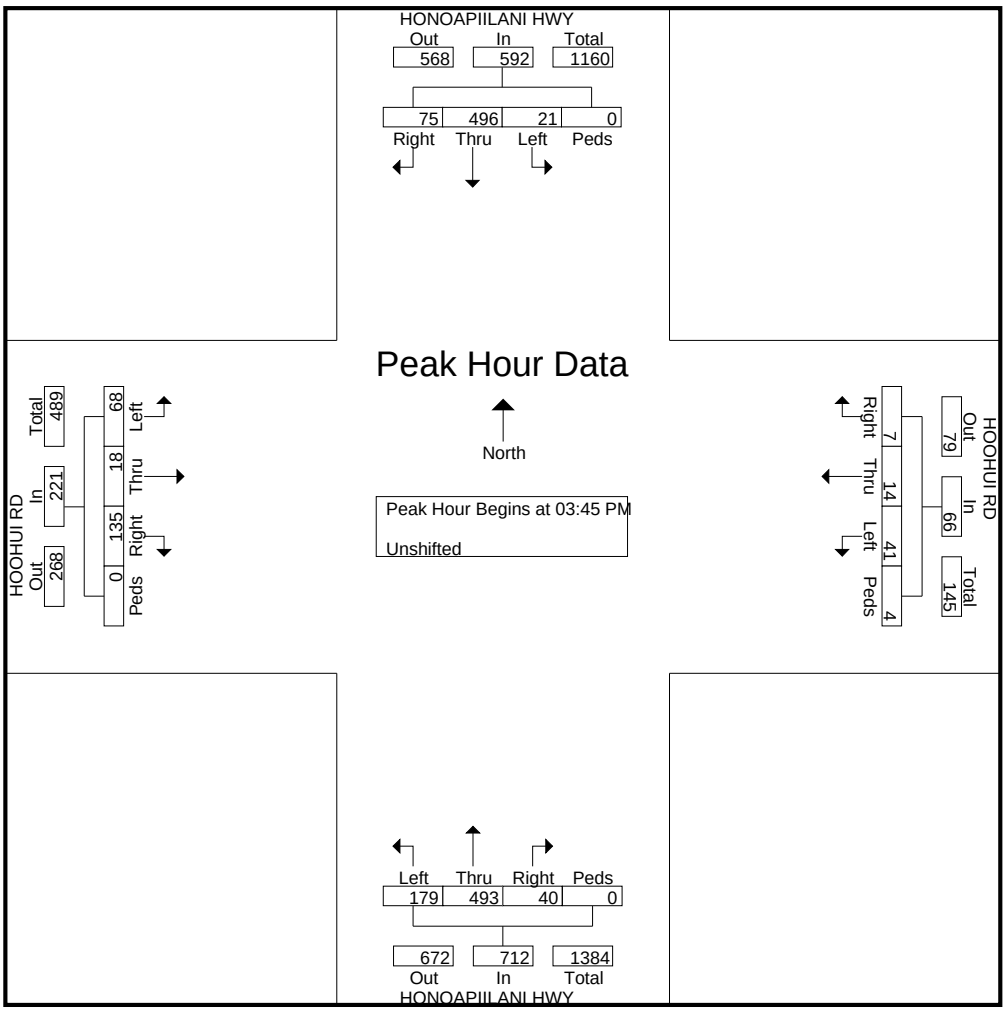

AUSTIN TSUTSUMI & ASSOCIATES

501 Sumner Street, Suite 521
Honolulu, HI 96817-5031
Phone: (808) 533-3646 Fax: (808) 526-1267

File Name : PM_Honoapiilani Hwy - Akahele St
Site Code : 00000000
Start Date : 12/6/2016
Page No : 1

Groups Printed- Unshifted - Bank 1

	HONOAPIILANI HWY Southbound				AKAHELE ST Westbound				HONOAPIILANI HWY Northbound				AKAHELE ST Eastbound				
Start Time	Left	Thru	Right	Peds	Left	Thru	Right	Peds	Left	Thru	Right	Peds	Left	Thru	Right	Peds	Int. Total
03:00 PM	1	199	22	0	2	4	1	0	33	170	2	0	7	2	15	0	458
03:15 PM	0	195	19	0	2	1	1	0	35	187	2	1	9	1	19	1	473
03:30 PM	1	189	19	0	7	0	2	0	35	153	3	1	24	0	21	0	455
03:45 PM	0	151	16	0	1	3	1	0	31	159	2	5	14	0	13	1	397
Total	2	734	76	0	12	8	5	0	134	669	9	7	54	3	68	2	1783
04:00 PM	1	163	25	0	2	0	3	0	52	168	2	0	6	0	19	0	441
04:15 PM	0	144	19	0	1	1	0	0	36	185	2	0	15	2	32	1	438
04:30 PM	0	179	10	1	5	1	2	0	32	191	1	2	18	1	24	0	467
04:45 PM	1	160	10	0	0	0	0	0	34	143	3	3	10	1	28	1	394
Total	2	646	64	1	8	2	5	0	154	687	8	5	49	4	103	2	1740
Grand Total	4	1380	140	1	20	10	10	0	288	1356	17	12	103	7	171	4	3523
Apprch %	0.3	90.5	9.2	0.1	50	25	25	0	17.2	81.1	1	0.7	36.1	2.5	60	1.4	
Total %	0.1	39.2	4	0	0.6	0.3	0.3	0	8.2	38.5	0.5	0.3	2.9	0.2	4.9	0.1	
Unshifted	4	1380	140	1	20	10	10	0	288	1356	17	12	103	7	171	4	3523
% Unshifted	100	100	100	100	100	100	100	0	100	100	100	100	100	100	100	100	100
Bank 1	0	0	0	0	0	0	0	0	0	0	0	0	0	0	0	0	0
% Bank 1	0	0	0	0	0	0	0	0	0	0	0	0	0	0	0	0	0

AUSTIN TSUTSUMI & ASSOCIATES

501 Sumner Street, Suite 521
Honolulu, HI 96817-5031
Phone: (808) 533-3646 Fax: (808) 526-1267

File Name : PM_Honoapiilani Hwy - Akahele St
Site Code : 00000000
Start Date : 12/6/2016
Page No : 2

	HONOAPIILANI HWY Southbound					AKAHELE ST Westbound					HONOAPIILANI HWY Northbound					AKAHELE ST Eastbound					
Start Time	Left	Thru	Right	Peds	App. Total	Left	Thru	Right	Peds	App. Total	Left	Thru	Right	Peds	App. Total	Left	Thru	Right	Peds	App. Total	Int. Total
Peak Hour Analysis From 03:45 PM to 04:30 PM - Peak 1 of 1																					
Peak Hour for Entire Intersection Begins at 03:45 PM																					
03:45 PM	0	151	16	0	167	1	**3**	1	0	5	31	159	**2**	**5**	197	14	0	13	**1**	28	397
04:00 PM	**1**	163	**25**	0	189	2	0	**3**	0	5	**52**	168	2	0	222	6	0	19	0	25	441
04:15 PM	0	144	19	0	163	1	1	0	0	2	36	185	2	0	223	15	**2**	**32**	1	**50**	438
04:30 PM	0	**179**	10	**1**	**190**	**5**	1	2	0	**8**	32	**191**	1	2	**226**	**18**	1	24	0	43	**467**
Total Volume	1	637	70	1	709	9	5	6	0	20	151	703	7	7	868	53	3	88	2	146	1743
% App. Total	0.1	89.8	9.9	0.1		45	25	30	0		17.4	81	0.8	0.8		36.3	2.1	60.3	1.4		
PHF	.250	.890	.700	.250	.933	.450	.417	.500	.000	.625	.726	.920	.875	.350	.960	.736	.375	.688	.500	.730	.933

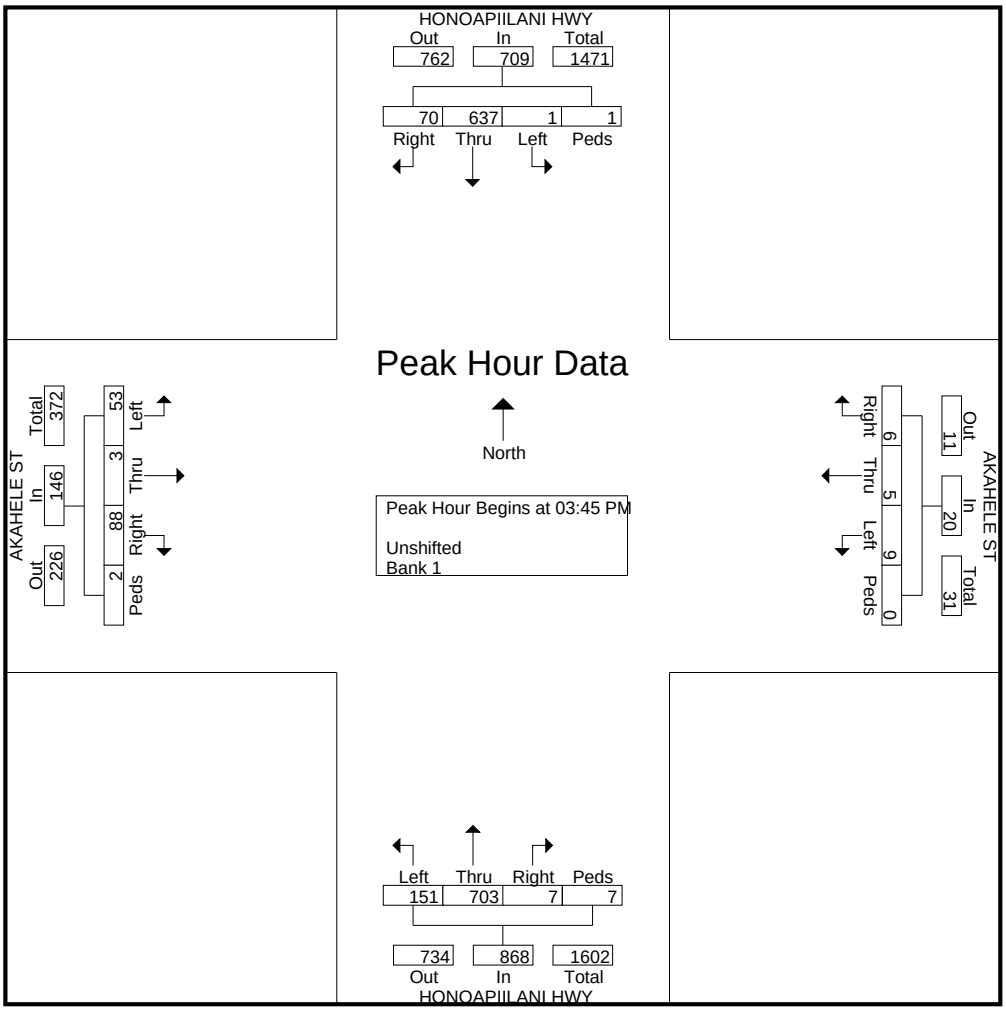

AUSTIN TSUTSUMI & ASSOCIATES

501 Sumner Street, Suite 521
Honolulu, HI 96817-5031
Phone: (808) 533-3646 Fax: (808) 526-1267

File Name : PM_Honoapiilani Hwy - Lower Honoapiilani Rd
Site Code : 00000000
Start Date : 12/6/2016
Page No : 1

Groups Printed- Unshifted

	HONOAPIILANI HWY Southbound				LOWER HONOAPIILANI R Westbound				HONOAPIILANI HWY Northbound				LOWER HONOAPIILANI R Eastbound				
Start Time	**Left**	**Thru**	**Right**	**Peds**	**Left**	**Thru**	**Right**	**Peds**	**Left**	**Thru**	**Right**	**Peds**	**Left**	**Thru**	**Right**	**Peds**	**Int. Total**
03:00 PM	0	223	18	1	17	3	1	1	105	181	2	0	13	4	154	3	726
03:15 PM	1	62	0	0	29	1	1	0	130	187	7	0	12	1	137	0	568
03:30 PM	1	159	4	0	107	3	0	0	158	170	6	0	13	3	192	0	816
03:45 PM	0	157	0	0	36	1	2	0	166	187	0	0	5	2	88	0	644
Total	2	601	22	1	189	8	4	1	559	725	15	0	43	10	571	3	2754
04:00 PM	0	171	0	1	19	2	1	0	102	211	1	0	29	0	168	0	705
04:15 PM	1	187	0	0	12	6	1	2	152	181	3	0	14	0	127	0	686
04:30 PM	0	193	16	0	8	1	3	0	128	178	2	0	22	2	163	0	716
04:45 PM	0	122	17	0	8	2	4	0	135	172	3	0	14	0	137	3	617
Total	1	673	33	1	47	11	9	2	517	742	9	0	79	2	595	3	2724
Grand Total	3	1274	55	2	236	19	13	3	1076	1467	24	0	122	12	1166	6	5478
Apprch %	0.2	95.5	4.1	0.1	87.1	7	4.8	1.1	41.9	57.1	0.9	0	9.3	0.9	89.3	0.5	
Total %	0.1	23.3	1	0	4.3	0.3	0.2	0.1	19.6	26.8	0.4	0	2.2	0.2	21.3	0.1	

AUSTIN TSUTSUMI & ASSOCIATES

501 Sumner Street, Suite 521
Honolulu, HI 96817-5031
Phone: (808) 533-3646 Fax: (808) 526-1267

File Name : PM_Honoapiilani Hwy - Lower Honoapiilani Rd
Site Code : 00000000
Start Date : 12/6/2016
Page No : 2

	HONOAPIILANI HWY Southbound					LOWER HONOAPIILANI R Westbound					HONOAPIILANI HWY Northbound					LOWER HONOAPIILANI R Eastbound					
Start Time	**Left**	**Thru**	**Right**	**Peds**	**App. Total**	**Left**	**Thru**	**Right**	**Peds**	**App. Total**	**Left**	**Thru**	**Right**	**Peds**	**App. Total**	**Left**	**Thru**	**Right**	**Peds**	**App. Total**	**Int. Total**
Peak Hour Analysis From 03:45 PM to 04:30 PM - Peak 1 of 1																					
Peak Hour for Entire Intersection Begins at 03:45 PM																					
03:45 PM	0	157	0	0	157	**36**	1	2	0	**39**	**166**	187	0	0	**353**	5	**2**	88	0	95	644
04:00 PM	0	171	0	**1**	172	19	2	1	0	22	102	**211**	1	0	314	**29**	0	**168**	0	**197**	705
04:15 PM	**1**	187	0	0	188	12	**6**	1	**2**	21	152	181	**3**	0	336	14	0	127	0	141	686
04:30 PM	0	**193**	**16**	0	**209**	8	1	**3**	0	12	128	178	2	0	308	22	2	163	0	187	**716**
Total Volume	1	708	16	1	726	75	10	7	2	94	548	757	6	0	1311	70	4	546	0	620	2751
% App. Total	0.1	97.5	2.2	0.1		79.8	10.6	7.4	2.1		41.8	57.7	0.5	0		11.3	0.6	88.1	0		
PHF	.250	.917	.250	.250	.868	.521	.417	.583	.250	.603	.825	.897	.500	.000	.928	.603	.500	.813	.000	.787	.961

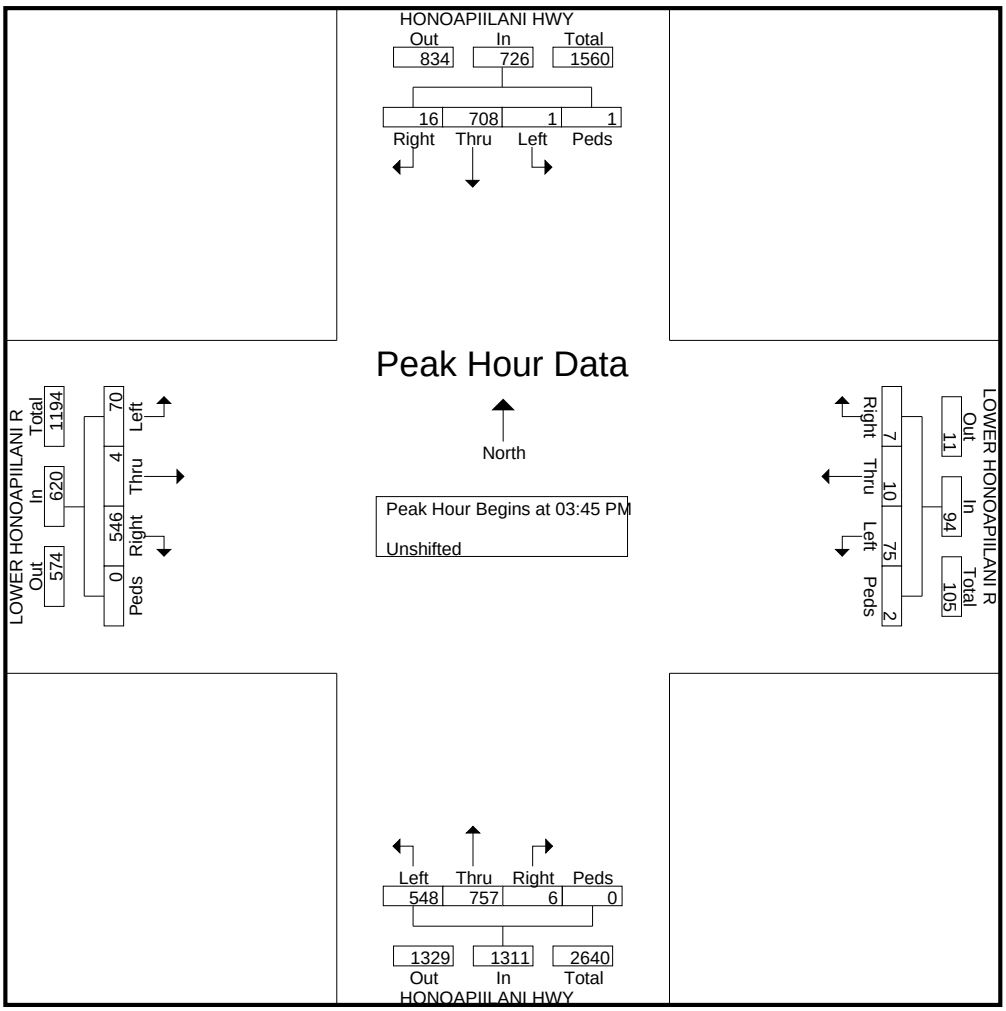

AUSTIN TSUTSUMI & ASSOCIATES

501 Sumner Street, Suite 521
Honolulu, HI 96817-5031
Phone: (808) 533-3646 Fax: (808) 526-1267

File Name : PM_Honoapiilani Hwy - Halawai Dr
Site Code : 00000000
Start Date : 12/6/2016
Page No : 1

Groups Printed- Unshifted

	HONOAPIILANI HWY Southbound				HALAWAI DR Westbound				HONOAPIILANI HWY Northbound				HALAWAI DR Eastbound				
Start Time	**Left**	**Thru**	**Right**	**Peds**	**Left**	**Thru**	**Right**	**Peds**	**Left**	**Thru**	**Right**	**Peds**	**Left**	**Thru**	**Right**	**Peds**	**Int. Total**
03:00 PM	3	355	20	14	2	0	1	1	26	281	2	0	6	3	13	0	727
03:15 PM	2	322	25	23	5	1	2	0	15	319	1	0	18	2	13	0	748
03:30 PM	4	401	24	10	7	1	4	2	14	285	1	0	16	1	19	0	789
03:45 PM	1	315	7	5	5	0	1	3	17	319	0	0	4	1	16	0	694
Total	10	1393	76	52	19	2	8	6	72	1204	4	0	44	7	61	0	2958
04:00 PM	5	345	8	2	4	0	1	1	15	319	4	0	7	0	11	0	722
04:15 PM	2	317	12	4	1	0	1	1	16	324	4	0	6	0	9	0	697
04:30 PM	0	355	6	4	4	0	1	2	20	310	2	0	3	0	27	0	734
04:45 PM	4	303	7	10	5	0	3	0	10	285	4	0	7	0	21	0	659
Total	11	1320	33	20	14	0	6	4	61	1238	14	0	23	0	68	0	2812
Grand Total	21	2713	109	72	33	2	14	10	133	2442	18	0	67	7	129	0	5770
Apprch %	0.7	93.1	3.7	2.5	55.9	3.4	23.7	16.9	5.1	94.2	0.7	0	33	3.4	63.5	0	
Total %	0.4	47	1.9	1.2	0.6	0	0.2	0.2	2.3	42.3	0.3	0	1.2	0.1	2.2	0	

AUSTIN TSUTSUMI & ASSOCIATES

501 Sumner Street, Suite 521
Honolulu, HI 96817-5031
Phone: (808) 533-3646 Fax: (808) 526-1267

File Name : PM_Honoapiilani Hwy - Halawai Dr
Site Code : 00000000
Start Date : 12/6/2016
Page No : 2

	HONOAPIILANI HWY Southbound					HALAWAI DR Westbound					HONOAPIILANI HWY Northbound					HALAWAI DR Eastbound					
Start Time	**Left**	**Thru**	**Right**	**Peds**	**App. Total**	**Left**	**Thru**	**Right**	**Peds**	**App. Total**	**Left**	**Thru**	**Right**	**Peds**	**App. Total**	**Left**	**Thru**	**Right**	**Peds**	**App. Total**	**Int. Total**
Peak Hour Analysis From 03:45 PM to 04:30 PM - Peak 1 of 1																					
Peak Hour for Entire Intersection Begins at 03:45 PM																					
03:45 PM	1	315	7	**5**	328	**5**	0	**1**	**3**	**9**	17	319	0	0	336	4	**1**	16	0	21	694
04:00 PM	**5**	345	8	2	360	4	0	1	1	6	15	319	**4**	0	338	**7**	0	11	0	18	722
04:15 PM	2	317	**12**	4	335	1	0	1	1	3	16	**324**	4	0	**344**	6	0	9	0	15	697
04:30 PM	0	**355**	6	4	**365**	4	0	1	2	7	**20**	310	2	0	332	3	0	**27**	0	**30**	**734**
Total Volume	8	1332	33	15	1388	14	0	4	7	25	68	1272	10	0	1350	20	1	63	0	84	2847
% App. Total	0.6	96	2.4	1.1		56	0	16	28		5	94.2	0.7	0		23.8	1.2	75	0		
PHF	.400	.938	.688	.750	.951	.700	.000	1.00	.583	.694	.850	.981	.625	.000	.981	.714	.250	.583	.000	.700	.970

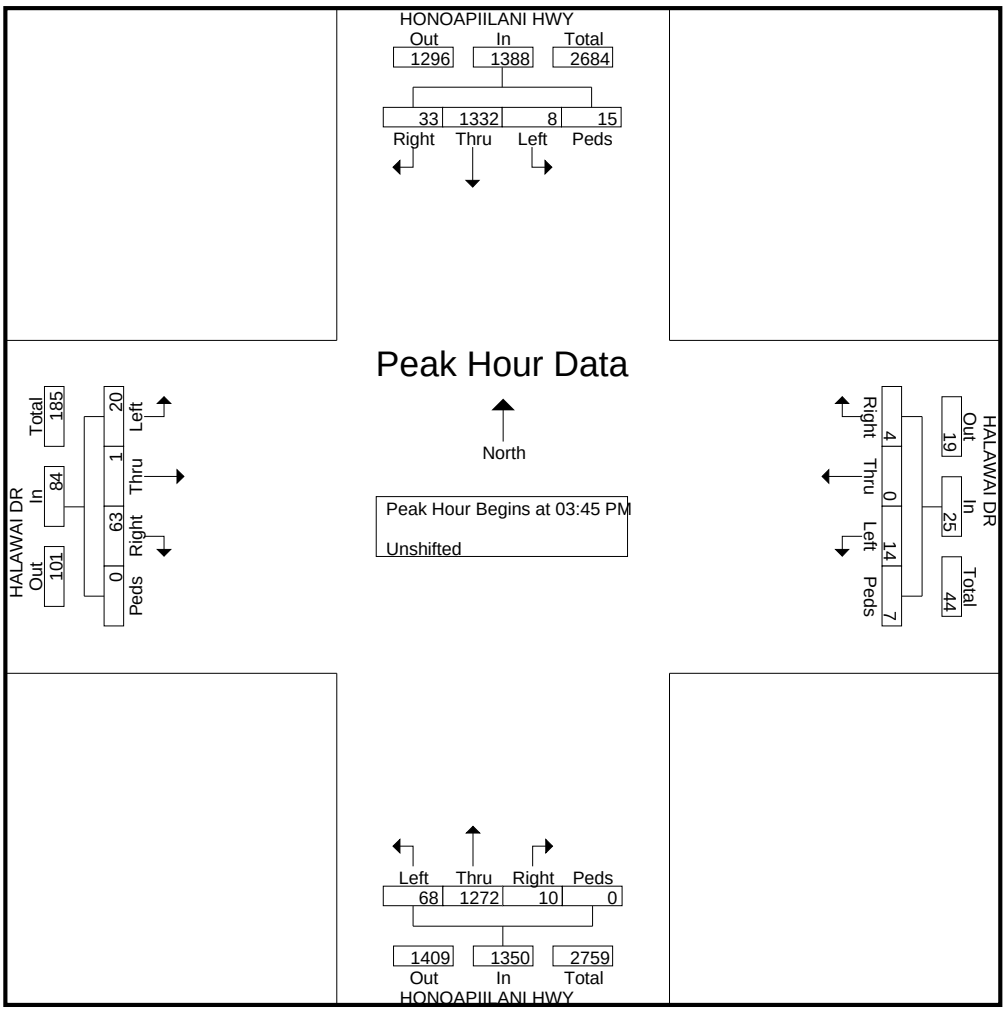

AUSTIN TSUTSUMI & ASSOCIATES

501 Sumner Street, Suite 521
Honolulu, HI 96817-5031
Phone: (808) 533-3646 Fax: (808) 526-1267

File Name : PM_Honoapiilani Hwy - Puukolii Rd
Site Code : 00000000
Start Date : 12/6/2016
Page No : 1

Groups Printed- Unshifted

	HONOAPIILANI HWY Southbound				PUUKOLII RD Westbound				HONOAPIILANI HWY Northbound				PUUKOLII RD Eastbound				
Start Time	**Left**	**Thru**	**Right**	**Peds**	**Left**	**Thru**	**Right**	**Peds**	**Left**	**Thru**	**Right**	**Peds**	**Left**	**Thru**	**Right**	**Peds**	**Int. Total**
03:00 PM	9	340	11	0	7	2	6	0	25	285	16	0	18	2	40	0	761
03:15 PM	13	360	12	0	8	1	8	0	22	308	17	0	12	0	22	0	783
03:30 PM	9	412	16	0	16	0	5	0	24	275	18	0	22	0	26	0	823
03:45 PM	10	332	15	1	18	1	9	0	28	298	13	0	16	1	22	0	764
Total	41	1444	54	1	49	4	28	0	99	1166	64	0	68	3	110	0	3131
04:00 PM	8	312	23	3	17	2	12	1	23	301	14	0	14	1	50	0	781
04:15 PM	9	338	12	0	16	0	11	0	36	323	16	0	15	2	46	0	824
04:30 PM	2	343	33	2	12	1	8	0	34	286	12	0	19	1	46	0	799
04:45 PM	5	296	13	0	8	1	6	1	16	255	4	0	22	2	24	0	653
Total	24	1289	81	5	53	4	37	2	109	1165	46	0	70	6	166	0	3057
Grand Total	65	2733	135	6	102	8	65	2	208	2331	110	0	138	9	276	0	6188
Apprch %	2.2	93	4.6	0.2	57.6	4.5	36.7	1.1	7.9	88	4.2	0	32.6	2.1	65.2	0	
Total %	1.1	44.2	2.2	0.1	1.6	0.1	1.1	0	3.4	37.7	1.8	0	2.2	0.1	4.5	0	

AUSTIN TSUTSUMI & ASSOCIATES

501 Sumner Street, Suite 521
Honolulu, HI 96817-5031
Phone: (808) 533-3646 Fax: (808) 526-1267

File Name : PM_Honoapiilani Hwy - Puukolii Rd
Site Code : 00000000
Start Date : 12/6/2016
Page No : 2

	HONOAPIILANI HWY Southbound					PUUKOLII RD Westbound					HONOAPIILANI HWY Northbound					PUUKOLII RD Eastbound					
Start Time	**Left**	**Thru**	**Right**	**Peds**	**App. Total**	**Left**	**Thru**	**Right**	**Peds**	**App. Total**	**Left**	**Thru**	**Right**	**Peds**	**App. Total**	**Left**	**Thru**	**Right**	**Peds**	**App. Total**	**Int. Total**
Peak Hour Analysis From 03:45 PM to 04:30 PM - Peak 1 of 1																					
Peak Hour for Entire Intersection Begins at 03:45 PM																					
03:45 PM	**10**	332	15	1	358	**18**	1	9	0	28	28	298	13	0	339	16	1	22	0	39	764
04:00 PM	8	312	23	**3**	346	17	**2**	**12**	**1**	**32**	23	301	14	0	338	14	1	**50**	0	65	781
04:15 PM	9	338	12	0	359	16	0	11	0	27	**36**	**323**	**16**	0	**375**	15	**2**	46	0	63	**824**
04:30 PM	2	**343**	**33**	2	**380**	12	1	8	0	21	34	286	12	0	332	**19**	1	46	0	**66**	799
Total Volume	29	1325	83	6	1443	63	4	40	1	108	121	1208	55	0	1384	64	5	164	0	233	3168
% App. Total	2	91.8	5.8	0.4		58.3	3.7	37	0.9		8.7	87.3	4	0		27.5	2.1	70.4	0		
PHF	.725	.966	.629	.500	.949	.875	.500	.833	.250	.844	.840	.935	.859	.000	.923	.842	.625	.820	.000	.883	.961

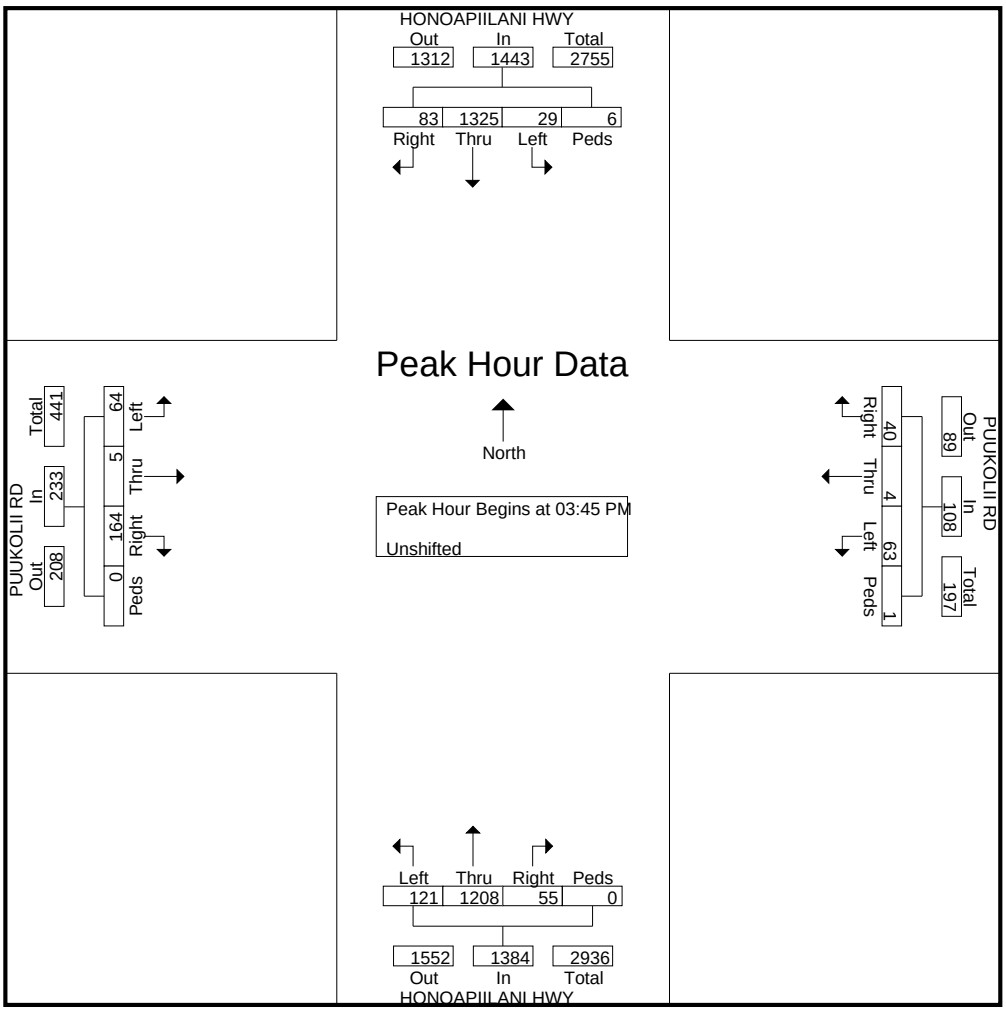

AUSTIN TSUTSUMI & ASSOCIATES

501 Sumner Street, Suite 521
Honolulu, HI 96817-5031
Phone: (808) 533-3646 Fax: (808) 526-1267

File Name : PM_Honoapiilani Hwy - Kaanapali Pkwy
Site Code : 00000000
Start Date : 12/6/2016
Page No : 1

Groups Printed- Unshifted

	HONOAPIILANI HWY Southbound				KAANAPALI PKWY Westbound				HONOAPIILANI HWY Northbound				KAANAPALI PKWY Eastbound				
Start Time	**Left**	**Thru**	**Right**	**Peds**	**Left**	**Thru**	**Right**	**Peds**	**Left**	**Thru**	**Right**	**Peds**	**Left**	**Thru**	**Right**	**Peds**	**Int. Total**
03:00 PM	7	323	37	0	3	1	2	0	102	268	2	0	26	23	98	0	892
03:15 PM	6	321	15	0	4	0	2	1	137	351	2	0	68	1	121	0	1029
03:30 PM	7	363	32	0	5	2	1	0	95	264	3	0	51	0	115	0	938
03:45 PM	15	331	34	3	6	0	1	3	100	340	1	0	55	2	107	0	998
Total	35	1338	118	3	18	3	6	4	434	1223	8	0	200	26	441	0	3857
04:00 PM	15	364	32	0	1	0	1	0	101	302	2	0	71	0	185	0	1074
04:15 PM	12	345	34	1	4	0	1	1	86	316	1	0	72	0	169	0	1042
04:30 PM	6	376	20	0	2	0	1	0	87	282	2	0	67	0	136	0	979
04:45 PM	8	322	30	0	3	0	3	0	80	243	3	0	50	0	115	0	857
Total	41	1407	116	1	10	0	6	1	354	1143	8	0	260	0	605	0	3952
Grand Total	76	2745	234	4	28	3	12	5	788	2366	16	0	460	26	1046	0	7809
Apprch %	2.5	89.7	7.6	0.1	58.3	6.2	25	10.4	24.9	74.6	0.5	0	30	1.7	68.3	0	
Total %	1	35.2	3	0.1	0.4	0	0.2	0.1	10.1	30.3	0.2	0	5.9	0.3	13.4	0	

AUSTIN TSUTSUMI & ASSOCIATES

501 Sumner Street, Suite 521
Honolulu, HI 96817-5031
Phone: (808) 533-3646 Fax: (808) 526-1267

File Name : PM_Honoapiilani Hwy - Kaanapali Pkwy
Site Code : 00000000
Start Date : 12/6/2016
Page No : 2

	HONOAPIILANI HWY Southbound					KAANAPALI PKWY Westbound					HONOAPIILANI HWY Northbound					KAANAPALI PKWY Eastbound					
Start Time	**Left**	**Thru**	**Right**	**Peds**	**App. Total**	**Left**	**Thru**	**Right**	**Peds**	**App. Total**	**Left**	**Thru**	**Right**	**Peds**	**App. Total**	**Left**	**Thru**	**Right**	**Peds**	**App. Total**	**Int. Total**
Peak Hour Analysis From 03:45 PM to 04:30 PM - Peak 1 of 1																					
Peak Hour for Entire Intersection Begins at 03:45 PM																					
03:45 PM	**15**	331	**34**	**3**	383	**6**	0	**1**	**3**	**10**	100	**340**	1	0	**441**	55	**2**	107	0	164	998
04:00 PM	15	364	32	0	**411**	1	0	1	0	2	**101**	302	**2**	0	405	71	0	**185**	0	**256**	**1074**
04:15 PM	12	345	34	1	392	4	0	1	1	6	86	316	1	0	403	**72**	0	169	0	241	1042
04:30 PM	6	**376**	20	0	402	2	0	1	0	3	87	282	2	0	371	67	0	136	0	203	979
Total Volume	48	1416	120	4	1588	13	0	4	4	21	374	1240	6	0	1620	265	2	597	0	864	4093
% App. Total	3	89.2	7.6	0.3		61.9	0	19	19		23.1	76.5	0.4	0		30.7	0.2	69.1	0		
PHF	.800	.941	.882	.333	.966	.542	.000	1.00	.333	.525	.926	.912	.750	.000	.918	.920	.250	.807	.000	.844	.953

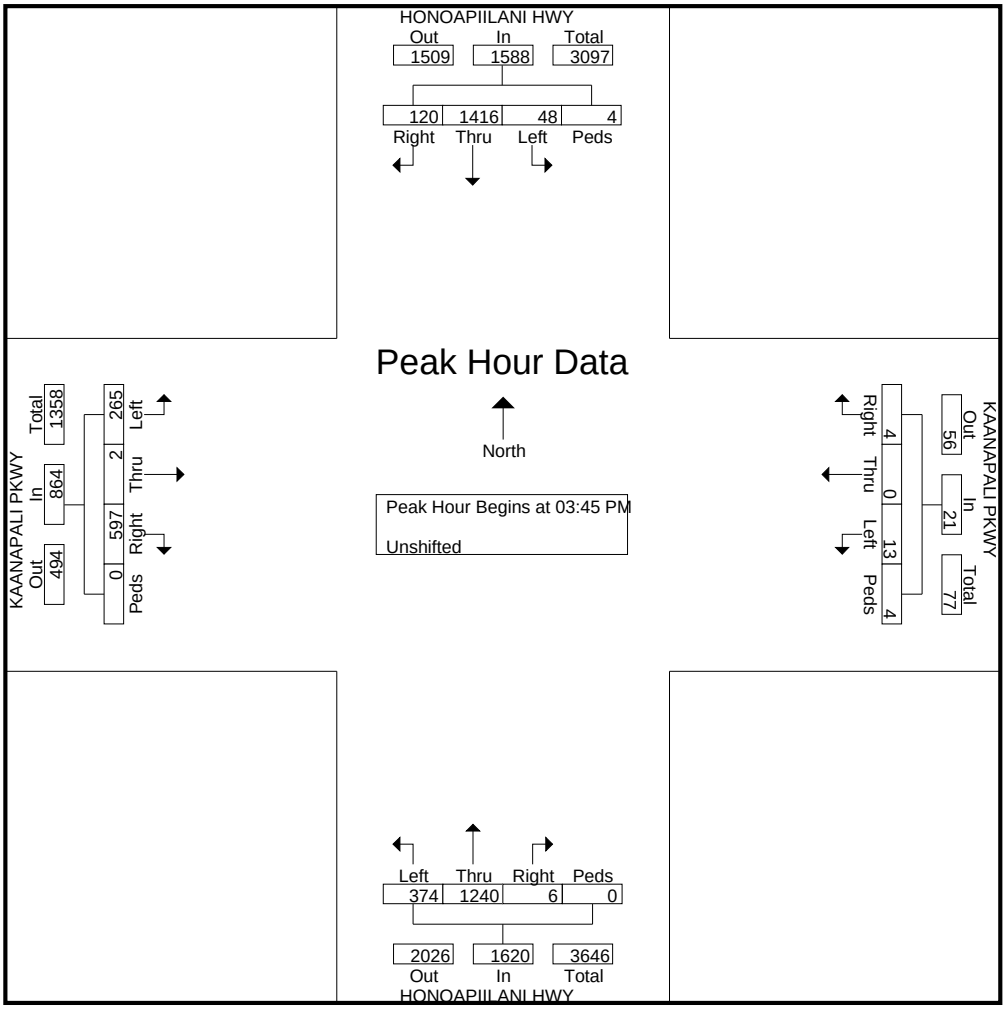

AUSTIN TSUTSUMI & ASSOCIATES

501 Sumner Street, Suite 521
Honolulu, HI 96817-5031
Phone: (808) 533-3646 Fax: (808) 526-1267

File Name : PM_Honoapiilani Hwy - Leialii Pkwy
Site Code : 00000000
Start Date : 12/6/2016
Page No : 1

Groups Printed- Unshifted

	HONOAPIILANI HWY Southbound				LEIALII PKWY Westbound				HONOAPIILANI HWY Northbound				LEIALII PKWY Eastbound				
Start Time	**Left**	**Thru**	**Right**	**Peds**	**Left**	**Thru**	**Right**	**Peds**	**Left**	**Thru**	**Right**	**Peds**	**Left**	**Thru**	**Right**	**Peds**	**Int. Total**
03:00 PM	23	429	2	1	19	0	13	1	2	401	27	0	1	0	1	0	920
03:15 PM	16	425	3	3	31	0	20	3	0	378	24	0	2	0	2	0	907
03:30 PM	22	483	0	1	29	0	13	1	0	387	23	0	0	0	0	0	959
03:45 PM	15	441	2	0	20	0	14	0	2	420	21	0	2	0	0	0	937
Total	76	1778	7	5	99	0	60	5	4	1586	95	0	5	0	3	0	3723
04:00 PM	23	490	1	0	20	0	18	0	2	414	22	0	3	0	1	0	994
04:15 PM	22	521	1	0	22	1	7	0	4	355	24	0	0	0	2	0	959
04:30 PM	17	501	0	0	23	1	14	0	1	374	21	0	2	0	1	0	955
04:45 PM	15	435	0	1	20	0	10	1	1	327	20	0	2	0	2	0	834
Total	77	1947	2	1	85	2	49	1	8	1470	87	0	7	0	6	0	3742
Grand Total	153	3725	9	6	184	2	109	6	12	3056	182	0	12	0	9	0	7465
Apprch %	3.9	95.7	0.2	0.2	61.1	0.7	36.2	2	0.4	94	5.6	0	57.1	0	42.9	0	
Total %	2	49.9	0.1	0.1	2.5	0	1.5	0.1	0.2	40.9	2.4	0	0.2	0	0.1	0	

AUSTIN TSUTSUMI & ASSOCIATES

501 Sumner Street, Suite 521
Honolulu, HI 96817-5031
Phone: (808) 533-3646 Fax: (808) 526-1267

File Name : PM_Honoapiilani Hwy - Leialii Pkwy
Site Code : 00000000
Start Date : 12/6/2016
Page No : 2

	HONOAPIILANI HWY Southbound					LEIALII PKWY Westbound					HONOAPIILANI HWY Northbound					LEIALII PKWY Eastbound					
Start Time	**Left**	**Thru**	**Right**	**Peds**	**App. Total**	**Left**	**Thru**	**Right**	**Peds**	**App. Total**	**Left**	**Thru**	**Right**	**Peds**	**App. Total**	**Left**	**Thru**	**Right**	**Peds**	**App. Total**	**Int. Total**
Peak Hour Analysis From 03:45 PM to 04:30 PM - Peak 1 of 1																					
Peak Hour for Entire Intersection Begins at 03:45 PM																					
03:45 PM	15	441	**2**	0	458	20	0	14	0	34	2	**420**	21	0	**443**	2	0	0	0	2	937
04:00 PM	**23**	490	1	0	514	20	0	**18**	0	**38**	2	414	22	0	438	**3**	0	1	0	**4**	**994**
04:15 PM	22	**521**	1	0	**544**	22	**1**	7	0	30	**4**	355	**24**	0	383	0	0	**2**	0	2	959
04:30 PM	17	501	0	0	518	**23**	1	14	0	38	1	374	21	0	396	2	0	1	0	3	955
Total Volume	77	1953	4	0	2034	85	2	53	0	140	9	1563	88	0	1660	7	0	4	0	11	3845
% App. Total	3.8	96	0.2	0		60.7	1.4	37.9	0		0.5	94.2	5.3	0		63.6	0	36.4	0		
PHF	.837	.937	.500	.000	.935	.924	.500	.736	.000	.921	.563	.930	.917	.000	.937	.583	.000	.500	.000	.688	.967

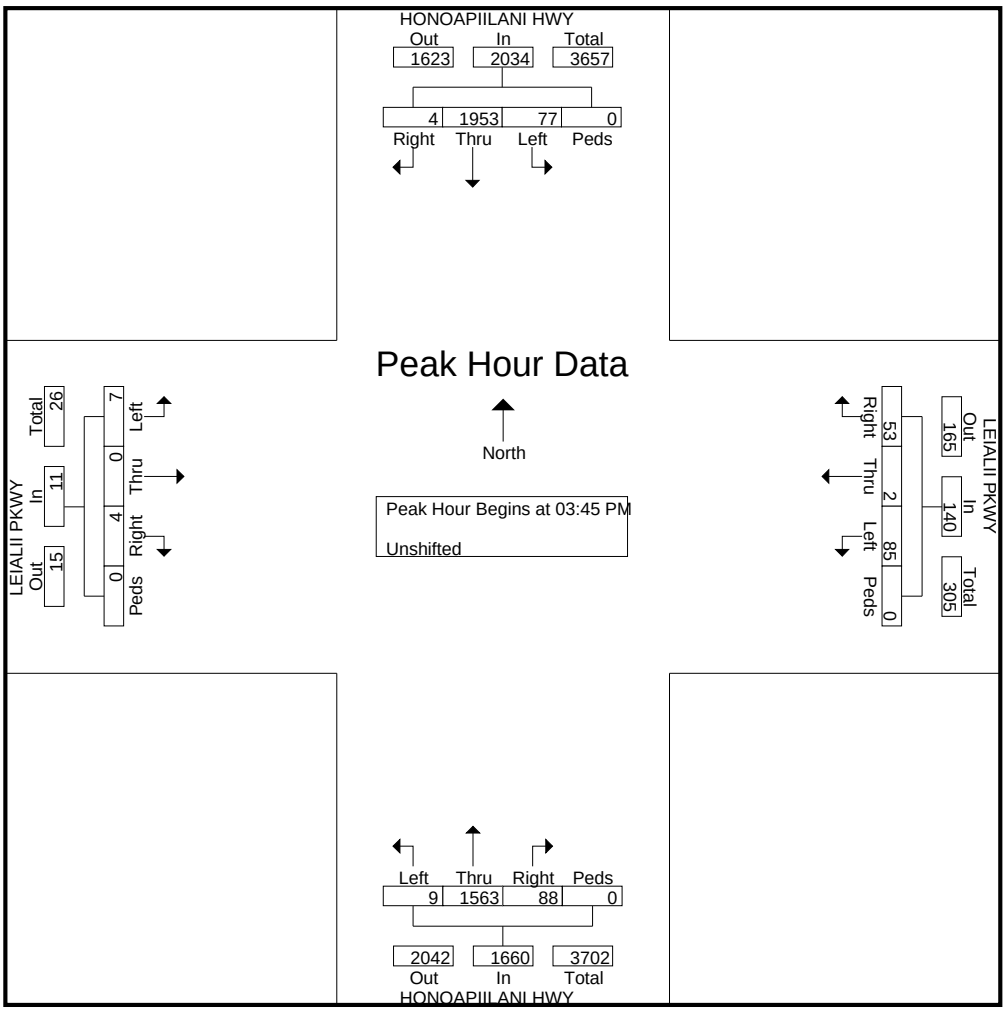

AUSTIN TSUTSUMI & ASSOCIATES

501 Sumner Street, Suite 521
Honolulu, HI 96817-5031
Phone: (808) 533-3646 Fax: (808) 526-1267

File Name : PM_Honoapiilani Hwy - Front St
Site Code : 00000000
Start Date : 12/6/2016
Page No : 1

Groups Printed- Unshifted

	HONOAPIILANI HWY Southbound				FRONT ST Westbound				HONOAPIILANI HWY Northbound				FRONT ST Eastbound				
Start Time	**Left**	**Thru**	**Right**	**Peds**	**Left**	**Thru**	**Right**	**Peds**	**Left**	**Thru**	**Right**	**Peds**	**Left**	**Thru**	**Right**	**Peds**	**Int. Total**
03:00 PM	0	340	58	0	27	2	1	0	0	381	7	0	51	1	0	0	868
03:15 PM	1	371	56	0	14	2	1	0	3	395	3	0	32	1	2	0	881
03:30 PM	2	412	51	0	18	3	1	0	1	394	2	0	47	2	1	0	934
03:45 PM	0	388	74	0	9	1	1	0	2	368	3	0	43	5	4	0	898
Total	3	1511	239	0	68	8	4	0	6	1538	15	0	173	9	7	0	3581
04:00 PM	1	391	62	0	7	1	0	0	0	428	5	0	37	1	3	0	936
04:15 PM	0	450	76	0	24	1	2	0	0	363	5	0	44	3	1	0	969
04:30 PM	1	417	81	0	19	2	4	1	3	345	7	0	36	2	0	0	918
04:45 PM	2	353	86	0	15	3	3	0	7	324	5	0	27	0	0	0	825
Total	4	1611	305	0	65	7	9	1	10	1460	22	0	144	6	4	0	3648
Grand Total	7	3122	544	0	133	15	13	1	16	2998	37	0	317	15	11	0	7229
Apprch %	0.2	85	14.8	0	82.1	9.3	8	0.6	0.5	98.3	1.2	0	92.4	4.4	3.2	0	
Total %	0.1	43.2	7.5	0	1.8	0.2	0.2	0	0.2	41.5	0.5	0	4.4	0.2	0.2	0	

AUSTIN TSUTSUMI & ASSOCIATES

501 Sumner Street, Suite 521
Honolulu, HI 96817-5031
Phone: (808) 533-3646 Fax: (808) 526-1267

File Name : PM_Honoapiilani Hwy - Front St
Site Code : 00000000
Start Date : 12/6/2016
Page No : 2

	HONOAPIILANI HWY Southbound					FRONT ST Westbound					HONOAPIILANI HWY Northbound					FRONT ST Eastbound					
Start Time	**Left**	**Thru**	**Right**	**Peds**	**App. Total**	**Left**	**Thru**	**Right**	**Peds**	**App. Total**	**Left**	**Thru**	**Right**	**Peds**	**App. Total**	**Left**	**Thru**	**Right**	**Peds**	**App. Total**	**Int. Total**
Peak Hour Analysis From 03:45 PM to 04:30 PM - Peak 1 of 1																					
Peak Hour for Entire Intersection Begins at 03:45 PM																					
03:45 PM	0	388	74	0	462	9	1	1	0	11	2	368	3	0	373	43	**5**	**4**	0	**52**	898
04:00 PM	**1**	391	62	0	454	7	1	0	0	8	0	**428**	5	0	**433**	37	1	3	0	41	936
04:15 PM	0	**450**	76	0	**526**	**24**	1	2	0	**27**	0	363	5	0	368	**44**	3	1	0	48	**969**
04:30 PM	1	417	**81**	0	499	19	**2**	**4**	**1**	26	**3**	345	**7**	0	355	36	2	0	0	38	918
Total Volume	2	1646	293	0	1941	59	5	7	1	72	5	1504	20	0	1529	160	11	8	0	179	3721
% App. Total	0.1	84.8	15.1	0		81.9	6.9	9.7	1.4		0.3	98.4	1.3	0		89.4	6.1	4.5	0		
PHF	.500	.914	.904	.000	.923	.615	.625	.438	.250	.667	.417	.879	.714	.000	.883	.909	.550	.500	.000	.861	.960

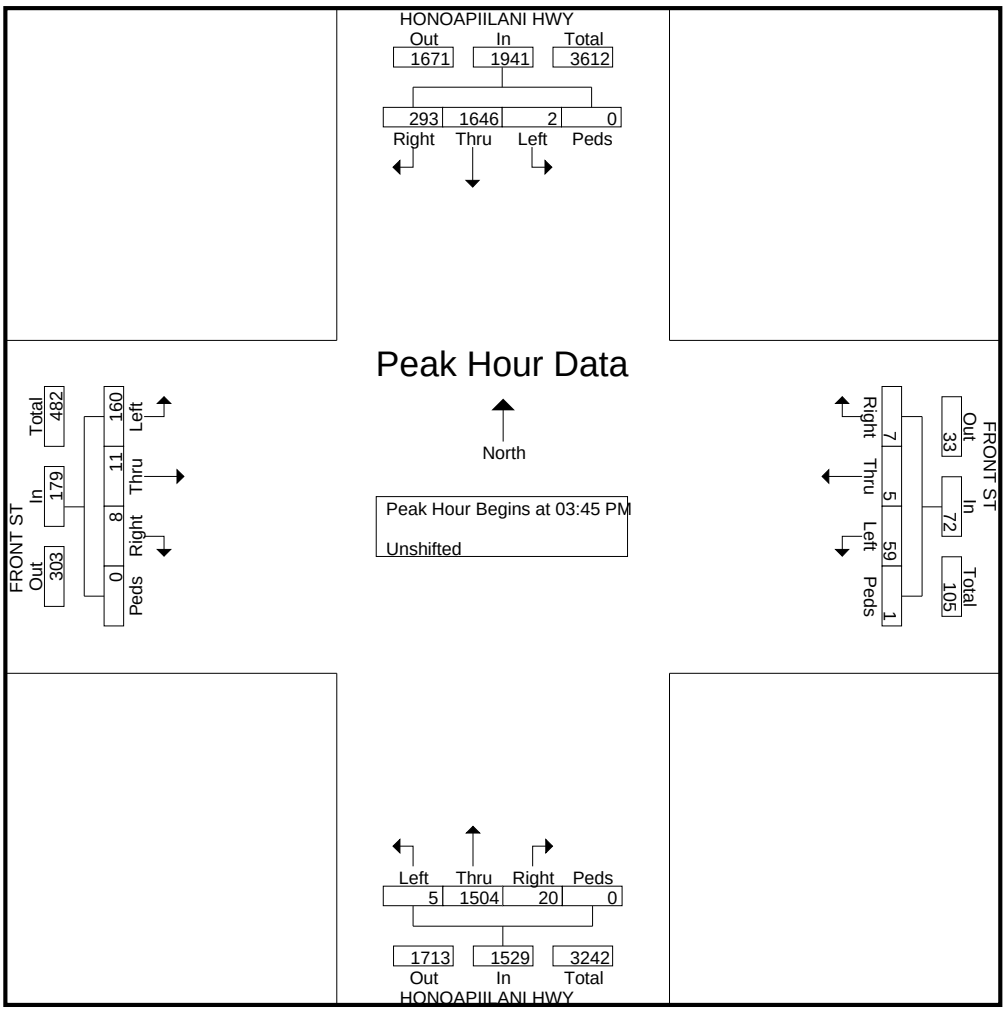

AUSTIN TSUTSUMI & ASSOCIATES

501 Sumner Street, Suite 521
Honolulu, HI 96817-5031
Phone: (808) 533-3646 Fax: (808) 526-1267

File Name : PM_Honoapiilani Hwy-Kapunakea St
Site Code : 00000000
Start Date : 12/6/2016
Page No : 1

Groups Printed- Unshifted

	KAPUNAKEA ST Eastbound				KAPUNAKEA ST Westbound				HONOAPIILANI HWY Northbound				HONOAPIILANI HWY Southbound				
Start Time	Left	Thru	Right	Peds	Left	Thru	Right	Peds	Left	Thru	Right	Peds	Left	Thru	Right	Peds	Int. Total
03:00 PM	44	7	12	0	30	6	5	0	8	351	27	0	1	358	24	5	878
03:15 PM	35	9	13	1	21	4	3	0	10	334	25	0	6	404	18	2	885
03:30 PM	37	4	15	1	32	6	2	0	12	345	28	0	3	354	36	5	880
03:45 PM	28	8	9	1	21	8	6	0	16	361	28	0	3	405	29	0	923
Total	144	28	49	3	104	24	16	0	46	1391	108	0	13	1521	107	12	3566
04:00 PM	36	12	10	0	26	3	3	1	8	357	26	0	7	357	29	3	878
04:15 PM	36	8	11	1	17	5	2	1	13	313	16	0	9	398	39	8	877
04:30 PM	38	7	14	2	27	7	6	0	14	321	33	0	4	436	39	5	953
04:45 PM	31	4	11	0	25	8	1	0	13	312	21	0	4	361	34	0	825
Total	141	31	46	3	95	23	12	2	48	1303	96	0	24	1552	141	16	3533
Grand Total	285	59	95	6	199	47	28	2	94	2694	204	0	37	3073	248	28	7099
Apprch %	64	13.3	21.3	1.3	72.1	17	10.1	0.7	3.1	90	6.8	0	1.1	90.8	7.3	0.8	
Total %	4	0.8	1.3	0.1	2.8	0.7	0.4	0	1.3	37.9	2.9	0	0.5	43.3	3.5	0.4	

AUSTIN TSUTSUMI & ASSOCIATES

501 Sumner Street, Suite 521
Honolulu, HI 96817-5031
Phone: (808) 533-3646 Fax: (808) 526-1267

File Name : PM_Honoapiilani Hwy-Kapunakea St
Site Code : 00000000
Start Date : 12/6/2016
Page No : 2

	KAPUNAKEA ST Eastbound					KAPUNAKEA ST Westbound					HONOAPIILANI HWY Northbound					HONOAPIILANI HWY Southbound					
Start Time	Left	Thru	Right	Peds	App. Total	Left	Thru	Right	Peds	App. Total	Left	Thru	Right	Peds	App. Total	Left	Thru	Right	Peds	App. Total	Int. Total
Peak Hour Analysis From 03:45 PM to 04:30 PM - Peak 1 of 1																					
Peak Hour for Entire Intersection Begins at 03:45 PM																					
03:45 PM	28	8	9	1	46	21	**8**	**6**	0	35	**16**	**361**	28	0	**405**	3	405	29	0	437	923
04:00 PM	36	**12**	10	0	58	26	3	3	**1**	33	8	357	26	0	391	7	357	29	3	396	878
04:15 PM	36	8	11	1	56	17	5	2	1	25	13	313	16	0	342	**9**	398	**39**	**8**	454	877
04:30 PM	**38**	7	**14**	**2**	**61**	**27**	7	6	0	**40**	14	321	**33**	0	368	4	**436**	39	5	**484**	**953**
Total Volume	138	35	44	4	221	91	23	17	2	133	51	1352	103	0	1506	23	1596	136	16	1771	3631
% App. Total	62.4	15.8	19.9	1.8		68.4	17.3	12.8	1.5		3.4	89.8	6.8	0		1.3	90.1	7.7	0.9		
PHF	.908	.729	.786	.500	.906	.843	.719	.708	.500	.831	.797	.936	.780	.000	.930	.639	.915	.872	.500	.915	.953

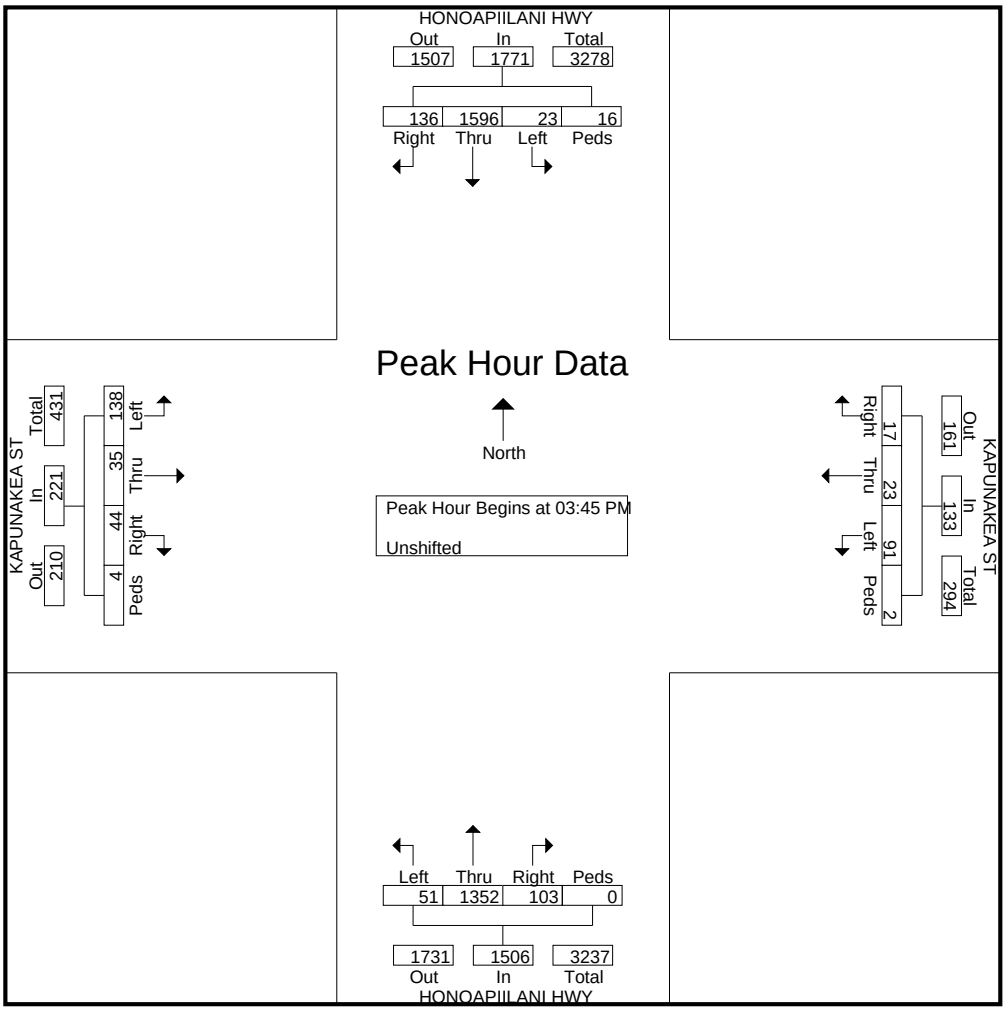

AUSTIN TSUTSUMI & ASSOCIATES

501 Sumner Street, Suite 521
Honolulu, HI 96817-5031
Phone: (808) 533-3646 Fax: (808) 526-1267

File Name : PM_Honoapiilani Hwy-Keawe St
Site Code : 00000000
Start Date : 12/6/2016
Page No : 1

Groups Printed- Unshifted

	KEAWE ST Eastbound				KEAWE ST Westbound				HONOAPIILANI HWY Northbound				HONOAPIILANI HWY Southbound				
Start Time	Left	Thru	Right	Peds	Left	Thru	Right	Peds	Left	Thru	Right	Peds	Left	Thru	Right	Peds	Int. Total
03:00 PM	10	26	19	1	37	22	116	2	20	251	55	5	77	279	11	1	932
03:15 PM	21	34	21	1	41	17	108	4	22	222	48	3	94	285	15	4	940
03:30 PM	19	34	26	3	39	20	112	1	23	261	58	1	88	282	16	11	994
03:45 PM	9	39	13	1	49	18	90	1	19	301	60	1	107	329	10	1	1048
Total	59	133	79	6	166	77	426	8	84	1035	221	10	366	1175	52	17	3914
04:00 PM	17	47	27	3	41	19	122	0	22	263	61	2	94	271	17	2	1008
04:15 PM	14	42	15	5	33	23	102	3	17	244	80	6	85	309	11	8	997
04:30 PM	14	32	25	1	39	25	106	2	18	240	53	3	95	329	20	7	1009
04:45 PM	6	17	11	0	22	11	55	1	16	137	43	2	61	184	11	0	577
Total	51	138	78	9	135	78	385	6	73	884	237	13	335	1093	59	17	3591
Grand Total	110	271	157	15	301	155	811	14	157	1919	458	23	701	2268	111	34	7505
Apprch %	19.9	49	28.4	2.7	23.5	12.1	63.3	1.1	6.1	75	17.9	0.9	22.5	72.8	3.6	1.1	
Total %	1.5	3.6	2.1	0.2	4	2.1	10.8	0.2	2.1	25.6	6.1	0.3	9.3	30.2	1.5	0.5	

AUSTIN TSUTSUMI & ASSOCIATES

501 Sumner Street, Suite 521
Honolulu, HI 96817-5031
Phone: (808) 533-3646 Fax: (808) 526-1267

File Name : PM_Honoapiilani Hwy-Keawe St
Site Code : 00000000
Start Date : 12/6/2016
Page No : 2

	KEAWE ST Eastbound					KEAWE ST Westbound					HONOAPIILANI HWY Northbound					HONOAPIILANI HWY Southbound					
Start Time	Left	Thru	Right	Peds	App. Total	Left	Thru	Right	Peds	App. Total	Left	Thru	Right	Peds	App. Total	Left	Thru	Right	Peds	App. Total	Int. Total
Peak Hour Analysis From 03:45 PM to 04:30 PM - Peak 1 of 1																					
Peak Hour for Entire Intersection Begins at 03:45 PM																					
03:45 PM	9	39	13	1	62	**49**	18	90	1	158	19	**301**	60	1	**381**	**107**	**329**	10	1	447	**1048**
04:00 PM	**17**	**47**	**27**	3	**94**	41	19	**122**	0	**182**	**22**	263	61	2	348	94	271	17	2	384	1008
04:15 PM	14	42	15	**5**	76	33	23	102	**3**	161	17	244	**80**	**6**	347	85	309	11	**8**	413	997
04:30 PM	14	32	25	1	72	39	**25**	106	2	172	18	240	53	3	314	95	329	**20**	7	**451**	1009
Total Volume	54	160	80	10	304	162	85	420	6	673	76	1048	254	12	1390	381	1238	58	18	1695	4062
% App. Total	17.8	52.6	26.3	3.3		24.1	12.6	62.4	0.9		5.5	75.4	18.3	0.9		22.5	73	3.4	1.1		
PHF	.794	.851	.741	.500	.809	.827	.850	.861	.500	.924	.864	.870	.794	.500	.912	.890	.941	.725	.563	.940	.969

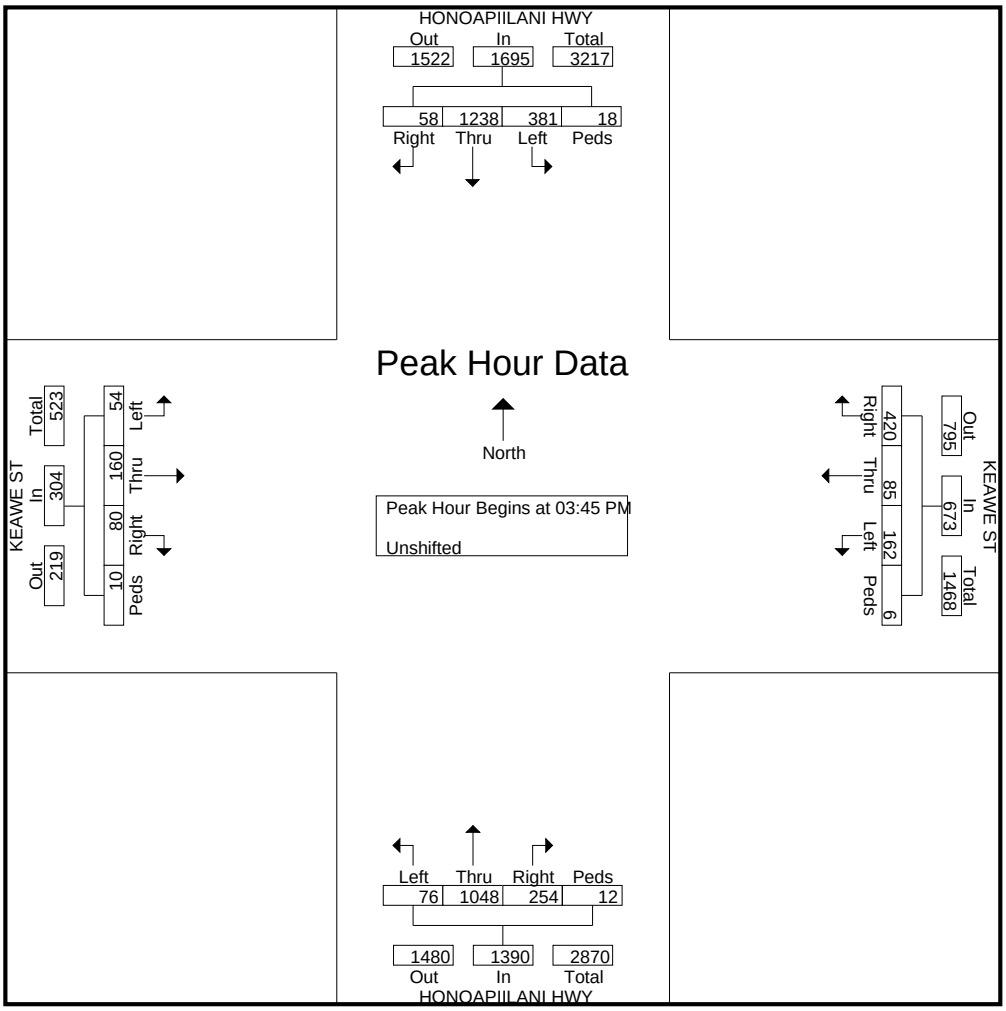

AUSTIN TSUTSUMI & ASSOCIATES

501 Sumner Street, Suite 521
Honolulu, HI 96817-5031
Phone: (808) 533-3646 Fax: (808) 526-1267

File Name : WE_Honoapiilani Hwy - Napilihau St
Site Code : 00000000
Start Date : 1/21/2017
Page No : 1

Groups Printed- Unshifted

	HONOAPIILANI HWY Southbound				NAPILIHAU ST Westbound				HONOAPIILANI HWY Northbound				NAPILIHAU ST Eastbound				
Start Time	**Left**	**Thru**	**Right**	**Peds**	**Left**	**Thru**	**Right**	**Peds**	**Left**	**Thru**	**Right**	**Peds**	**Left**	**Thru**	**Right**	**Peds**	**Int. Total**
11:00 AM	5	67	13	4	10	10	1	0	60	79	14	0	18	4	88	1	374
11:15 AM	2	47	24	1	6	5	2	0	60	75	3	0	18	4	81	2	330
11:30 AM	3	55	13	1	6	9	2	0	52	79	10	0	14	9	78	0	331
11:45 AM	4	63	22	0	6	4	5	1	69	63	3	0	11	5	87	1	344
Total	14	232	72	6	28	28	10	1	241	296	30	0	61	22	334	4	1379
12:00 PM	2	60	22	2	8	6	1	1	78	72	2	0	7	5	73	0	339
12:15 PM	1	73	30	0	5	9	4	0	51	62	4	0	7	3	67	0	316
12:30 PM	0	58	19	0	4	2	1	0	59	62	4	0	13	3	71	0	296
12:45 PM	0	71	13	0	2	4	0	0	70	71	4	0	11	3	56	0	305
Total	3	262	84	2	19	21	6	1	258	267	14	0	38	14	267	0	1256
Grand Total	17	494	156	8	47	49	16	2	499	563	44	0	99	36	601	4	2635
Apprch %	2.5	73.2	23.1	1.2	41.2	43	14	1.8	45.1	50.9	4	0	13.4	4.9	81.2	0.5	
Total %	0.6	18.7	5.9	0.3	1.8	1.9	0.6	0.1	18.9	21.4	1.7	0	3.8	1.4	22.8	0.2	

AUSTIN TSUTSUMI & ASSOCIATES

501 Sumner Street, Suite 521
Honolulu, HI 96817-5031
Phone: (808) 533-3646 Fax: (808) 526-1267

File Name : WE_Honoapiilani Hwy - Napilihau St
Site Code : 00000000
Start Date : 1/21/2017
Page No : 2

	HONOAPIILANI HWY Southbound					NAPILIHAU ST Westbound					HONOAPIILANI HWY Northbound					NAPILIHAU ST Eastbound					
Start Time	**Left**	**Thru**	**Right**	**Peds**	**App. Total**	**Left**	**Thru**	**Right**	**Peds**	**App. Total**	**Left**	**Thru**	**Right**	**Peds**	**App. Total**	**Left**	**Thru**	**Right**	**Peds**	**App. Total**	**Int. Total**
Peak Hour Analysis From 11:30 AM to 12:15 PM - Peak 1 of 1																					
Peak Hour for Entire Intersection Begins at 11:30 AM																					
11:30 AM	3	55	13	1	72	6	**9**	2	0	17	52	**79**	**10**	0	141	**14**	**9**	78	0	101	331
11:45 AM	**4**	63	22	0	89	6	4	**5**	**1**	16	69	63	3	0	135	11	5	**87**	**1**	**104**	**344**
12:00 PM	2	60	22	**2**	86	**8**	6	1	1	16	**78**	72	2	0	**152**	7	5	73	0	85	339
12:15 PM	1	**73**	**30**	0	**104**	5	9	4	0	**18**	51	62	4	0	117	7	3	67	0	77	316
Total Volume	10	251	87	3	351	25	28	12	2	67	250	276	19	0	545	39	22	305	1	367	1330
% App. Total	2.8	71.5	24.8	0.9		37.3	41.8	17.9	3		45.9	50.6	3.5	0		10.6	6	83.1	0.3		
PHF	.625	.860	.725	.375	.844	.781	.778	.600	.500	.931	.801	.873	.475	.000	.896	.696	.611	.876	.250	.882	.967

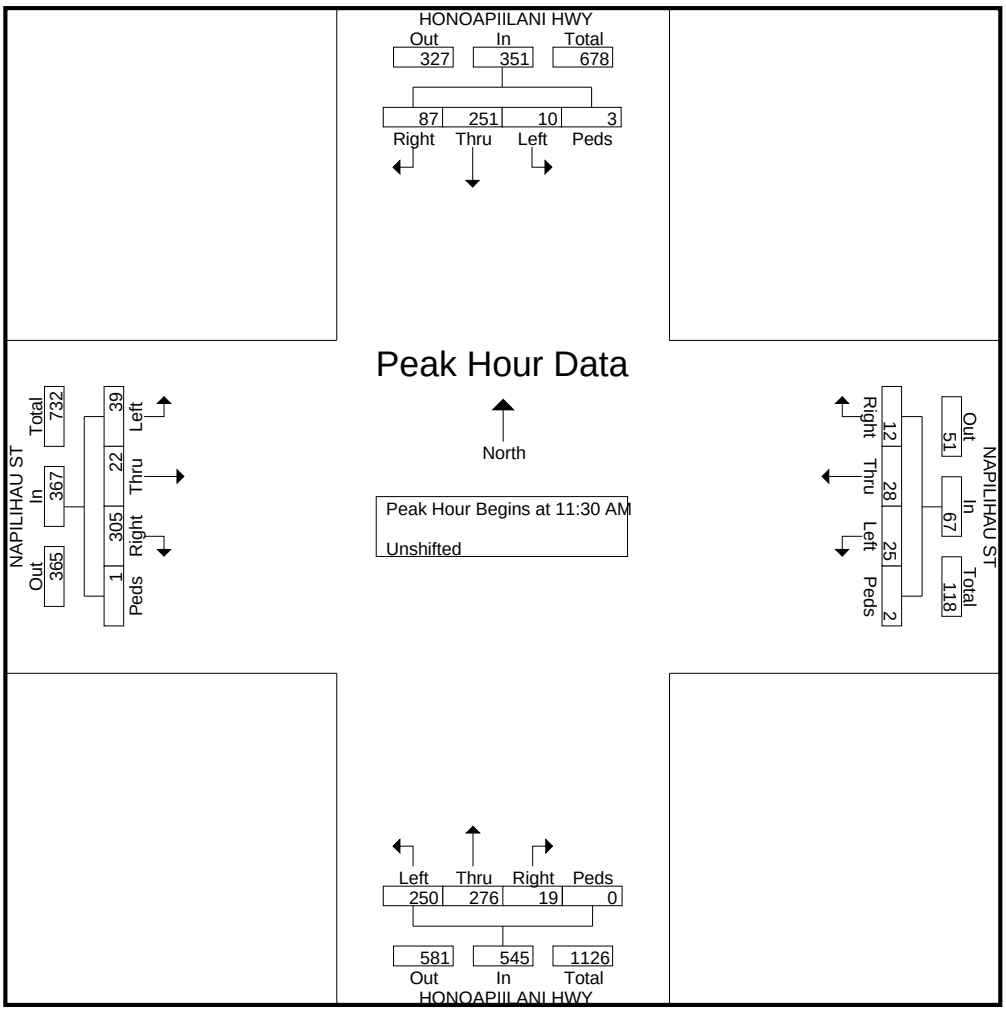

AUSTIN TSUTSUMI & ASSOCIATES

501 Sumner Street, Suite 521
Honolulu, HI 96817-5031
Phone: (808) 533-3646 Fax: (808) 526-1267

File Name : WE_Honoapiilani Hwy - Hoohui Rd
Site Code : 00000000
Start Date : 12/10/2016
Page No : 1

Groups Printed- Unshifted

	HONOAPIILANI HWY Southbound				HOOHUI RD Westbound				HONOAPIILANI HWY Northbound				HOOHUI RD Eastbound				
Start Time	**Left**	**Thru**	**Right**	**Peds**	**Left**	**Thru**	**Right**	**Peds**	**Left**	**Thru**	**Right**	**Peds**	**Left**	**Thru**	**Right**	**Peds**	**Int. Total**
11:00 AM	2	93	13	0	9	5	2	0	18	77	6	0	8	6	35	0	274
11:15 AM	0	101	22	3	5	2	2	2	23	83	2	0	13	2	33	0	293
11:30 AM	3	111	12	3	14	4	0	2	24	80	4	0	10	1	52	0	320
11:45 AM	2	101	15	1	7	0	2	0	25	76	6	0	14	6	38	0	293
Total	7	406	62	7	35	11	6	4	90	316	18	0	45	15	158	0	1180
12:00 PM	4	103	14	0	5	7	3	0	41	108	6	0	12	5	45	0	353
12:15 PM	3	99	14	1	9	4	0	1	28	111	6	0	16	4	41	0	337
12:30 PM	3	95	20	1	7	1	2	0	25	112	6	0	15	1	33	0	321
12:45 PM	7	95	14	0	8	1	4	1	40	120	4	0	11	1	29	0	335
Total	17	392	62	2	29	13	9	2	134	451	22	0	54	11	148	0	1346
Grand Total	24	798	124	9	64	24	15	6	224	767	40	0	99	26	306	0	2526
Apprch %	2.5	83.6	13	0.9	58.7	22	13.8	5.5	21.7	74.4	3.9	0	23	6	71	0	
Total %	1	31.6	4.9	0.4	2.5	1	0.6	0.2	8.9	30.4	1.6	0	3.9	1	12.1	0	

AUSTIN TSUTSUMI & ASSOCIATES

501 Sumner Street, Suite 521
Honolulu, HI 96817-5031
Phone: (808) 533-3646 Fax: (808) 526-1267

File Name : WE_Honoapiilani Hwy - Hoohui Rd
Site Code : 00000000
Start Date : 12/10/2016
Page No : 2

	HONOAPIILANI HWY Southbound					HOOHUI RD Westbound					HONOAPIILANI HWY Northbound					HOOHUI RD Eastbound					
Start Time	**Left**	**Thru**	**Right**	**Peds**	**App. Total**	**Left**	**Thru**	**Right**	**Peds**	**App. Total**	**Left**	**Thru**	**Right**	**Peds**	**App. Total**	**Left**	**Thru**	**Right**	**Peds**	**App. Total**	**Int. Total**
Peak Hour Analysis From 11:30 AM to 12:15 PM - Peak 1 of 1																					
Peak Hour for Entire Intersection Begins at 11:30 AM																					
11:30 AM	3	**111**	12	**3**	**129**	**14**	4	0	**2**	**20**	24	80	4	0	108	10	1	**52**	0	**63**	320
11:45 AM	2	101	**15**	1	119	7	0	2	0	9	25	76	**6**	0	107	14	**6**	38	0	58	293
12:00 PM	**4**	103	14	0	121	5	**7**	**3**	0	15	**41**	108	6	0	**155**	12	5	45	0	62	**353**
12:15 PM	3	99	14	1	117	9	4	0	1	14	28	**111**	6	0	145	**16**	4	41	0	61	337
Total Volume	12	414	55	5	486	35	15	5	3	58	118	375	22	0	515	52	16	176	0	244	1303
% App. Total	2.5	85.2	11.3	1		60.3	25.9	8.6	5.2		22.9	72.8	4.3	0		21.3	6.6	72.1	0		
PHF	.750	.932	.917	.417	.942	.625	.536	.417	.375	.725	.720	.845	.917	.000	.831	.813	.667	.846	.000	.968	.923

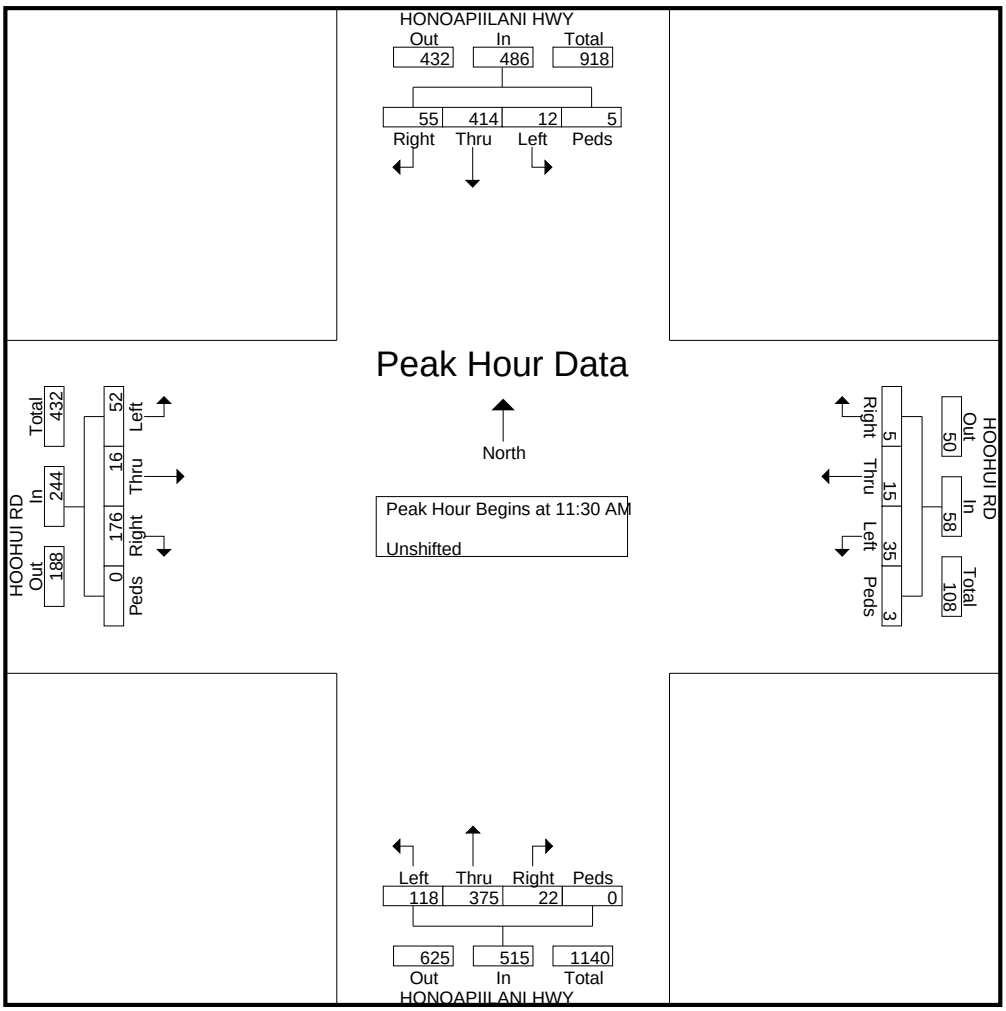

AUSTIN TSUTSUMI & ASSOCIATES

501 Sumner Street, Suite 521
Honolulu, HI 96817-5031
Phone: (808) 533-3646 Fax: (808) 526-1267

File Name : WE_Honnoapiilani Hwy - Akahele St
Site Code : 00000000
Start Date : 12/10/2016
Page No : 1

Groups Printed- Unshifted - Bank 1

	HONOAPIILANI HWY Southbound				AKAHELE ST Westbound				HONOAPIILANI HWY Northbound				AKAHELE ST Eastbound				
Start Time	Left	Thru	Right	Peds	Left	Thru	Right	Peds	Left	Thru	Right	Peds	Left	Thru	Right	Peds	Int. Total
11:00 AM	1	118	5	0	1	2	1	0	13	83	2	0	11	3	22	0	262
11:15 AM	1	115	15	0	4	3	0	0	12	108	2	3	5	1	18	0	287
11:30 AM	2	172	12	0	3	0	3	0	20	88	1	0	8	0	25	0	334
11:45 AM	1	130	14	0	3	0	1	0	15	95	4	3	11	2	14	0	293
Total	5	535	46	0	11	5	5	0	60	374	9	6	35	6	79	0	1176
12:00 PM	1	136	11	0	0	0	5	0	21	140	4	0	10	2	16	0	346
12:15 PM	0	143	8	0	4	2	1	0	14	139	2	0	8	1	19	1	342
12:30 PM	0	124	16	0	2	1	0	0	14	136	2	0	8	0	13	0	316
12:45 PM	2	120	10	0	1	1	5	0	16	152	1	0	8	1	14	0	331
Total	3	523	45	0	7	4	11	0	65	567	9	0	34	4	62	1	1335
Grand Total	8	1058	91	0	18	9	16	0	125	941	18	6	69	10	141	1	2511
Apprch %	0.7	91.4	7.9	0	41.9	20.9	37.2	0	11.5	86.3	1.7	0.6	31.2	4.5	63.8	0.5	
Total %	0.3	42.1	3.6	0	0.7	0.4	0.6	0	5	37.5	0.7	0.2	2.7	0.4	5.6	0	
Unshifted	8	1058	91	0	18	9	16	0	125	941	18	6	69	10	141	1	2511
% Unshifted	100	100	100	0	100	100	100	0	100	100	100	100	100	100	100	100	100
Bank 1	0	0	0	0	0	0	0	0	0	0	0	0	0	0	0	0	0
% Bank 1	0	0	0	0	0	0	0	0	0	0	0	0	0	0	0	0	0

AUSTIN TSUTSUMI & ASSOCIATES

501 Sumner Street, Suite 521
Honolulu, HI 96817-5031
Phone: (808) 533-3646 Fax: (808) 526-1267

File Name : WE_Honnoapiilani Hwy - Akahele St
Site Code : 00000000
Start Date : 12/10/2016
Page No : 2

	HONOAPIILANI HWY Southbound					AKAHELE ST Westbound					HONOAPIILANI HWY Northbound					AKAHELE ST Eastbound					
Start Time	Left	Thru	Right	Peds	App. Total	Left	Thru	Right	Peds	App. Total	Left	Thru	Right	Peds	App. Total	Left	Thru	Right	Peds	App. Total	Int. Total
Peak Hour Analysis From 11:30 AM to 12:15 PM - Peak 1 of 1																					
Peak Hour for Entire Intersection Begins at 11:30 AM																					
11:30 AM	**2**	**172**	12	0	**186**	3	0	3	0	6	20	88	1	0	109	8	0	**25**	0	**33**	334
11:45 AM	1	130	**14**	0	145	3	0	1	0	4	15	95	**4**	**3**	117	**11**	**2**	14	0	27	293
12:00 PM	1	136	11	0	148	0	0	**5**	0	5	**21**	**140**	4	0	**165**	10	2	16	0	28	**346**
12:15 PM	0	143	8	0	151	**4**	**2**	1	0	**7**	14	139	2	0	155	8	1	19	**1**	29	342
Total Volume	4	581	45	0	630	10	2	10	0	22	70	462	11	3	546	37	5	74	1	117	1315
% App. Total	0.6	92.2	7.1	0		45.5	9.1	45.5	0		12.8	84.6	2	0.5		31.6	4.3	63.2	0.9		
PHF	.500	.844	.804	.000	.847	.625	.250	.500	.000	.786	.833	.825	.688	.250	.827	.841	.625	.740	.250	.886	.950

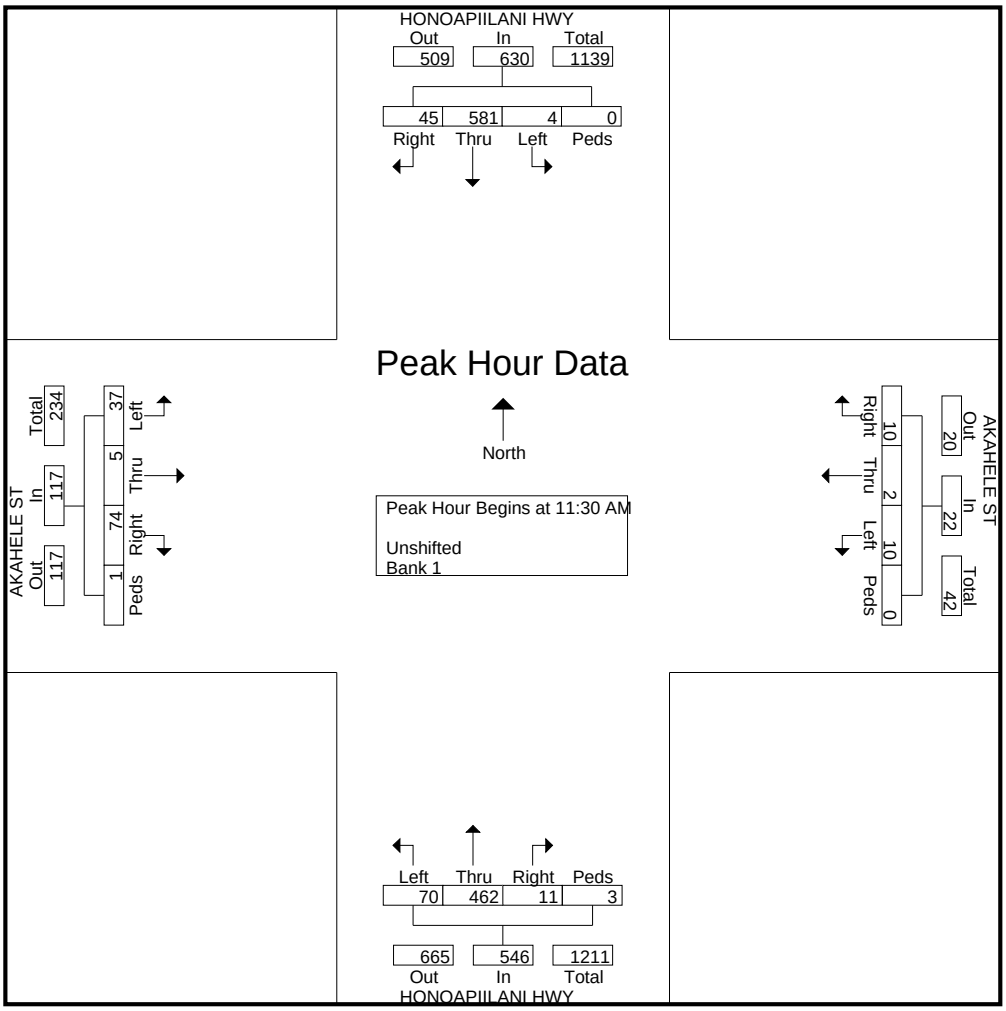

AUSTIN TSUTSUMI & ASSOCIATES

501 Sumner Street, Suite 521
Honolulu, HI 96817-5031
Phone: (808) 533-3646 Fax: (808) 526-1267

File Name : WE_Honoapiilani Hwy - Lower Honoapiilani Rd
Site Code : 00000000
Start Date : 12/10/2016
Page No : 1

Groups Printed- Unshifted

	HONOAPIILANI HWY Southbound				LOWER HONOAPIILANI Westbound				HONOAPIILANI HWY Northbound				LOWER HONOAPIILANI Eastbound				
Start Time	**Left**	**Thru**	**Right**	**Peds**	**Left**	**Thru**	**Right**	**Peds**	**Left**	**Thru**	**Right**	**Peds**	**Left**	**Thru**	**Right**	**Peds**	**Int. Total**
11:00 AM	0	135	20	0	0	0	0	0	71	100	0	0	11	3	157	0	497
11:15 AM	0	118	11	0	0	0	0	0	76	112	3	0	14	24	133	0	491
11:30 AM	0	164	14	1	2	0	1	0	90	89	2	0	10	0	140	0	513
11:45 AM	0	134	11	0	2	0	0	0	83	107	2	0	14	0	128	3	484
Total	0	551	56	1	4	0	1	0	320	408	7	0	49	27	558	3	1985
12:00 PM	0	186	14	0	2	0	0	0	90	155	1	0	17	2	132	0	599
12:15 PM	0	148	8	0	3	0	0	0	93	150	0	0	7	7	136	0	552
12:30 PM	1	128	15	0	0	1	1	0	78	148	2	0	7	11	98	0	490
12:45 PM	0	123	22	0	0	2	0	0	84	149	0	0	10	2	88	0	480
Total	1	585	59	0	5	3	1	0	345	602	3	0	41	22	454	0	2121
Grand Total	1	1136	115	1	9	3	2	0	665	1010	10	0	90	49	1012	3	4106
Apprch %	0.1	90.7	9.2	0.1	64.3	21.4	14.3	0	39.5	59.9	0.6	0	7.8	4.2	87.7	0.3	
Total %	0	27.7	2.8	0	0.2	0.1	0	0	16.2	24.6	0.2	0	2.2	1.2	24.6	0.1	

AUSTIN TSUTSUMI & ASSOCIATES

501 Sumner Street, Suite 521
Honolulu, HI 96817-5031
Phone: (808) 533-3646 Fax: (808) 526-1267

File Name : WE_Honoapiilani Hwy - Lower Honoapiilani Rd
Site Code : 00000000
Start Date : 12/10/2016
Page No : 2

	HONOAPIILANI HWY Southbound					LOWER HONOAPIILANI Westbound					HONOAPIILANI HWY Northbound					LOWER HONOAPIILANI Eastbound					
Start Time	**Left**	**Thru**	**Right**	**Peds**	**App. Total**	**Left**	**Thru**	**Right**	**Peds**	**App. Total**	**Left**	**Thru**	**Right**	**Peds**	**App. Total**	**Left**	**Thru**	**Right**	**Peds**	**App. Total**	**Int. Total**
Peak Hour Analysis From 11:00 AM to 12:45 PM - Peak 1 of 1																					
Peak Hour for Entire Intersection Begins at 11:30 AM																					
11:30 AM	0	164	**14**	**1**	179	2	0	**1**	0	**3**	90	89	**2**	0	181	10	0	**140**	0	150	513
11:45 AM	0	134	11	0	145	2	0	0	0	2	83	107	2	0	192	14	0	128	**3**	145	484
12:00 PM	0	**186**	14	0	**200**	2	0	0	0	2	90	**155**	1	0	**246**	**17**	2	132	0	**151**	**599**
12:15 PM	0	148	8	0	156	**3**	0	0	0	3	**93**	150	0	0	243	7	**7**	136	0	150	552
Total Volume	0	632	47	1	680	9	0	1	0	10	356	501	5	0	862	48	9	536	3	596	2148
% App. Total	0	92.9	6.9	0.1		90	0	10	0		41.3	58.1	0.6	0		8.1	1.5	89.9	0.5		
PHF	.000	.849	.839	.250	.850	.750	.000	.250	.000	.833	.957	.808	.625	.000	.876	.706	.321	.957	.250	.987	.896

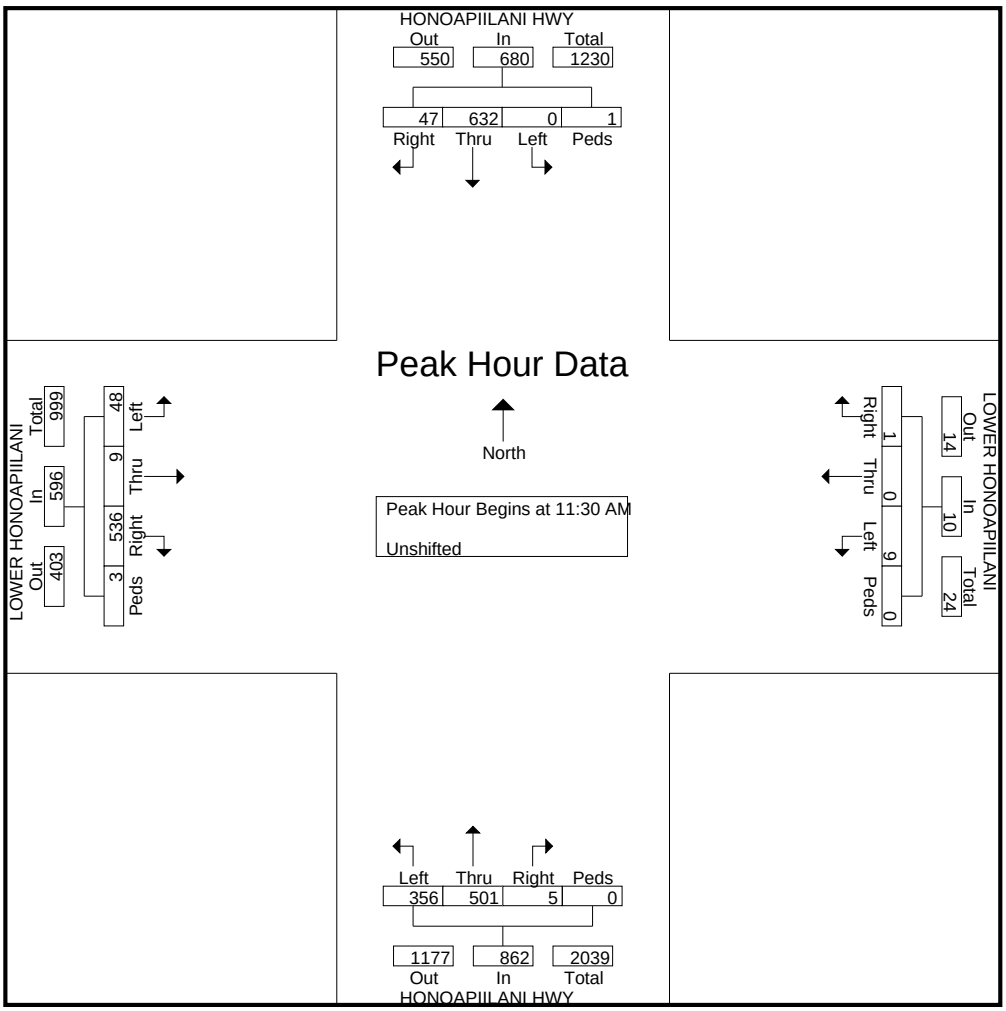

AUSTIN TSUTSUMI & ASSOCIATES

501 Sumner Street, Suite 521
Honolulu, HI 96817-5031
Phone: (808) 533-3646 Fax: (808) 526-1267

File Name : WE_Honoapiilani Hwy - Halawai Dr
Site Code : 00000000
Start Date : 12/10/2016
Page No : 1

Groups Printed- Unshifted

	HONOAPIILANI HWY Southbound				HALAWAI DR Westbound				HONOAPIILANI HWY Northbound				HALAWAI DR Eastbound				
Start Time	**Left**	**Thru**	**Right**	**Peds**	**Left**	**Thru**	**Right**	**Peds**	**Left**	**Thru**	**Right**	**Peds**	**Left**	**Thru**	**Right**	**Peds**	**Int. Total**
11:00 AM	0	290	6	0	0	3	2	0	6	149	0	0	1	0	8	0	465
11:15 AM	0	288	4	0	1	0	0	0	3	188	1	0	2	0	10	0	497
11:30 AM	1	318	11	0	5	1	1	0	6	203	2	0	3	0	11	0	562
11:45 AM	4	266	8	2	3	1	5	0	17	191	6	0	7	2	13	0	525
Total	5	1162	29	2	9	5	8	0	32	731	9	0	13	2	42	0	2049
12:00 PM	2	259	8	4	4	0	2	0	11	219	5	0	7	0	21	3	545
12:15 PM	2	298	12	1	2	0	4	0	9	213	2	0	9	0	21	0	573
12:30 PM	2	236	4	0	6	0	4	0	10	226	6	0	4	2	12	2	514
Grand Total	11	1955	53	7	21	5	18	0	62	1389	22	0	33	4	96	5	3681
Apprch %	0.5	96.5	2.6	0.3	47.7	11.4	40.9	0	4.2	94.3	1.5	0	23.9	2.9	69.6	3.6	
Total %	0.3	53.1	1.4	0.2	0.6	0.1	0.5	0	1.7	37.7	0.6	0	0.9	0.1	2.6	0.1	

AUSTIN TSUTSUMI & ASSOCIATES

501 Sumner Street, Suite 521
Honolulu, HI 96817-5031
Phone: (808) 533-3646 Fax: (808) 526-1267

File Name : WE_Honoapiilani Hwy - Halawai Dr
Site Code : 00000000
Start Date : 12/10/2016
Page No : 2

	HONOAPIILANI HWY Southbound					HALAWAI DR Westbound					HONOAPIILANI HWY Northbound					HALAWAI DR Eastbound					
Start Time	**Left**	**Thru**	**Right**	**Peds**	**App. Total**	**Left**	**Thru**	**Right**	**Peds**	**App. Total**	**Left**	**Thru**	**Right**	**Peds**	**App. Total**	**Left**	**Thru**	**Right**	**Peds**	**App. Total**	**Int. Total**
Peak Hour Analysis From 11:00 AM to 12:30 PM - Peak 1 of 1																					
Peak Hour for Entire Intersection Begins at 11:30 AM																					
11:30 AM	1	**318**	11	0	**330**	**5**	**1**	1	0	7	6	203	2	0	211	3	0	11	0	14	562
11:45 AM	**4**	266	8	2	280	3	1	**5**	0	**9**	**17**	191	**6**	0	214	7	**2**	13	0	22	525
12:00 PM	2	259	8	**4**	273	4	0	2	0	6	11	**219**	5	0	**235**	7	0	**21**	**3**	**31**	545
12:15 PM	2	298	**12**	1	313	2	0	4	0	6	9	213	2	0	224	**9**	0	21	0	30	**573**
Total Volume	9	1141	39	7	1196	14	2	12	0	28	43	826	15	0	884	26	2	66	3	97	2205
% App. Total	0.8	95.4	3.3	0.6		50	7.1	42.9	0		4.9	93.4	1.7	0		26.8	2.1	68	3.1		
PHF	.563	.897	.813	.438	.906	.700	.500	.600	.000	.778	.632	.943	.625	.000	.940	.722	.250	.786	.250	.782	.962

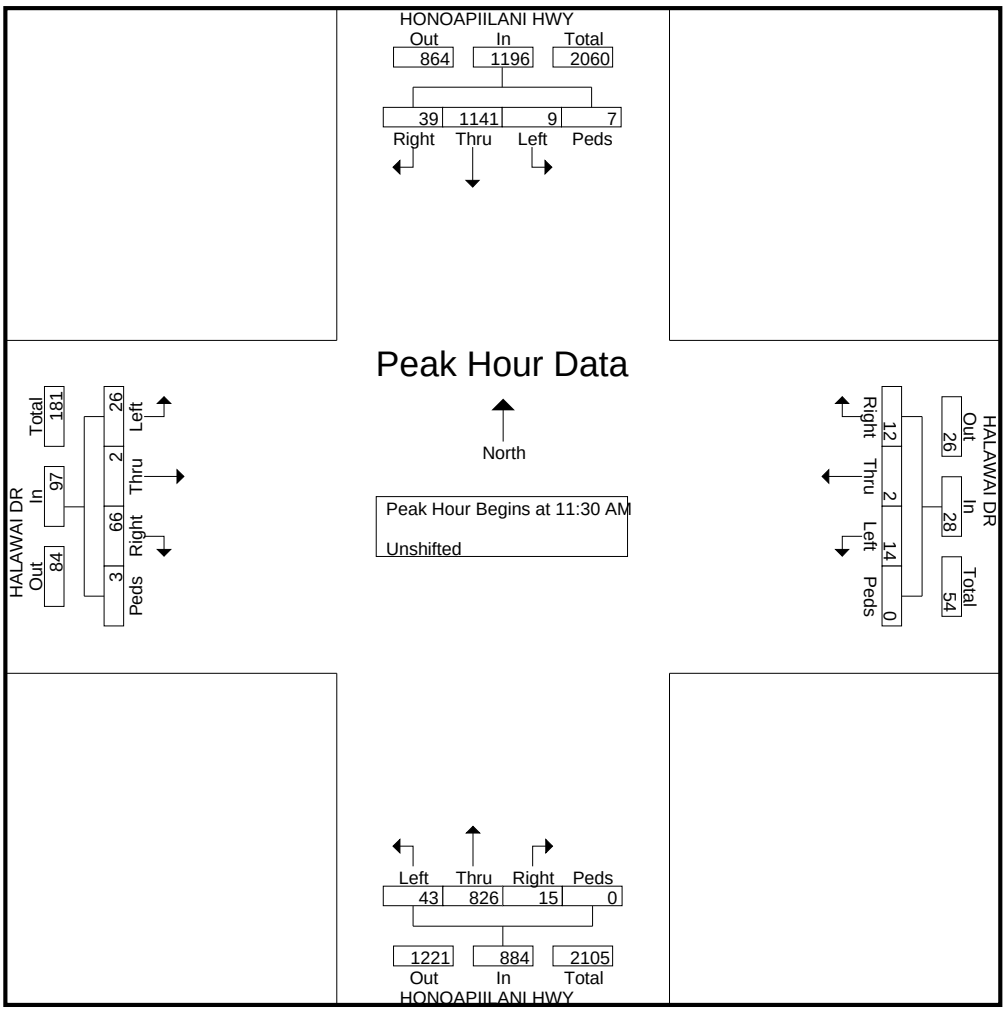

AUSTIN TSUTSUMI & ASSOCIATES

501 Sumner Street, Suite 521
Honolulu, HI 96817-5031
Phone: (808) 533-3646 Fax: (808) 526-1267

File Name : WE_Honoapiilani Hwy-Puukolii Rd
Site Code : 00000000
Start Date : 12/10/2016
Page No : 1

Groups Printed- Unshifted

	KAI ALA DR Eastbound				PUUKOLII RD Westbound				HONOAPIILANI HWY Northbound					HONOAPIILANI HWY Southbound					
Start Time	Left	Thru	Right	Peds	Left	Thru	Right	Peds	Left	Thru	Right	U-Turn	Peds	Left	Thru	Right	U-Turn	Peds	Int. Total
11:00 AM	14	0	46	0	8	0	4	0	15	140	6	0	0	2	283	11	0	0	529
11:15 AM	10	1	47	0	10	0	11	0	21	165	11	2	0	6	257	14	1	0	556
11:30 AM	13	1	42	0	11	0	6	0	18	187	13	0	0	9	284	15	0	0	599
11:45 AM	13	1	38	0	14	1	10	0	28	173	9	0	0	5	272	18	0	0	582
Total	50	3	173	0	43	1	31	0	82	665	39	2	0	22	1096	58	1	0	2266
12:00 PM	7	0	42	0	10	1	4	0	25	216	9	0	0	7	262	14	0	0	597
12:15 PM	15	0	45	0	3	1	7	0	30	206	14	2	0	6	296	16	0	0	641
12:30 PM	9	0	41	0	9	0	6	0	36	230	12	0	0	6	251	11	0	0	611
12:45 PM	20	0	26	0	9	0	9	0	39	231	7	0	0	8	217	15	0	0	581
Total	51	0	154	0	31	2	26	0	130	883	42	2	0	27	1026	56	0	0	2430
Grand Total	101	3	327	0	74	3	57	0	212	1548	81	4	0	49	2122	114	1	0	4696
Apprch %	23.4	0.7	75.9	0	55.2	2.2	42.5	0	11.5	83.9	4.4	0.2	0	2.1	92.8	5	0	0	
Total %	2.2	0.1	7	0	1.6	0.1	1.2	0	4.5	33	1.7	0.1	0	1	45.2	2.4	0	0	

AUSTIN TSUTSUMI & ASSOCIATES

501 Sumner Street, Suite 521
Honolulu, HI 96817-5031
Phone: (808) 533-3646 Fax: (808) 526-1267

File Name : WE_Honoapiilani Hwy-Puukolii Rd
Site Code : 00000000
Start Date : 12/10/2016
Page No : 2

	KAI ALA DR Eastbound					PUUKOLII RD Westbound					HONOAPIILANI HWY Northbound						HONOAPIILANI HWY Southbound						
Start Time	Left	Thru	Right	Peds	App. Total	Left	Thru	Right	Peds	App. Total	Left	Thru	Right	U-Turn	Peds	App. Total	Left	Thru	Right	U-Turn	Peds	App. Total	Int. Total
Peak Hour Analysis From 11:30 AM to 12:15 PM - Peak 1 of 1																							
Peak Hour for Entire Intersection Begins at 11:30 AM																							
11:30 AM	13	**1**	42	0	56	11	0	6	0	17	18	187	13	0	0	218	**9**	284	15	0	0	308	599
11:45 AM	13	1	38	0	52	**14**	**1**	**10**	0	**25**	28	173	9	0	0	210	5	272	**18**	0	0	295	582
12:00 PM	7	0	42	0	49	10	1	4	0	15	25	**216**	9	0	0	250	7	262	14	0	0	283	597
12:15 PM	**15**	0	**45**	0	**60**	3	1	7	0	11	**30**	206	**14**	**2**	0	**252**	6	**296**	16	0	0	**318**	**641**
Total Volume	48	2	167	0	217	38	3	27	0	68	101	782	45	2	0	930	27	1114	63	0	0	1204	2419
% App. Total	22.1	0.9	77	0		55.9	4.4	39.7	0		10.9	84.1	4.8	0.2	0		2.2	92.5	5.2	0	0		
PHF	.800	.500	.928	.000	.904	.679	.750	.675	.000	.680	.842	.905	.804	.250	.000	.923	.750	.941	.875	.000	.000	.947	.943

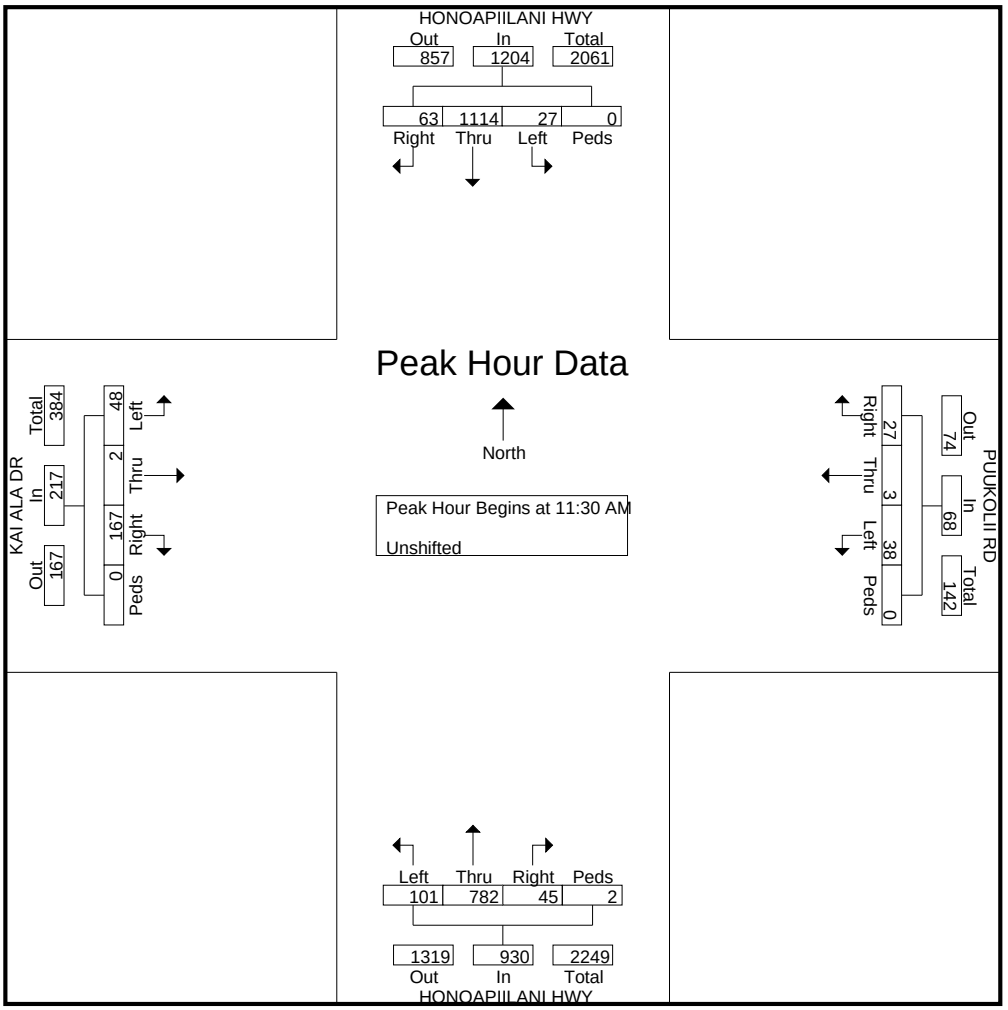

AUSTIN TSUTSUMI & ASSOCIATES

501 Sumner Street, Suite 521
Honolulu, HI 96817-5031
Phone: (808) 533-3646 Fax: (808) 526-1267

File Name : WE_Honopiilani Hwy - Kaanapali Pkwy_Halelo St
Site Code : 00000000
Start Date : 1/21/2017
Page No : 1

Groups Printed- Unshifted

	HONOAPIILANI HWY Southbound				HALELO ST Westbound				HONOAPIILANI HWY Northbound				KAANAPALI PKWY Eastbound				
Start Time	**Left**	**Thru**	**Right**	**Peds**	**Left**	**Thru**	**Right**	**Peds**	**Left**	**Thru**	**Right**	**Peds**	**Left**	**Thru**	**Right**	**Peds**	**Int. Total**
11:00 AM	10	382	55	0	0	0	1	0	70	191	7	0	58	0	101	0	875
11:15 AM	11	314	31	0	4	0	0	0	83	188	6	0	54	0	107	0	798
11:30 AM	5	342	40	0	3	1	1	0	57	247	3	0	48	0	108	1	856
11:45 AM	6	272	28	0	5	1	6	0	61	202	2	0	60	1	94	0	738
Total	32	1310	154	0	12	2	8	0	271	828	18	0	220	1	410	1	3267
12:00 PM	9	294	35	0	3	1	4	0	74	220	5	0	37	0	108	0	790
12:15 PM	5	233	33	0	1	0	4	0	88	239	2	0	59	0	122	0	786
12:30 PM	14	267	31	0	2	1	1	0	81	243	2	0	52	1	114	0	809
12:45 PM	6	211	28	0	3	3	2	0	84	289	5	0	46	0	86	0	763
Total	34	1005	127	0	9	5	11	0	327	991	14	0	194	1	430	0	3148
Grand Total	66	2315	281	0	21	7	19	0	598	1819	32	0	414	2	840	1	6415
Apprch %	2.5	87	10.6	0	44.7	14.9	40.4	0	24.4	74.3	1.3	0	32.9	0.2	66.8	0.1	
Total %	1	36.1	4.4	0	0.3	0.1	0.3	0	9.3	28.4	0.5	0	6.5	0	13.1	0	

AUSTIN TSUTSUMI & ASSOCIATES

501 Sumner Street, Suite 521
Honolulu, HI 96817-5031
Phone: (808) 533-3646 Fax: (808) 526-1267

File Name : WE_Honopiilani Hwy - Kaanapali Pkwy_Halelo St
Site Code : 00000000
Start Date : 1/21/2017
Page No : 2

	HONOAPIILANI HWY Southbound					HALELO ST Westbound					HONOAPIILANI HWY Northbound					KAANAPALI PKWY Eastbound					
Start Time	**Left**	**Thru**	**Right**	**Peds**	**App. Total**	**Left**	**Thru**	**Right**	**Peds**	**App. Total**	**Left**	**Thru**	**Right**	**Peds**	**App. Total**	**Left**	**Thru**	**Right**	**Peds**	**App. Total**	**Int. Total**
Peak Hour Analysis From 11:30 AM to 12:15 PM - Peak 1 of 1																					
Peak Hour for Entire Intersection Begins at 11:30 AM																					
11:30 AM	5	**342**	**40**	0	**387**	3	**1**	1	0	5	57	**247**	3	0	307	48	0	108	**1**	157	**856**
11:45 AM	6	272	28	0	306	**5**	1	**6**	0	**12**	61	202	2	0	265	**60**	**1**	94	0	155	738
12:00 PM	**9**	294	35	0	338	3	1	4	0	8	74	220	**5**	0	299	37	0	108	0	145	790
12:15 PM	5	233	33	0	271	1	0	4	0	5	**88**	239	2	0	**329**	59	0	**122**	0	**181**	786
Total Volume	25	1141	136	0	1302	12	3	15	0	30	280	908	12	0	1200	204	1	432	1	638	3170
% App. Total	1.9	87.6	10.4	0		40	10	50	0		23.3	75.7	1	0		32	0.2	67.7	0.2		
PHF	.694	.834	.850	.000	.841	.600	.750	.625	.000	.625	.795	.919	.600	.000	.912	.850	.250	.885	.250	.881	.926

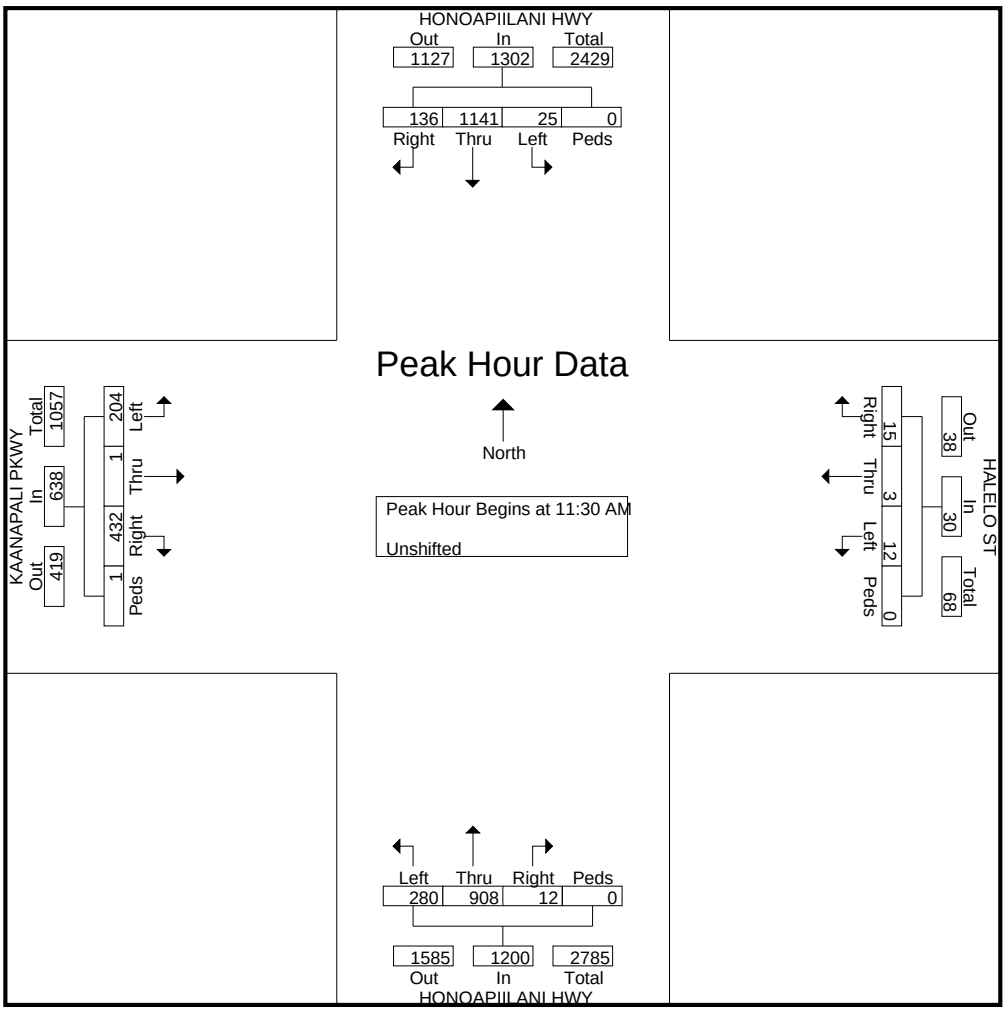

AUSTIN TSUTSUMI & ASSOCIATES

501 Sumner Street, Suite 521
Honolulu, HI 96817-5031
Phone: (808) 533-3646 Fax: (808) 526-1267

File Name : WE_Honoapiilani Hwy-Leialii Pkwy
Site Code : 00000000
Start Date : 12/10/2016
Page No : 1

Groups Printed- Unshifted

	LEIALII PKWY Eastbound				LEIALII PKWY Westbound				HONOAPIILANI HWY Northbound				HONOAPIILANI HWY Southbound				
Start Time	Left	Thru	Right	Peds	Left	Thru	Right	Peds	Left	Thru	Right	Peds	Left	Thru	Right	Peds	Int. Total
11:00 AM	0	1	1	0	23	1	4	0	1	187	12	0	19	378	4	0	631
11:15 AM	1	0	2	0	18	0	12	0	0	216	13	0	18	410	0	0	690
11:30 AM	0	0	2	0	47	1	16	0	0	228	25	0	21	371	0	0	711
11:45 AM	0	0	0	0	33	0	16	0	0	286	26	0	25	392	1	0	779
Total	1	1	5	0	121	2	48	0	1	917	76	0	83	1551	5	0	2811
12:00 PM	2	0	0	0	30	0	9	0	1	291	10	0	14	398	3	0	758
12:15 PM	0	0	1	0	20	0	10	0	1	278	22	0	18	397	2	0	749
12:30 PM	0	0	1	0	19	0	15	0	0	333	17	0	12	376	0	0	773
12:45 PM	2	0	0	0	21	0	18	0	0	324	24	0	14	296	0	1	700
Total	4	0	2	0	90	0	52	0	2	1226	73	0	58	1467	5	1	2980
Grand Total	5	1	7	0	211	2	100	0	3	2143	149	0	141	3018	10	1	5791
Apprch %	38.5	7.7	53.8	0	67.4	0.6	31.9	0	0.1	93.4	6.5	0	4.4	95.2	0.3	0	
Total %	0.1	0	0.1	0	3.6	0	1.7	0	0.1	37	2.6	0	2.4	52.1	0.2	0	

AUSTIN TSUTSUMI & ASSOCIATES

501 Sumner Street, Suite 521
Honolulu, HI 96817-5031
Phone: (808) 533-3646 Fax: (808) 526-1267

File Name : WE_Honoapiilani Hwy-Leialii Pkwy
Site Code : 00000000
Start Date : 12/10/2016
Page No : 2

	LEIALII PKWY Eastbound					LEIALII PKWY Westbound					HONOAPIILANI HWY Northbound					HONOAPIILANI HWY Southbound					
Start Time	Left	Thru	Right	Peds	App. Total	Left	Thru	Right	Peds	App. Total	Left	Thru	Right	Peds	App. Total	Left	Thru	Right	Peds	App. Total	Int. Total
Peak Hour Analysis From 11:30 AM to 12:15 PM - Peak 1 of 1																					
Peak Hour for Entire Intersection Begins at 11:30 AM																					
11:30 AM	0	0	**2**	0	**2**	**47**	**1**	**16**	0	**64**	0	228	25	0	253	21	371	0	0	392	711
11:45 AM	0	0	0	0	0	33	0	16	0	49	0	286	**26**	0	**312**	**25**	392	1	0	**418**	**779**
12:00 PM	**2**	0	0	0	2	30	0	9	0	39	**1**	**291**	10	0	302	14	**398**	**3**	0	415	758
12:15 PM	0	0	1	0	1	20	0	10	0	30	1	278	22	0	301	18	397	2	0	417	749
Total Volume	2	0	3	0	5	130	1	51	0	182	2	1083	83	0	1168	78	1558	6	0	1642	2997
% App. Total	40	0	60	0		71.4	0.5	28	0		0.2	92.7	7.1	0		4.8	94.9	0.4	0		
PHF	.250	.000	.375	.000	.625	.691	.250	.797	.000	.711	.500	.930	.798	.000	.936	.780	.979	.500	.000	.982	.962

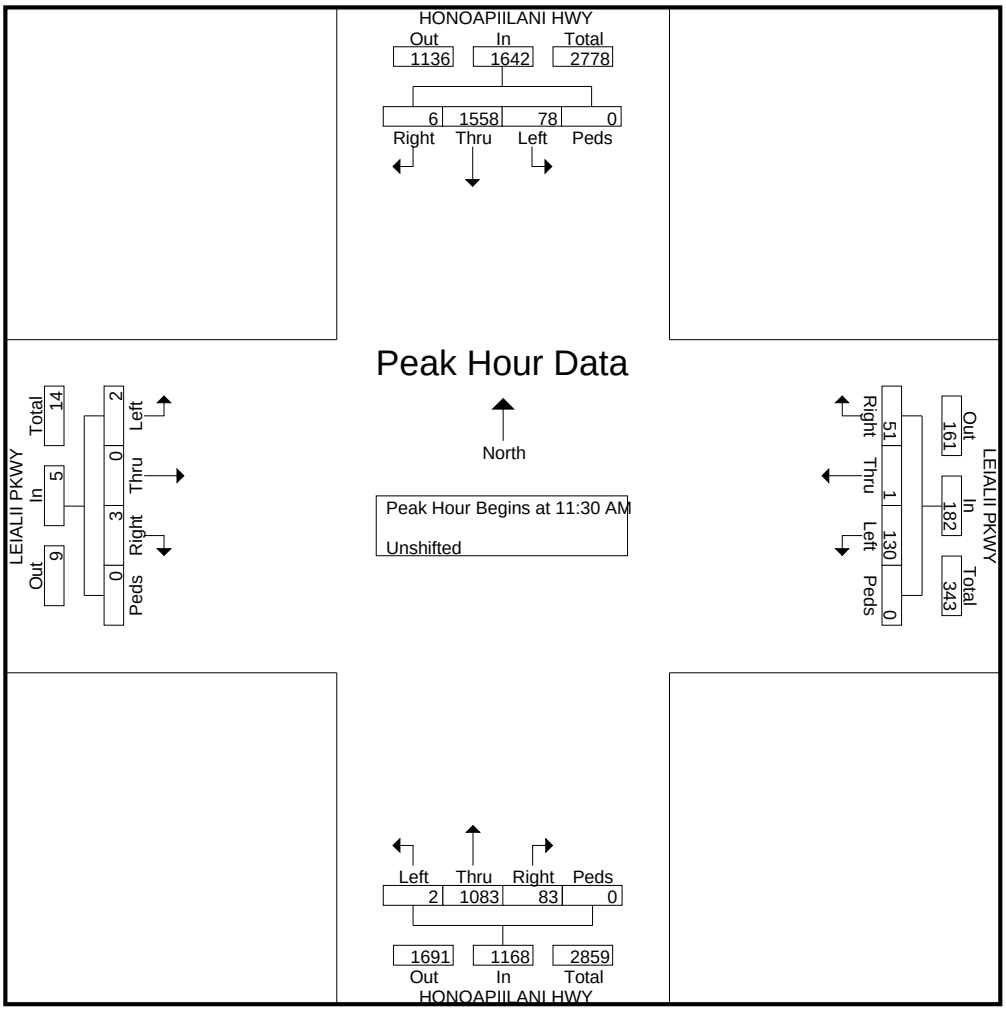

AUSTIN TSUTSUMI & ASSOCIATES

501 Sumner Street, Suite 521
Honolulu, HI 96817-5031
Phone: (808) 533-3646 Fax: (808) 526-1267

File Name : WE_Honoapiilani Hwy - Front St
Site Code : 00000000
Start Date : 12/10/2016
Page No : 1

Groups Printed- Unshifted

	HONOAPIILANI HWY Southbound				FRONT ST Westbound				HONOAPIILANI HWY Northbound				FRONT ST Eastbound				
Start Time	**Left**	**Thru**	**Right**	**Peds**	**Left**	**Thru**	**Right**	**Peds**	**Left**	**Thru**	**Right**	**Peds**	**Left**	**Thru**	**Right**	**Peds**	**Int. Total**
11:00 AM	3	332	17	0	14	2	2	0	4	199	6	0	19	0	4	0	602
11:15 AM	1	349	42	0	15	0	1	0	2	242	3	0	22	0	3	0	680
11:30 AM	2	346	45	0	10	0	2	0	5	230	5	0	29	0	3	0	677
11:45 AM	1	339	52	0	17	0	4	0	3	272	4	0	24	2	3	0	721
Total	7	1366	156	0	56	2	9	0	14	943	18	0	94	2	13	0	2680
12:00 PM	2	337	67	0	19	2	2	0	1	268	4	0	27	1	4	1	735
12:15 PM	2	347	71	0	16	1	3	0	2	275	2	0	34	0	4	0	757
12:30 PM	1	338	58	0	17	4	3	0	1	325	6	0	31	4	4	0	792
12:45 PM	3	246	44	0	13	1	2	0	4	323	6	0	31	0	1	0	674
Total	8	1268	240	0	65	8	10	0	8	1191	18	0	123	5	13	1	2958
Grand Total	15	2634	396	0	121	10	19	0	22	2134	36	0	217	7	26	1	5638
Apprch %	0.5	86.5	13	0	80.7	6.7	12.7	0	1	97.4	1.6	0	86.5	2.8	10.4	0.4	
Total %	0.3	46.7	7	0	2.1	0.2	0.3	0	0.4	37.9	0.6	0	3.8	0.1	0.5	0	

AUSTIN TSUTSUMI & ASSOCIATES

501 Sumner Street, Suite 521
Honolulu, HI 96817-5031
Phone: (808) 533-3646 Fax: (808) 526-1267

File Name : WE_Honoapiilani Hwy - Front St
Site Code : 00000000
Start Date : 12/10/2016
Page No : 2

	HONOAPIILANI HWY Southbound					FRONT ST Westbound					HONOAPIILANI HWY Northbound					FRONT ST Eastbound					
Start Time	**Left**	**Thru**	**Right**	**Peds**	**App. Total**	**Left**	**Thru**	**Right**	**Peds**	**App. Total**	**Left**	**Thru**	**Right**	**Peds**	**App. Total**	**Left**	**Thru**	**Right**	**Peds**	**App. Total**	**Int. Total**
Peak Hour Analysis From 11:30 AM to 12:15 PM - Peak 1 of 1																					
Peak Hour for Entire Intersection Begins at 11:30 AM																					
11:30 AM	**2**	346	45	0	393	10	0	2	0	12	**5**	230	**5**	0	240	29	0	3	0	32	677
11:45 AM	1	339	52	0	392	17	0	**4**	0	21	3	272	4	0	**279**	24	**2**	3	0	29	721
12:00 PM	2	337	67	0	406	**19**	**2**	2	0	**23**	1	268	4	0	273	27	1	**4**	**1**	33	735
12:15 PM	2	**347**	**71**	0	**420**	16	1	3	0	20	2	**275**	2	0	279	**34**	0	4	0	**38**	**757**
Total Volume	7	1369	235	0	1611	62	3	11	0	76	11	1045	15	0	1071	114	3	14	1	132	2890
% App. Total	0.4	85	14.6	0		81.6	3.9	14.5	0		1	97.6	1.4	0		86.4	2.3	10.6	0.8		
PHF	.875	.986	.827	.000	.959	.816	.375	.688	.000	.826	.550	.950	.750	.000	.960	.838	.375	.875	.250	.868	.954

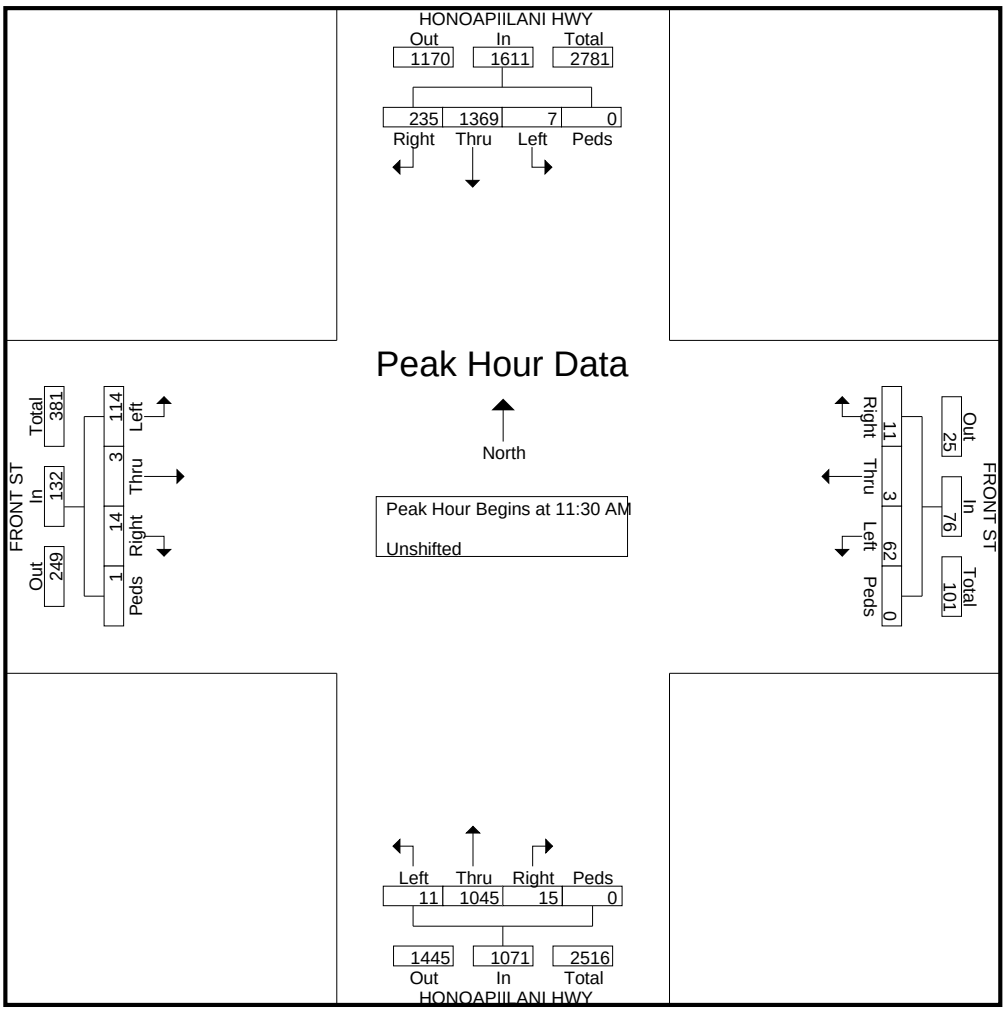

AUSTIN TSUTSUMI & ASSOCIATES

501 Sumner Street, Suite 521
Honolulu, HI 96817-5031
Phone: (808) 533-3646 Fax: (808) 526-1267

File Name : WE_Honoapiilani Hwy - Kapunakea St
Site Code : 00000000
Start Date : 1/21/2017
Page No : 1

Groups Printed- Unshifted

	HONOAPIILANI HWY Southbound				KAPUNAKEA ST Westbound				KAPUNAKEA ST Northbound				KAPUNAKEA ST Eastbound				
Start Time	**Left**	**Thru**	**Right**	**Peds**	**Left**	**Thru**	**Right**	**Peds**	**Left**	**Thru**	**Right**	**Peds**	**Left**	**Thru**	**Right**	**Peds**	**Int. Total**
11:00 AM	3	347	19	0	23	6	1	1	11	256	13	0	36	7	12	0	735
11:15 AM	2	425	36	0	32	0	1	1	15	272	12	0	33	8	5	0	842
11:30 AM	4	413	35	1	18	5	4	0	14	289	12	2	32	3	14	0	846
11:45 AM	7	338	28	0	21	5	1	2	11	255	7	1	37	5	7	0	725
Total	16	1523	118	1	94	16	7	4	51	1072	44	3	138	23	38	0	3148
12:00 PM	1	304	24	1	22	5	1	6	21	265	15	0	31	4	15	2	717
12:15 PM	2	334	31	0	22	4	9	0	12	313	25	0	39	5	12	0	808
12:30 PM	4	283	19	0	21	2	4	3	16	308	26	0	46	3	12	0	747
12:45 PM	1	275	24	3	18	7	2	4	16	314	17	0	30	3	13	0	727
Total	8	1196	98	4	83	18	16	13	65	1200	83	0	146	15	52	2	2999
Grand Total	24	2719	216	5	177	34	23	17	116	2272	127	3	284	38	90	2	6147
Apprch %	0.8	91.7	7.3	0.2	70.5	13.5	9.2	6.8	4.6	90.2	5	0.1	68.6	9.2	21.7	0.5	
Total %	0.4	44.2	3.5	0.1	2.9	0.6	0.4	0.3	1.9	37	2.1	0	4.6	0.6	1.5	0	

AUSTIN TSUTSUMI & ASSOCIATES

501 Sumner Street, Suite 521
Honolulu, HI 96817-5031
Phone: (808) 533-3646 Fax: (808) 526-1267

File Name : WE_Honoapiilani Hwy - Kapunakea St
Site Code : 00000000
Start Date : 1/21/2017
Page No : 2

	HONOAPIILANI HWY Southbound					KAPUNAKEA ST Westbound					KAPUNAKEA ST Northbound					KAPUNAKEA ST Eastbound					
Start Time	**Left**	**Thru**	**Right**	**Peds**	**App. Total**	**Left**	**Thru**	**Right**	**Peds**	**App. Total**	**Left**	**Thru**	**Right**	**Peds**	**App. Total**	**Left**	**Thru**	**Right**	**Peds**	**App. Total**	**Int. Total**
Peak Hour Analysis From 11:30 AM to 12:15 PM - Peak 1 of 1																					
Peak Hour for Entire Intersection Begins at 11:30 AM																					
11:30 AM	4	**413**	**35**	**1**	**453**	18	**5**	4	0	27	14	289	12	**2**	317	32	3	14	0	49	**846**
11:45 AM	**7**	338	28	0	373	21	5	1	2	29	11	255	7	1	274	37	**5**	7	0	49	725
12:00 PM	1	304	24	1	330	**22**	5	1	**6**	34	**21**	265	15	0	301	31	4	**15**	**2**	52	717
12:15 PM	2	334	31	0	367	22	4	**9**	0	**35**	12	**313**	**25**	0	**350**	**39**	5	12	0	**56**	808
Total Volume	14	1389	118	2	1523	83	19	15	8	125	58	1122	59	3	1242	139	17	48	2	206	3096
% App. Total	0.9	91.2	7.7	0.1		66.4	15.2	12	6.4		4.7	90.3	4.8	0.2		67.5	8.3	23.3	1		
PHF	.500	.841	.843	.500	.841	.943	.950	.417	.333	.893	.690	.896	.590	.375	.887	.891	.850	.800	.250	.920	.915

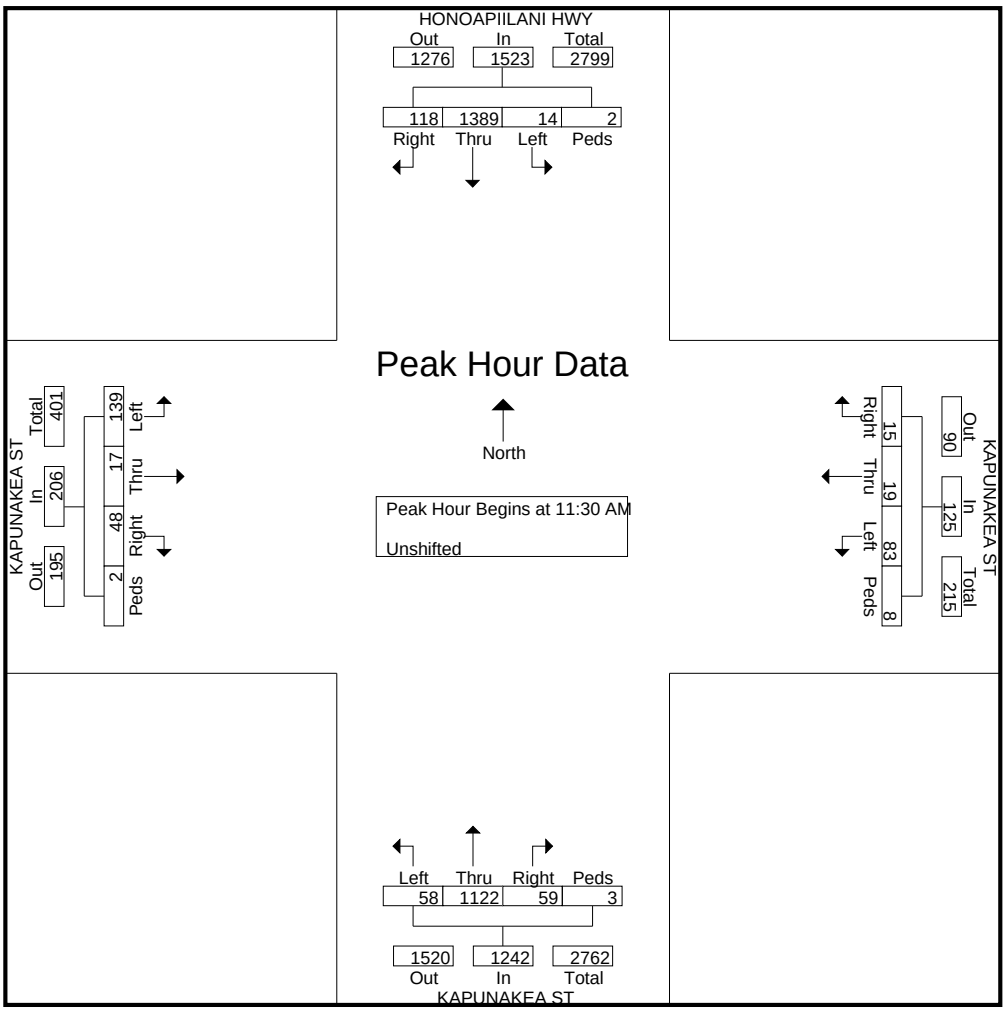

AUSTIN TSUTSUMI & ASSOCIATES

501 Sumner Street, Suite 521
Honolulu, HI 96817-5031
Phone: (808) 533-3646 Fax: (808) 526-1267

File Name : WE_Honoapiilani Hwy - Keawe St
Site Code : 00000000
Start Date : 1/21/2017
Page No : 1

Groups Printed- Unshifted

	HONOAPIILANI HWY Southbound				KEAWE ST Westbound				HONOAPIILANI HWY Northbound				KEAWE ST Eastbound				
Start Time	**Left**	**Thru**	**Right**	**Peds**	**Left**	**Thru**	**Right**	**Peds**	**Left**	**Thru**	**Right**	**Peds**	**Left**	**Thru**	**Right**	**Peds**	**Int. Total**
11:00 AM	76	248	25	5	44	21	93	1	12	182	50	1	8	24	27	0	817
11:15 AM	88	275	26	8	39	15	74	3	25	200	48	1	9	27	14	0	852
11:30 AM	92	270	28	3	39	16	91	5	32	186	47	2	17	31	30	0	889
11:45 AM	93	230	27	12	38	29	87	5	28	183	76	4	13	35	29	0	889
Total	349	1023	106	28	160	81	345	14	97	751	221	8	47	117	100	0	3447
12:00 PM	81	216	20	4	59	25	93	0	20	206	69	2	7	22	35	1	860
12:15 PM	80	236	14	8	55	23	110	1	28	204	64	4	14	24	30	1	896
12:30 PM	80	215	11	7	34	29	104	4	27	249	62	1	12	32	24	0	891
12:45 PM	64	203	14	3	55	25	102	0	19	212	65	1	11	18	17	2	811
Total	305	870	59	22	203	102	409	5	94	871	260	8	44	96	106	4	3458
Grand Total	654	1893	165	50	363	183	754	19	191	1622	481	16	91	213	206	4	6905
Apprch %	23.7	68.5	6	1.8	27.5	13.9	57.2	1.4	8.3	70.2	20.8	0.7	17.7	41.4	40.1	0.8	
Total %	9.5	27.4	2.4	0.7	5.3	2.7	10.9	0.3	2.8	23.5	7	0.2	1.3	3.1	3	0.1	

AUSTIN TSUTSUMI & ASSOCIATES

501 Sumner Street, Suite 521
Honolulu, HI 96817-5031
Phone: (808) 533-3646 Fax: (808) 526-1267

File Name : WE_Honoapiilani Hwy - Keawe St
Site Code : 00000000
Start Date : 1/21/2017
Page No : 2

	HONOAPIILANI HWY Southbound					KEAWE ST Westbound					HONOAPIILANI HWY Northbound					KEAWE ST Eastbound					
Start Time	**Left**	**Thru**	**Right**	**Peds**	**App. Total**	**Left**	**Thru**	**Right**	**Peds**	**App. Total**	**Left**	**Thru**	**Right**	**Peds**	**App. Total**	**Left**	**Thru**	**Right**	**Peds**	**App. Total**	**Int. Total**
Peak Hour Analysis From 11:30 AM to 12:15 PM - Peak 1 of 1																					
Peak Hour for Entire Intersection Begins at 11:30 AM																					
11:30 AM	92	**270**	**28**	3	**393**	39	16	91	**5**	151	**32**	186	47	2	267	**17**	31	30	0	**78**	889
11:45 AM	**93**	230	27	**12**	362	38	**29**	87	5	159	28	183	**76**	**4**	291	13	**35**	29	0	77	889
12:00 PM	81	216	20	4	321	**59**	25	93	0	177	20	**206**	69	2	297	7	22	**35**	**1**	65	860
12:15 PM	80	236	14	8	338	55	23	**110**	1	**189**	28	204	64	4	**300**	14	24	30	1	69	**896**
Total Volume	346	952	89	27	1414	191	93	381	11	676	108	779	256	12	1155	51	112	124	2	289	3534
% App. Total	24.5	67.3	6.3	1.9		28.3	13.8	56.4	1.6		9.4	67.4	22.2	1		17.6	38.8	42.9	0.7		
PHF	.930	.881	.795	.563	.899	.809	.802	.866	.550	.894	.844	.945	.842	.750	.963	.750	.800	.886	.500	.926	.986

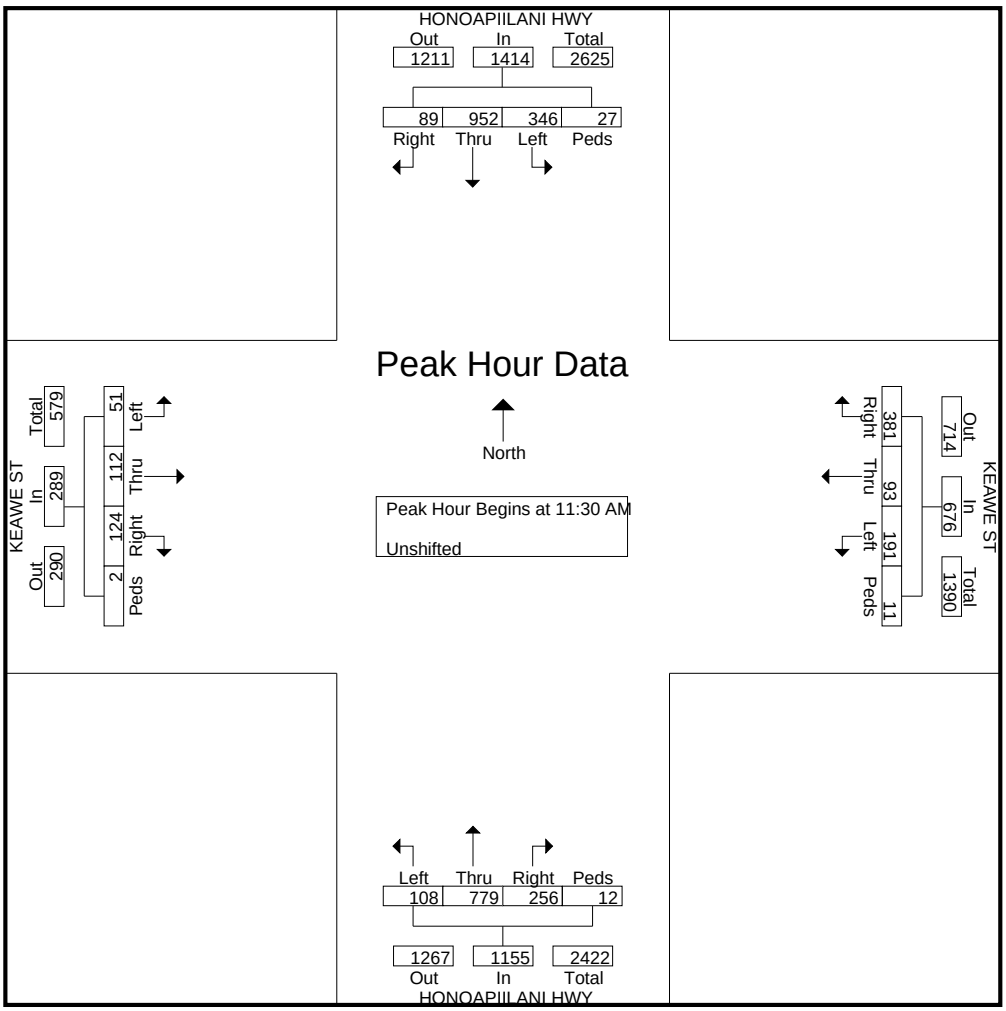

APPENDIX B

LEVEL OF SERVICE CRITERIA

APPENDIX B – LEVEL OF SERVICE (LOS) CRITERIA

VEHICULAR LEVEL OF SERVICE FOR SIGNALIZED INTERSECTIONS (HCM 2010)

Level of service for vehicles at signalized intersections is directly related to delay values and is assigned on that basis. Level of Service is a measure of the acceptability of delay values to motorists at a given intersection. The criteria are given in the table below.

Level-of Service Criteria for Signalized Intersections

Level of Service	Control Delay per Vehicle (sec./veh.)
A	< 10.0
B	>10.0 and ≤ 20.0
C	>20.0 and ≤ 35.0
D	>35.0 and ≤ 55.0
E	>55.0 and ≤ 80.0
F	> 80.0

Delay is a complex measure, and is dependent on a number of variables, including the quality of progression, the cycle length, the green ratio, and the v/c ratio for the lane group or approach in question.

VEHICULAR LEVEL OF SERVICE CRITERIA FOR UNSIGNALIZED INTERSECTIONS (HCM 2010)

The level of service criteria for vehicles at unsignalized intersections is defined as the average control delay, in seconds per vehicle.

LOS delay threshold values are lower for two-way stop-controlled (TWSC) and all-way stop-controlled (AWSC) intersections than those of signalized intersections. This is because more vehicles pass through signalized intersections, and therefore, drivers expect and tolerate greater delays. While the criteria for level of service for TWSC and AWSC intersections are the same, procedures to calculate the average total delay may differ.

Level of Service Criteria for Two-Way Stop-Controlled Intersections

Level of Service	Average Control Delay (sec/veh)
A	≤ 10
B	>10 and ≤15
C	>15 and ≤25
D	>25 and ≤35
E	>35 and ≤50
F	> 50

APPENDIX C

LEVEL OF SERVICE CALCULATIONS

APPENDIX C

LEVEL OF SERVICE CALCULATIONS

- Existing AM Peak

Movement	EBL	EBT	EBR	WBL	WBT	WBR	NBL	NBT	NBR	SBL	SBT	SBR
Lane Configurations												
Traffic Volume (veh/h)	48	37	271	52	28	10	202	204	84	5	117	30
Future Volume (veh/h)	48	37	271	52	28	10	202	204	84	5	117	30
Number	7	4	14	3	8	18	5	2	12	1	6	16
Initial Q (Qb), veh	0	0	0	0	0	0	0	0	0	0	0	0
Ped-Bike Adj(A_pbT)	0.99		0.99	0.99		0.99	1.00		1.00	1.00		1.00
Parking Bus, Adj	1.00	1.00	1.00	1.00	1.00	1.00	1.00	1.00	1.00	1.00	1.00	1.00
Adj Sat Flow, veh/h/ln	1900	1863	1863	1900	1863	1900	1863	1863	1900	1863	1863	1863
Adj Flow Rate, veh/h	52	40	37	57	30	8	220	222	77	5	127	8
Adj No. of Lanes	0	1	1	0	1	0	1	1	0	1	1	1
Peak Hour Factor	0.92	0.92	0.92	0.92	0.92	0.92	0.92	0.92	0.92	0.92	0.92	0.92
Percent Heavy Veh, %	2	2	2	2	2	2	2	2	2	2	2	2
Cap, veh/h	257	135	225	239	86	16	298	567	197	7	493	419
Arrive On Green	0.14	0.14	0.14	0.14	0.14	0.14	0.17	0.43	0.43	0.00	0.26	0.26
Sat Flow, veh/h	747	941	1568	604	600	111	1774	1323	459	1774	1863	1583
Grp Volume(v), veh/h	92	0	37	95	0	0	220	0	299	5	127	8
Grp Sat Flow(s),veh/h/ln	1688	0	1568	1314	0	0	1774	0	1782	1774	1863	1583
Q Serve(g_s), s	0.0	0.0	0.8	1.1	0.0	0.0	4.4	0.0	4.4	0.1	2.0	0.1
Cycle Q Clear(g_c), s	1.7	0.0	0.8	2.8	0.0	0.0	4.4	0.0	4.4	0.1	2.0	0.1
Prop In Lane	0.57		1.00	0.60		0.08	1.00		0.26	1.00		1.00
Lane Grp Cap(c), veh/h	392	0	225	341	0	0	298	0	764	7	493	419
V/C Ratio(X)	0.23	0.00	0.16	0.28	0.00	0.00	0.74	0.00	0.39	0.69	0.26	0.02
Avail Cap(c_a), veh/h	1147	0	996	1062	0	0	1409	0	3726	704	3156	2683
HCM Platoon Ratio	1.00	1.00	1.00	1.00	1.00	1.00	1.00	1.00	1.00	1.00	1.00	1.00
Upstream Filter(I)	1.00	0.00	1.00	1.00	0.00	0.00	1.00	0.00	1.00	1.00	1.00	1.00
Uniform Delay (d), s/veh	14.6	0.0	14.2	15.0	0.0	0.0	14.9	0.0	7.4	18.8	11.0	10.3
Incr Delay (d2), s/veh	0.3	0.0	0.3	0.4	0.0	0.0	3.6	0.0	0.7	78.2	0.6	0.0
Initial Q Delay(d3),s/veh	0.0	0.0	0.0	0.0	0.0	0.0	0.0	0.0	0.0	0.0	0.0	0.0
%ile BackOfQ(50%),veh/ln	0.9	0.0	0.4	1.0	0.0	0.0	2.4	0.0	2.2	0.2	1.1	0.1
LnGrp Delay(d),s/veh	14.9	0.0	14.5	15.5	0.0	0.0	18.5	0.0	8.1	97.0	11.5	10.3
LnGrp LOS	B		B	B			B		A	F	B	B
Approach Vol, veh/h		129			95			519			140	
Approach Delay, s/veh		14.8			15.5			12.5			14.5	
Approach LOS		B			B			B			B	

Timer	1	2	3	4	5	6	7	8
Assigned Phs	1	2		4	5	6		8
Phs Duration (G+Y+Rc), s	5.2	22.2		10.4	11.3	16.0		10.4
Change Period (Y+Rc), s	5.0	6.0		5.0	5.0	6.0		5.0
Max Green Setting (Gmax), s	15.0	79.0		24.0	30.0	64.0		24.0
Max Q Clear Time (g_c+I1), s	2.1	6.4		3.7	6.4	4.0		4.8
Green Ext Time (p_c), s	0.0	4.1		0.5	0.6	1.6		0.4

Intersection Summary	
HCM 2010 Ctrl Delay	13.5
HCM 2010 LOS	B

Movement	EBL	EBT	EBR	WBL	WBT	WBR	NBL	NBT	NBR	SBL	SBT	SBR
Lane Configurations												
Traffic Volume (veh/h)	58	3	163	84	18	13	123	453	13	9	432	61
Future Volume (veh/h)	58	3	163	84	18	13	123	453	13	9	432	61
Number	7	4	14	3	8	18	5	2	12	1	6	16
Initial Q (Qb), veh	0	0	0	0	0	0	0	0	0	0	0	0
Ped-Bike Adj(A_pbT)	0.98		0.97	0.98		0.97	1.00		1.00	1.00		0.99
Parking Bus, Adj	1.00	1.00	1.00	1.00	1.00	1.00	1.00	1.00	1.00	1.00	1.00	1.00
Adj Sat Flow, veh/h/ln	1900	1863	1863	1863	1863	1900	1863	1863	1863	1863	1863	1863
Adj Flow Rate, veh/h	63	3	22	91	20	2	134	492	0	10	470	25
Adj No. of Lanes	0	1	1	1	1	0	1	1	1	1	1	1
Peak Hour Factor	0.92	0.92	0.92	0.92	0.92	0.92	0.92	0.92	0.92	0.92	0.92	0.92
Percent Heavy Veh, %	2	2	2	2	2	2	2	2	2	2	2	2
Cap, veh/h	403	16	304	363	327	33	444	809	687	384	648	546
Arrive On Green	0.20	0.20	0.20	0.20	0.20	0.20	0.09	0.43	0.00	0.01	0.35	0.35
Sat Flow, veh/h	1240	79	1543	1351	1662	166	1774	1863	1583	1774	1863	1570
Grp Volume(v), veh/h	66	0	22	91	0	22	134	492	0	10	470	25
Grp Sat Flow(s),veh/h/ln	1320	0	1543	1351	0	1828	1774	1863	1583	1774	1863	1570
Q Serve(g_s), s	1.7	0.0	0.5	2.7	0.0	0.4	2.0	9.0	0.0	0.2	9.8	0.5
Cycle Q Clear(g_c), s	2.1	0.0	0.5	4.9	0.0	0.4	2.0	9.0	0.0	0.2	9.8	0.5
Prop In Lane	0.95		1.00	1.00		0.09	1.00		1.00	1.00		1.00
Lane Grp Cap(c), veh/h	419	0	304	363	0	360	444	809	687	384	648	546
V/C Ratio(X)	0.16	0.00	0.07	0.25	0.00	0.06	0.30	0.61	0.00	0.03	0.73	0.05
Avail Cap(c_a), veh/h	921	0	871	859	0	1031	877	2144	1822	971	2144	1806
HCM Platoon Ratio	1.00	1.00	1.00	1.00	1.00	1.00	1.00	1.00	1.00	1.00	1.00	1.00
Upstream Filter(I)	1.00	0.00	1.00	1.00	0.00	1.00	1.00	1.00	0.00	1.00	1.00	1.00
Uniform Delay (d), s/veh	15.3	0.0	14.5	17.2	0.0	14.5	8.5	9.6	0.0	9.6	12.6	9.6
Incr Delay (d2), s/veh	0.2	0.0	0.1	0.4	0.0	0.1	0.4	0.7	0.0	0.0	1.6	0.0
Initial Q Delay(d3),s/veh	0.0	0.0	0.0	0.0	0.0	0.0	0.0	0.0	0.0	0.0	0.0	0.0
%ile BackOfQ(50%),veh/ln	0.7	0.0	0.2	1.0	0.0	0.2	1.0	4.7	0.0	0.1	5.2	0.2
LnGrp Delay(d),s/veh	15.4	0.0	14.6	17.6	0.0	14.5	8.8	10.4	0.0	9.6	14.2	9.6
LnGrp LOS	B		B	B		B	A	B		A	B	A
Approach Vol, veh/h		88			113			626			505	
Approach Delay, s/veh		15.2			17.0			10.1			13.9	
Approach LOS		B			B			B			B	

Timer	1	2	3	4	5	6	7	8
Assigned Phs	1	2		4	5	6		8
Phs Duration (G+Y+Rc), s	5.3	25.2		13.7	9.2	21.4		13.7
Change Period (Y+Rc), s	5.0	6.0		5.0	5.0	6.0		5.0
Max Green Setting (Gmax), s	15.0	51.0		25.0	15.0	51.0		25.0
Max Q Clear Time (g_c+I1), s	2.2	11.0		4.1	4.0	11.8		6.9
Green Ext Time (p_c), s	0.0	3.4		0.4	0.2	3.3		0.3

Intersection Summary	
HCM 2010 Ctrl Delay	12.4
HCM 2010 LOS	B

Movement	EBL	EBT	EBR	WBL	WBT	WBR	NBL	NBT	NBR	SBL	SBT	SBR
Lane Configurations												
Traffic Volume (veh/h)	39	1	113	5	1	4	52	527	11	5	612	28
Future Volume (veh/h)	39	1	113	5	1	4	52	527	11	5	612	28
Number	7	4	14	3	8	18	5	2	12	1	6	16
Initial Q (Qb), veh	0	0	0	0	0	0	0	0	0	0	0	0
Ped-Bike Adj(A_pbT)	1.00		0.99	1.00		0.99	1.00		1.00	1.00		0.99
Parking Bus, Adj	1.00	1.00	1.00	1.00	1.00	1.00	1.00	1.00	1.00	1.00	1.00	1.00
Adj Sat Flow, veh/h/ln	1863	1863	1900	1863	1863	1863	1863	1863	1863	1863	1863	1863
Adj Flow Rate, veh/h	42	1	13	5	1	1	57	573	7	5	665	14
Adj No. of Lanes	1	1	0	1	1	1	1	1	1	1	1	1
Peak Hour Factor	0.92	0.92	0.92	0.92	0.92	0.92	0.92	0.92	0.92	0.92	0.92	0.92
Percent Heavy Veh, %	2	2	2	2	2	2	2	2	2	2	2	2
Cap, veh/h	62	14	182	10	175	147	72	899	764	7	831	701
Arrive On Green	0.03	0.12	0.12	0.01	0.09	0.09	0.04	0.48	0.48	0.00	0.45	0.45
Sat Flow, veh/h	1774	113	1472	1774	1863	1567	1774	1863	1583	1774	1863	1571
Grp Volume(v), veh/h	42	0	14	5	1	1	57	573	7	5	665	14
Grp Sat Flow(s),veh/h/ln	1774	0	1585	1774	1863	1567	1774	1863	1583	1774	1863	1571
Q Serve(g_s), s	1.2	0.0	0.4	0.1	0.0	0.0	1.7	12.0	0.1	0.1	16.0	0.3
Cycle Q Clear(g_c), s	1.2	0.0	0.4	0.1	0.0	0.0	1.7	12.0	0.1	0.1	16.0	0.3
Prop In Lane	1.00		0.93	1.00		1.00	1.00		1.00	1.00		1.00
Lane Grp Cap(c), veh/h	62	0	196	10	175	147	72	899	764	7	831	701
V/C Ratio(X)	0.68	0.00	0.07	0.53	0.01	0.01	0.79	0.64	0.01	0.70	0.80	0.02
Avail Cap(c_a), veh/h	682	0	639	682	751	632	852	2326	1977	852	2326	1961
HCM Platoon Ratio	1.00	1.00	1.00	1.00	1.00	1.00	1.00	1.00	1.00	1.00	1.00	1.00
Upstream Filter(I)	1.00	0.00	1.00	1.00	1.00	1.00	1.00	1.00	1.00	1.00	1.00	1.00
Uniform Delay (d), s/veh	24.8	0.0	20.2	25.8	21.4	21.4	24.8	10.1	7.0	25.9	12.4	8.1
Incr Delay (d2), s/veh	12.1	0.0	0.2	38.4	0.0	0.0	17.4	0.8	0.0	80.2	1.8	0.0
Initial Q Delay(d3),s/veh	0.0	0.0	0.0	0.0	0.0	0.0	0.0	0.0	0.0	0.0	0.0	0.0
%ile BackOfQ(50%),veh/ln	0.8	0.0	0.2	0.2	0.0	0.0	1.2	6.2	0.1	0.2	8.6	0.1
LnGrp Delay(d),s/veh	36.9	0.0	20.3	64.3	21.4	21.4	42.1	10.8	7.0	106.1	14.3	8.1
LnGrp LOS	D		C	E	C	C	D	B	A	F	B	A
Approach Vol, veh/h		56			7			637			684	
Approach Delay, s/veh		32.8			52.0			13.6			14.8	
Approach LOS		C			D			B			B	

Timer	1	2	3	4	5	6	7	8
Assigned Phs	1	2	3	4	5	6	7	8
Phs Duration (G+Y+Rc), s	5.2	30.1	5.3	11.4	7.1	28.2	6.8	9.9
Change Period (Y+Rc), s	5.0	5.0	5.0	5.0	5.0	5.0	5.0	5.0
Max Green Setting (Gmax), s	25.0	65.0	20.0	21.0	25.0	65.0	20.0	21.0
Max Q Clear Time (g_c+I1), s	2.1	14.0	2.1	2.4	3.7	18.0	3.2	2.0
Green Ext Time (p_c), s	0.0	4.2	0.0	0.0	0.1	5.2	0.1	0.0

Intersection Summary	
HCM 2010 Ctrl Delay	15.2
HCM 2010 LOS	B

Movement	EBL	EBT	EBR	WBL	WBT	WBR	NBL	NBT	NBR	SBL	SBT	SBR
Lane Configurations												
Traffic Volume (veh/h)	30	7	433	17	3	0	287	592	38	8	691	10
Future Volume (veh/h)	30	7	433	17	3	0	287	592	38	8	691	10
Number	3	8	18	7	4	14	1	6	16	5	2	12
Initial Q (Qb), veh	0	0	0	0	0	0	0	0	0	0	0	0
Ped-Bike Adj(A_pbT)	0.99		1.00	0.99		1.00	1.00		1.00	1.00		1.00
Parking Bus, Adj	1.00	1.00	1.00	1.00	1.00	1.00	1.00	1.00	1.00	1.00	1.00	1.00
Adj Sat Flow, veh/h/ln	1900	1863	1863	1900	1863	1900	1863	1863	1900	1863	1863	1863
Adj Flow Rate, veh/h	33	8	0	18	3	0	312	643	40	9	751	3
Adj No. of Lanes	0	1	1	0	1	0	1	2	0	1	2	1
Peak Hour Factor	0.92	0.92	0.92	0.92	0.92	0.92	0.92	0.92	0.92	0.92	0.92	0.92
Percent Heavy Veh, %	2	2	2	2	2	2	2	2	2	2	2	2
Cap, veh/h	218	23	112	224	24	0	389	2069	129	13	1413	632
Arrive On Green	0.09	0.07	0.00	0.09	0.07	0.00	0.22	0.61	0.61	0.01	0.40	0.40
Sat Flow, veh/h	1183	326	1583	1200	338	0	1774	3385	210	1774	3539	1583
Grp Volume(v), veh/h	41	0	0	21	0	0	312	336	347	9	751	3
Grp Sat Flow(s),veh/h/ln	1508	0	1583	1538	0	0	1774	1770	1826	1774	1770	1583
Q Serve(g_s), s	0.6	0.0	0.0	0.0	0.0	0.0	8.0	4.4	4.4	0.2	7.8	0.1
Cycle Q Clear(g_c), s	1.1	0.0	0.0	0.5	0.0	0.0	8.0	4.4	4.4	0.2	7.8	0.1
Prop In Lane	0.80		1.00	0.86		0.00	1.00		0.12	1.00		1.00
Lane Grp Cap(c), veh/h	273	0	112	279	0	0	389	1082	1116	13	1413	632
V/C Ratio(X)	0.15	0.00	0.00	0.08	0.00	0.00	0.80	0.31	0.31	0.72	0.53	0.00
Avail Cap(c_a), veh/h	778	0	656	926	0	0	2426	2713	2799	2426	5427	2428
HCM Platoon Ratio	1.00	1.00	1.00	1.00	1.00	1.00	1.00	1.00	1.00	1.00	1.00	1.00
Upstream Filter(I)	1.00	0.00	0.00	1.00	0.00	0.00	1.00	1.00	1.00	1.00	1.00	1.00
Uniform Delay (d), s/veh	21.0	0.0	0.0	20.7	0.0	0.0	17.9	4.5	4.5	23.9	11.1	8.7
Incr Delay (d2), s/veh	0.3	0.0	0.0	0.1	0.0	0.0	1.5	0.3	0.3	24.6	0.7	0.0
Initial Q Delay(d3),s/veh	0.0	0.0	0.0	0.0	0.0	0.0	0.0	0.0	0.0	0.0	0.0	0.0
%ile BackOfQ(50%),veh/ln	0.5	0.0	0.0	0.3	0.0	0.0	4.1	2.2	2.2	0.2	3.9	0.0
LnGrp Delay(d),s/veh	21.2	0.0	0.0	20.8	0.0	0.0	19.3	4.8	4.8	48.5	11.7	8.7
LnGrp LOS	C			C			B	A	A	D	B	A
Approach Vol, veh/h		41			21			995			763	
Approach Delay, s/veh		21.2			20.8			9.4			12.1	
Approach LOS		C			C			A			B	

Timer	1	2	3	4	5	6	7	8
Assigned Phs	1	2		4	5	6		8
Phs Duration (G+Y+Rc), s	14.6	25.3		8.4	4.3	35.5		8.4
Change Period (Y+Rc), s	4.0	6.0		5.0	4.0	6.0		5.0
Max Green Setting (Gmax), s	66.0	74.0		25.0	66.0	74.0		20.0
Max Q Clear Time (g_c+I1), s	10.0	9.8		2.5	2.2	6.4		3.1
Green Ext Time (p_c), s	0.7	9.5		0.0	0.0	7.5		0.1

Intersection Summary	
HCM 2010 Ctrl Delay	10.9
HCM 2010 LOS	B

Movement	EBL	EBT	EBR	WBL	WBT	WBR	NBL	NBT	NBR	SBL	SBT	SBR
Lane Configurations												
Traffic Volume (veh/h)	16	0	33	8	1	6	64	974	16	14	1129	38
Future Volume (veh/h)	16	0	33	8	1	6	64	974	16	14	1129	38
Number	3	8	18	7	4	14	1	6	16	5	2	12
Initial Q (Qb), veh	0	0	0	0	0	0	0	0	0	0	0	0
Ped-Bike Adj(A_pbT)	1.00		1.00	1.00		1.00	1.00		1.00	1.00		1.00
Parking Bus, Adj	1.00	1.00	1.00	1.00	1.00	1.00	1.00	1.00	1.00	1.00	1.00	1.00
Adj Sat Flow, veh/h/ln	1900	1863	1863	1900	1863	1900	1863	1863	1900	1863	1863	1863
Adj Flow Rate, veh/h	17	0	1	9	1	2	70	1059	16	15	1227	26
Adj No. of Lanes	0	1	1	0	1	0	1	2	0	1	2	1
Peak Hour Factor	0.92	0.92	0.92	0.92	0.92	0.92	0.92	0.92	0.92	0.92	0.92	0.92
Percent Heavy Veh, %	2	2	2	2	2	2	2	2	2	2	2	2
Cap, veh/h	194	0	54	156	3	7	88	2420	37	20	2264	1013
Arrive On Green	0.05	0.00	0.03	0.05	0.03	0.03	0.05	0.68	0.68	0.01	0.64	0.64
Sat Flow, veh/h	1524	0	1583	913	101	203	1774	3569	54	1774	3539	1583
Grp Volume(v), veh/h	17	0	1	12	0	0	70	525	550	15	1227	26
Grp Sat Flow(s),veh/h/ln	1524	0	1583	1217	0	0	1774	1770	1853	1774	1770	1583
Q Serve(g_s), s	0.0	0.0	0.0	0.4	0.0	0.0	2.0	6.9	6.9	0.4	9.7	0.3
Cycle Q Clear(g_c), s	0.5	0.0	0.0	0.9	0.0	0.0	2.0	6.9	6.9	0.4	9.7	0.3
Prop In Lane	1.00		1.00	0.75		0.17	1.00		0.03	1.00		1.00
Lane Grp Cap(c), veh/h	224	0	54	190	0	0	88	1200	1257	20	2264	1013
V/C Ratio(X)	0.08	0.00	0.02	0.06	0.00	0.00	0.79	0.44	0.44	0.75	0.54	0.03
Avail Cap(c_a), veh/h	816	0	720	807	0	0	736	3007	3149	386	5314	2378
HCM Platoon Ratio	1.00	1.00	1.00	1.00	1.00	1.00	1.00	1.00	1.00	1.00	1.00	1.00
Upstream Filter(I)	1.00	0.00	1.00	1.00	0.00	0.00	1.00	1.00	1.00	1.00	1.00	1.00
Uniform Delay (d), s/veh	23.4	0.0	23.6	23.9	0.0	0.0	23.8	3.7	3.7	25.0	5.0	3.3
Incr Delay (d2), s/veh	0.1	0.0	0.1	0.1	0.0	0.0	5.9	0.5	0.5	18.6	0.4	0.0
Initial Q Delay(d3),s/veh	0.0	0.0	0.0	0.0	0.0	0.0	0.0	0.0	0.0	0.0	0.0	0.0
%ile BackOfQ(50%),veh/ln	0.2	0.0	0.0	0.2	0.0	0.0	1.1	3.4	3.5	0.3	4.7	0.1
LnGrp Delay(d),s/veh	23.4	0.0	23.7	23.9	0.0	0.0	29.7	4.3	4.2	43.5	5.5	3.4
LnGrp LOS	C		C	C			C	A	A	D	A	A
Approach Vol, veh/h		18			12			1145			1268	
Approach Delay, s/veh		23.4			23.9			5.8			5.9	
Approach LOS		C			C			A			A	

Timer	1	2	3	4	5	6	7	8
Assigned Phs	1	2		4	5	6		8
Phs Duration (G+Y+Rc), s	6.5	37.4		6.7	4.6	39.3		6.7
Change Period (Y+Rc), s	4.0	5.0		5.0	4.0	5.0		5.0
Max Green Setting (Gmax), s	21.0	76.0		23.0	11.0	86.0		23.0
Max Q Clear Time (g_c+I1), s	4.0	11.7		2.9	2.4	8.9		2.5
Green Ext Time (p_c), s	0.0	20.7		0.0	0.0	15.0		0.0

Intersection Summary	
HCM 2010 Ctrl Delay	6.1
HCM 2010 LOS	A

Movement	EBL	EBT	EBR	WBL	WBT	WBR	NBL	NBT	NBR	SBL	SBT	SBR
Lane Configurations												
Traffic Volume (veh/h)	45	4	30	39	13	41	102	965	54	24	1060	37
Future Volume (veh/h)	45	4	30	39	13	41	102	965	54	24	1060	37
Number	3	8	18	7	4	14	1	6	16	5	2	12
Initial Q (Qb), veh	0	0	0	0	0	0	0	0	0	0	0	0
Ped-Bike Adj(A_pbT)	1.00		1.00	1.00		1.00	1.00		1.00	1.00		1.00
Parking Bus, Adj	1.00	1.00	1.00	1.00	1.00	1.00	1.00	1.00	1.00	1.00	1.00	1.00
Adj Sat Flow, veh/h/ln	1900	1863	1863	1863	1863	1900	1863	1863	1863	1863	1863	1863
Adj Flow Rate, veh/h	49	4	1	42	14	2	111	1049	46	26	1152	29
Adj No. of Lanes	0	1	1	1	1	0	1	2	1	1	2	1
Peak Hour Factor	0.92	0.92	0.92	0.92	0.92	0.92	0.92	0.92	0.92	0.92	0.92	0.92
Percent Heavy Veh, %	2	2	2	2	2	2	2	2	2	2	2	2
Cap, veh/h	149	10	139	110	140	20	132	2809	1257	39	2622	1173
Arrive On Green	0.09	0.09	0.09	0.09	0.09	0.09	0.07	0.79	0.79	0.02	0.74	0.74
Sat Flow, veh/h	1188	119	1578	1402	1594	228	1774	3539	1583	1774	3539	1583
Grp Volume(v), veh/h	53	0	1	42	0	16	111	1049	46	26	1152	29
Grp Sat Flow(s),veh/h/ln	1307	0	1578	1402	0	1822	1774	1770	1583	1774	1770	1583
Q Serve(g_s), s	5.3	0.0	0.1	4.6	0.0	1.3	9.6	13.5	1.0	2.3	19.4	0.7
Cycle Q Clear(g_c), s	6.6	0.0	0.1	11.1	0.0	1.3	9.6	13.5	1.0	2.3	19.4	0.7
Prop In Lane	0.92		1.00	1.00		0.13	1.00		1.00	1.00		1.00
Lane Grp Cap(c), veh/h	159	0	139	110	0	160	132	2809	1257	39	2622	1173
V/C Ratio(X)	0.33	0.00	0.01	0.38	0.00	0.10	0.84	0.37	0.04	0.67	0.44	0.02
Avail Cap(c_a), veh/h	254	0	244	204	0	282	183	2809	1257	183	2622	1173
HCM Platoon Ratio	1.00	1.00	1.00	1.00	1.00	1.00	1.00	1.00	1.00	1.00	1.00	1.00
Upstream Filter(I)	1.00	0.00	1.00	1.00	0.00	1.00	0.83	0.83	0.83	1.00	1.00	1.00
Uniform Delay (d), s/veh	67.9	0.0	64.5	72.8	0.0	65.1	70.8	4.7	3.4	75.3	7.7	5.3
Incr Delay (d2), s/veh	1.2	0.0	0.0	2.2	0.0	0.3	13.7	0.3	0.0	7.4	0.5	0.0
Initial Q Delay(d3),s/veh	0.0	0.0	0.0	0.0	0.0	0.0	0.0	0.0	0.0	0.0	0.0	0.0
%ile BackOfQ(50%),veh/ln	2.2	0.0	0.0	1.8	0.0	0.6	5.2	6.7	0.4	1.2	9.6	0.3
LnGrp Delay(d),s/veh	69.2	0.0	64.5	75.0	0.0	65.3	84.5	5.0	3.4	82.7	8.2	5.3
LnGrp LOS	E		E	E		E	F	A	A	F	A	A
Approach Vol, veh/h		54			58			1206			1207	
Approach Delay, s/veh		69.1			72.3			12.3			9.8	
Approach LOS		E			E			B			A	

Timer	1	2	3	4	5	6	7	8
Assigned Phs	1	2		4	5	6		8
Phs Duration (G+Y+Rc), s	15.5	120.9		18.6	7.4	129.0		18.6
Change Period (Y+Rc), s	4.0	6.0		5.0	4.0	6.0		5.0
Max Green Setting (Gmax), s	16.0	100.0		24.0	16.0	100.0		24.0
Max Q Clear Time (g_c+I1), s	11.6	21.4		13.1	4.3	15.5		8.6
Green Ext Time (p_c), s	0.1	19.3		0.1	0.0	16.9		0.1

Intersection Summary	
HCM 2010 Ctrl Delay	13.7
HCM 2010 LOS	B

Movement	EBL	EBT	EBR	WBL	WBT	WBR	NBL	NBT	NBR	SBL	SBT	SBR
Lane Configurations												
Traffic Volume (veh/h)	115	6	214	10	10	8	410	1071	14	40	996	87
Future Volume (veh/h)	115	6	214	10	10	8	410	1071	14	40	996	87
Number	3	8	18	7	4	14	1	6	16	5	2	12
Initial Q (Qb), veh	0	0	0	0	0	0	0	0	0	0	0	0
Ped-Bike Adj(A_pbT)	1.00		0.98	1.00		0.98	1.00		1.00	1.00		1.00
Parking Bus, Adj	1.00	1.00	1.00	1.00	1.00	1.00	1.00	1.00	1.00	1.00	1.00	1.00
Adj Sat Flow, veh/h/ln	1900	1863	1863	1900	1863	1900	1863	1863	1900	1863	1863	1863
Adj Flow Rate, veh/h	125	7	84	11	11	4	446	1164	15	43	1083	49
Adj No. of Lanes	0	1	2	0	1	0	2	2	0	1	2	1
Peak Hour Factor	0.92	0.92	0.92	0.92	0.92	0.92	0.92	0.92	0.92	0.92	0.92	0.92
Percent Heavy Veh, %	2	2	2	2	2	2	2	2	2	2	2	2
Cap, veh/h	220	12	827	67	67	24	618	1885	24	137	1501	669
Arrive On Green	0.13	0.13	0.12	0.09	0.09	0.06	0.18	0.53	0.50	0.08	0.42	0.42
Sat Flow, veh/h	1684	94	2728	749	749	272	3442	3578	46	1774	3539	1577
Grp Volume(v), veh/h	132	0	84	26	0	0	446	576	603	43	1083	49
Grp Sat Flow(s),veh/h/ln	1779	0	1364	1771	0	0	1721	1770	1855	1774	1770	1577
Q Serve(g_s), s	6.3	0.0	2.0	1.2	0.0	0.0	11.1	20.8	20.8	2.1	23.1	1.7
Cycle Q Clear(g_c), s	6.3	0.0	2.0	1.2	0.0	0.0	11.1	20.8	20.8	2.1	23.1	1.7
Prop In Lane	0.95		1.00	0.42		0.15	1.00		0.02	1.00		1.00
Lane Grp Cap(c), veh/h	232	0	827	159	0	0	618	932	977	137	1501	669
V/C Ratio(X)	0.57	0.00	0.10	0.16	0.00	0.00	0.72	0.62	0.62	0.31	0.72	0.07
Avail Cap(c_a), veh/h	1095	0	2150	681	0	0	1627	4066	4261	410	7276	3241
HCM Platoon Ratio	1.00	1.00	1.00	1.00	1.00	1.00	1.00	1.00	1.00	1.00	1.00	1.00
Upstream Filter(I)	1.00	0.00	1.00	1.00	0.00	0.00	1.00	1.00	1.00	1.00	1.00	1.00
Uniform Delay (d), s/veh	37.1	0.0	23.0	38.5	0.0	0.0	35.2	15.1	15.1	39.7	21.7	15.6
Incr Delay (d2), s/veh	0.8	0.0	0.0	0.5	0.0	0.0	0.6	1.0	0.9	0.5	0.9	0.1
Initial Q Delay(d3),s/veh	0.0	0.0	0.0	0.0	0.0	0.0	0.0	0.0	0.0	0.0	0.0	0.0
%ile BackOfQ(50%),veh/ln	3.2	0.0	0.8	0.6	0.0	0.0	5.3	10.3	10.8	1.0	11.5	0.7
LnGrp Delay(d),s/veh	37.9	0.0	23.1	38.9	0.0	0.0	35.8	16.1	16.0	40.2	22.7	15.6
LnGrp LOS	D		C	D			D	B	B	D	C	B
Approach Vol, veh/h		216			26			1625			1175	
Approach Delay, s/veh		32.2			38.9			21.5			23.0	
Approach LOS		C			D			C			C	

Timer	1	2	3	4	5	6	7	8
Assigned Phs	1	2		4	5	6		8
Phs Duration (G+Y+Rc), s	20.3	42.6		12.2	11.0	51.9		15.9
Change Period (Y+Rc), s	6.0	6.0		7.0	6.0	6.0		7.0
Max Green Setting (Gmax), s	41.0	185.0		32.0	19.0	207.0		53.0
Max Q Clear Time (g_c+I1), s	13.1	25.1		3.2	4.1	22.8		8.3
Green Ext Time (p_c), s	1.2	11.5		0.1	0.0	11.0		0.6

Intersection Summary	
HCM 2010 Ctrl Delay	23.0
HCM 2010 LOS	C

Movement	EBL	EBT	EBR	WBL	WBT	WBR	NBL	NBT	NBR	SBL	SBT	SBR
Lane Configurations												
Traffic Volume (veh/h)	2	1	4	56	0	39	3	1485	86	25	1190	4
Future Volume (veh/h)	2	1	4	56	0	39	3	1485	86	25	1190	4
Number	3	8	18	7	4	14	1	6	16	5	2	12
Initial Q (Qb), veh	0	0	0	0	0	0	0	0	0	0	0	0
Ped-Bike Adj(A_pbT)	0.98		0.97	0.98		0.97	1.00		1.00	1.00		1.00
Parking Bus, Adj	1.00	1.00	1.00	1.00	1.00	1.00	1.00	1.00	1.00	1.00	1.00	1.00
Adj Sat Flow, veh/h/ln	1900	1863	1900	1863	1863	1900	1863	1863	1900	1863	1863	1900
Adj Flow Rate, veh/h	2	1	1	61	0	1	3	1614	91	27	1293	4
Adj No. of Lanes	0	1	0	1	1	0	1	2	0	1	2	0
Peak Hour Factor	0.92	0.92	0.92	0.92	0.92	0.92	0.92	0.92	0.92	0.92	0.92	0.92
Percent Heavy Veh, %	2	2	2	2	2	2	2	2	2	2	2	2
Cap, veh/h	94	46	34	172	0	134	7	2697	151	63	2980	9
Arrive On Green	0.09	0.09	0.08	0.09	0.00	0.08	0.00	0.79	0.78	0.04	0.82	0.82
Sat Flow, veh/h	635	533	389	1376	0	1542	1774	3407	191	1774	3619	11
Grp Volume(v), veh/h	4	0	0	61	0	1	3	834	871	27	632	665
Grp Sat Flow(s),veh/h/ln	1557	0	0	1376	0	1542	1774	1770	1828	1774	1770	1861
Q Serve(g_s), s	0.0	0.0	0.0	5.6	0.0	0.1	0.2	26.0	26.6	2.1	13.7	13.7
Cycle Q Clear(g_c), s	0.3	0.0	0.0	5.9	0.0	0.1	0.2	26.0	26.6	2.1	13.7	13.7
Prop In Lane	0.50		0.25	1.00		1.00	1.00		0.10	1.00		0.01
Lane Grp Cap(c), veh/h	174	0	0	172	0	134	7	1401	1448	63	1457	1532
V/C Ratio(X)	0.02	0.00	0.00	0.36	0.00	0.01	0.43	0.60	0.60	0.43	0.43	0.43
Avail Cap(c_a), veh/h	302	0	0	288	0	264	101	1401	1448	101	1457	1532
HCM Platoon Ratio	1.00	1.00	1.00	1.00	1.00	1.00	1.00	1.00	1.00	1.00	1.00	1.00
Upstream Filter(I)	1.00	0.00	0.00	1.00	0.00	1.00	0.77	0.77	0.77	1.00	1.00	1.00
Uniform Delay (d), s/veh	58.6	0.0	0.0	61.0	0.0	58.9	69.6	5.7	5.8	66.1	3.4	3.4
Incr Delay (d2), s/veh	0.1	0.0	0.0	1.2	0.0	0.0	11.5	1.4	1.4	1.7	0.9	0.9
Initial Q Delay(d3),s/veh	0.0	0.0	0.0	0.0	0.0	0.0	0.0	0.0	0.0	0.0	0.0	0.0
%ile BackOfQ(50%),veh/ln	0.1	0.0	0.0	2.3	0.0	0.0	0.1	13.1	13.7	1.1	7.1	7.4
LnGrp Delay(d),s/veh	58.7	0.0	0.0	62.2	0.0	58.9	81.1	7.2	7.3	67.8	4.3	4.3
LnGrp LOS	E			E		E	F	A	A	E	A	A
Approach Vol, veh/h		4			62			1708			1324	
Approach Delay, s/veh		58.7			62.2			7.4			5.6	
Approach LOS		E			E			A			A	

Timer	1	2	3	4	5	6	7	8
Assigned Phs	1	2		4	5	6		8
Phs Duration (G+Y+Rc), s	4.6	119.3		16.2	9.0	114.8		16.2
Change Period (Y+Rc), s	4.0	5.0		5.0	4.0	5.0		5.0
Max Green Setting (Gmax), s	8.0	95.0		23.0	8.0	95.0		23.0
Max Q Clear Time (g_c+I1), s	2.2	15.7		7.9	4.1	28.6		2.3
Green Ext Time (p_c), s	0.0	21.4		0.1	0.0	35.5		0.0

Intersection Summary	
HCM 2010 Ctrl Delay	7.8
HCM 2010 LOS	A

Movement	EBL	EBT	EBR	WBL	WBT	WBR	NBL	NBT	NBR	SBL	SBT	SBR
Lane Configurations												
Traffic Volume (veh/h)	81	4	3	101	15	13	2	1471	16	6	1059	167
Future Volume (veh/h)	81	4	3	101	15	13	2	1471	16	6	1059	167
Number	3	8	18	7	4	14	1	6	16	5	2	12
Initial Q (Qb), veh	0	0	0	0	0	0	0	0	0	0	0	0
Ped-Bike Adj(A_pbT)	1.00		1.00	1.00		1.00	1.00		1.00	1.00		1.00
Parking Bus, Adj	1.00	1.00	1.00	1.00	1.00	1.00	1.00	1.00	1.00	1.00	1.00	1.00
Adj Sat Flow, veh/h/ln	1900	1863	1900	1900	1863	1900	1863	1863	1900	1863	1863	1863
Adj Flow Rate, veh/h	88	4	2	110	16	11	2	1599	17	7	1151	130
Adj No. of Lanes	0	1	0	0	1	0	1	2	0	1	2	1
Peak Hour Factor	0.92	0.92	0.92	0.92	0.92	0.92	0.92	0.92	0.92	0.92	0.92	0.92
Percent Heavy Veh, %	2	2	2	2	2	2	2	2	2	2	2	2
Cap, veh/h	207	9	3	194	20	14	3	2825	30	9	2800	1251
Arrive On Green	0.11	0.11	0.10	0.11	0.11	0.10	0.00	0.79	0.78	0.01	0.79	0.79
Sat Flow, veh/h	1388	82	32	1308	190	131	1774	3588	38	1774	3539	1581
Grp Volume(v), veh/h	94	0	0	137	0	0	2	788	828	7	1151	130
Grp Sat Flow(s),veh/h/ln	1503	0	0	1629	0	0	1774	1770	1856	1774	1770	1581
Q Serve(g_s), s	0.0	0.0	0.0	2.5	0.0	0.0	0.1	20.5	20.5	0.5	12.1	2.2
Cycle Q Clear(g_c), s	7.0	0.0	0.0	9.5	0.0	0.0	0.1	20.5	20.5	0.5	12.1	2.2
Prop In Lane	0.94		0.02	0.80		0.08	1.00		0.02	1.00		1.00
Lane Grp Cap(c), veh/h	219	0	0	229	0	0	3	1394	1462	9	2800	1251
V/C Ratio(X)	0.43	0.00	0.00	0.60	0.00	0.00	0.70	0.57	0.57	0.76	0.41	0.10
Avail Cap(c_a), veh/h	430	0	0	449	0	0	118	1394	1462	118	2800	1251
HCM Platoon Ratio	1.00	1.00	1.00	1.00	1.00	1.00	1.00	1.00	1.00	1.00	1.00	1.00
Upstream Filter(I)	1.00	0.00	0.00	1.00	0.00	0.00	0.78	0.78	0.78	0.91	0.91	0.91
Uniform Delay (d), s/veh	50.9	0.0	0.0	51.9	0.0	0.0	59.9	4.9	4.9	59.6	3.9	2.9
Incr Delay (d2), s/veh	1.3	0.0	0.0	2.5	0.0	0.0	62.7	1.3	1.2	33.9	0.4	0.2
Initial Q Delay(d3),s/veh	0.0	0.0	0.0	0.0	0.0	0.0	0.0	0.0	0.0	0.0	0.0	0.0
%ile BackOfQ(50%),veh/ln	3.1	0.0	0.0	4.6	0.0	0.0	0.1	10.4	10.9	0.3	5.9	1.0
LnGrp Delay(d),s/veh	52.2	0.0	0.0	54.4	0.0	0.0	122.6	6.2	6.1	93.5	4.3	3.0
LnGrp LOS	D			D			F	A	A	F	A	A
Approach Vol, veh/h		94			137			1618			1288	
Approach Delay, s/veh		52.2			54.4			6.3			4.6	
Approach LOS		D			D			A			A	

Timer	1	2	3	4	5	6	7	8
Assigned Phs	1	2		4	5	6		8
Phs Duration (G+Y+Rc), s	4.2	98.9		16.9	4.6	98.5		16.9
Change Period (Y+Rc), s	4.0	5.0		5.0	4.0	5.0		5.0
Max Green Setting (Gmax), s	8.0	68.0		30.0	8.0	68.0		30.0
Max Q Clear Time (g_c+I1), s	2.1	14.1		11.5	2.5	22.5		9.0
Green Ext Time (p_c), s	0.0	26.7		0.4	0.0	33.0		0.3

Intersection Summary	
HCM 2010 Ctrl Delay	9.1
HCM 2010 LOS	A

Movement	EBL	EBT	EBR	WBL	WBT	WBR	NBL	NBT	NBR	SBL	SBT	SBR
Lane Configurations												
Traffic Volume (veh/h)	95	27	19	141	23	29	23	1353	71	7	1103	62
Future Volume (veh/h)	95	27	19	141	23	29	23	1353	71	7	1103	62
Number	3	8	18	7	4	14	1	6	16	5	2	12
Initial Q (Qb), veh	0	0	0	0	0	0	0	0	0	0	0	0
Ped-Bike Adj(A_pbT)	0.98		0.98	0.99		0.98	1.00		1.00	1.00		1.00
Parking Bus, Adj	1.00	1.00	1.00	1.00	1.00	1.00	1.00	1.00	1.00	1.00	1.00	1.00
Adj Sat Flow, veh/h/ln	1900	1863	1863	1863	1863	1900	1863	1863	1900	1863	1863	1900
Adj Flow Rate, veh/h	103	29	3	153	25	4	25	1471	75	8	1199	65
Adj No. of Lanes	0	1	1	1	1	0	1	2	0	1	2	0
Peak Hour Factor	0.92	0.92	0.92	0.92	0.92	0.92	0.92	0.92	0.92	0.92	0.92	0.92
Percent Heavy Veh, %	2	2	2	2	2	2	2	2	2	2	2	2
Cap, veh/h	194	42	227	259	229	37	31	2612	133	10	2562	139
Arrive On Green	0.15	0.15	0.15	0.15	0.15	0.14	0.04	1.00	1.00	0.01	0.75	0.74
Sat Flow, veh/h	1016	286	1554	1359	1563	250	1774	3427	174	1774	3415	185
Grp Volume(v), veh/h	132	0	3	153	0	29	25	757	789	8	621	643
Grp Sat Flow(s),veh/h/ln	1302	0	1554	1359	0	1813	1774	1770	1832	1774	1770	1830
Q Serve(g_s), s	12.3	0.0	0.2	0.0	0.0	1.9	2.0	0.0	0.0	0.6	18.9	19.0
Cycle Q Clear(g_c), s	14.2	0.0	0.2	14.2	0.0	1.9	2.0	0.0	0.0	0.6	18.9	19.0
Prop In Lane	0.78		1.00	1.00		0.14	1.00		0.10	1.00		0.10
Lane Grp Cap(c), veh/h	236	0	227	259	0	265	31	1349	1396	10	1328	1373
V/C Ratio(X)	0.56	0.00	0.01	0.59	0.00	0.11	0.80	0.56	0.56	0.79	0.47	0.47
Avail Cap(c_a), veh/h	314	0	311	332	0	363	139	1349	1396	139	1328	1373
HCM Platoon Ratio	1.00	1.00	1.00	1.00	1.00	1.00	2.00	2.00	2.00	1.00	1.00	1.00
Upstream Filter(I)	1.00	0.00	1.00	1.00	0.00	1.00	0.73	0.73	0.73	0.91	0.91	0.91
Uniform Delay (d), s/veh	58.0	0.0	51.1	57.1	0.0	51.9	67.3	0.0	0.0	69.5	6.7	6.8
Incr Delay (d2), s/veh	2.1	0.0	0.0	2.2	0.0	0.2	12.0	1.2	1.2	35.0	1.1	1.0
Initial Q Delay(d3),s/veh	0.0	0.0	0.0	0.0	0.0	0.0	0.0	0.0	0.0	0.0	0.0	0.0
%ile BackOfQ(50%),veh/ln	5.0	0.0	0.1	5.8	0.0	1.0	1.1	0.5	0.5	0.4	9.5	9.9
LnGrp Delay(d),s/veh	60.1	0.0	51.1	59.2	0.0	52.1	79.2	1.2	1.2	104.5	7.8	7.8
LnGrp LOS	E		D	E		D	E	A	A	F	A	A
Approach Vol, veh/h		135			182			1571			1272	
Approach Delay, s/veh		59.9			58.1			2.5			8.4	
Approach LOS		E			E			A			A	

Timer	1	2	3	4	5	6	7	8
Assigned Phs	1	2		4	5	6		8
Phs Duration (G+Y+Rc), s	6.5	109.0		24.5	4.8	110.7		24.5
Change Period (Y+Rc), s	4.0	5.0		5.0	4.0	5.0		5.0
Max Green Setting (Gmax), s	11.0	88.0		27.0	11.0	88.0		27.0
Max Q Clear Time (g_c+I1), s	4.0	21.0		16.2	2.6	2.0		16.2
Green Ext Time (p_c), s	0.0	19.9		0.5	0.0	32.0		0.3

Intersection Summary	
HCM 2010 Ctrl Delay	10.5
HCM 2010 LOS	B

Movement	EBL	EBT	EBR	WBL	WBT	WBR	NBL	NBT	NBR	SBL	SBT	SBR
Lane Configurations												
Traffic Volume (veh/h)	13	95	45	115	60	430	36	968	164	275	940	17
Future Volume (veh/h)	13	95	45	115	60	430	36	968	164	275	940	17
Number	7	4	14	3	8	18	1	6	16	5	2	12
Initial Q (Qb), veh	0	0	0	0	0	0	0	0	0	0	0	0
Ped-Bike Adj(A_pbT)	0.98		0.98	0.99		0.99	1.00		1.00	1.00		1.00
Parking Bus, Adj	1.00	1.00	1.00	1.00	1.00	1.00	1.00	1.00	1.00	1.00	1.00	1.00
Adj Sat Flow, veh/h/ln	1900	1863	1863	1863	1863	1863	1863	1863	1863	1863	1863	1900
Adj Flow Rate, veh/h	14	103	2	125	65	124	39	1052	114	299	1022	17
Adj No. of Lanes	0	1	1	1	1	1	1	2	1	1	2	0
Peak Hour Factor	0.92	0.92	0.92	0.92	0.92	0.92	0.92	0.92	0.92	0.92	0.92	0.92
Percent Heavy Veh, %	2	2	2	2	2	2	2	2	2	2	2	2
Cap, veh/h	42	180	167	251	402	337	50	1835	818	320	2388	40
Arrive On Green	0.11	0.11	0.11	0.08	0.22	0.22	0.03	0.52	0.52	0.36	1.00	1.00
Sat Flow, veh/h	126	1662	1544	1774	1863	1564	1774	3539	1577	1774	3562	59
Grp Volume(v), veh/h	117	0	2	125	65	124	39	1052	114	299	508	531
Grp Sat Flow(s),veh/h/ln	1788	0	1544	1774	1863	1564	1774	1770	1577	1774	1770	1852
Q Serve(g_s), s	2.5	0.0	0.2	8.5	4.0	9.5	3.1	28.5	5.3	22.8	0.0	0.0
Cycle Q Clear(g_c), s	8.5	0.0	0.2	8.5	4.0	9.5	3.1	28.5	5.3	22.8	0.0	0.0
Prop In Lane	0.12		1.00	1.00		1.00	1.00		1.00	1.00		0.03
Lane Grp Cap(c), veh/h	223	0	167	251	402	337	50	1835	818	320	1186	1242
V/C Ratio(X)	0.53	0.00	0.01	0.50	0.16	0.37	0.78	0.57	0.14	0.94	0.43	0.43
Avail Cap(c_a), veh/h	320	0	254	251	506	424	177	1835	818	431	1186	1242
HCM Platoon Ratio	1.00	1.00	1.00	1.00	1.00	1.00	1.00	1.00	1.00	2.00	2.00	2.00
Upstream Filter(I)	1.00	0.00	1.00	1.00	1.00	1.00	0.79	0.79	0.79	0.83	0.83	0.83
Uniform Delay (d), s/veh	59.4	0.0	55.7	48.5	44.6	46.8	67.6	23.1	17.5	44.0	0.0	0.0
Incr Delay (d2), s/veh	1.9	0.0	0.0	1.5	0.2	0.7	7.3	1.0	0.3	18.2	0.9	0.9
Initial Q Delay(d3),s/veh	0.0	0.0	0.0	0.0	0.0	0.0	0.0	0.0	0.0	0.0	0.0	0.0
%ile BackOfQ(50%),veh/ln	4.4	0.0	0.1	4.2	2.1	4.2	1.6	14.1	2.3	12.7	0.3	0.3
LnGrp Delay(d),s/veh	61.3	0.0	55.7	50.0	44.8	47.5	74.9	24.1	17.8	62.1	0.9	0.9
LnGrp LOS	E		E	D	D	D	E	C	B	E	A	A
Approach Vol, veh/h		119			314			1205			1338	
Approach Delay, s/veh		61.2			47.9			25.2			14.6	
Approach LOS		E			D			C			B	

Timer	1	2	3	4	5	6	7	8
Assigned Phs	1	2	3	4	5	6		8
Phs Duration (G+Y+Rc), s	8.0	97.9	15.0	19.2	29.2	76.6		34.2
Change Period (Y+Rc), s	4.0	5.0	5.0	5.0	4.0	5.0		5.0
Max Green Setting (Gmax), s	14.0	75.0	10.0	22.0	34.0	55.0		37.0
Max Q Clear Time (g_c+I1), s	5.1	2.0	10.5	10.5	24.8	30.5		11.5
Green Ext Time (p_c), s	0.0	14.0	0.0	0.3	0.5	12.4		0.8

Intersection Summary	
HCM 2010 Ctrl Delay	24.3
HCM 2010 LOS	C

Notes

APPENDIX C

LEVEL OF SERVICE CALCULATIONS

- Existing PM Peak

HCM 2010 Signalized Intersection Summary
1: Napilihau Street

08/09/2017

Movement	EBL	EBT	EBR	WBL	WBT	WBR	NBL	NBT	NBR	SBL	SBT	SBR
Lane Configurations												
Traffic Volume (veh/h)	53	8	345	36	14	3	352	194	22	2	252	72
Future Volume (veh/h)	53	8	345	36	14	3	352	194	22	2	252	72
Number	7	4	14	3	8	18	5	2	12	1	6	16
Initial Q (Qb), veh	0	0	0	0	0	0	0	0	0	0	0	0
Ped-Bike Adj(A_pbT)	1.00		1.00	1.00		1.00	1.00		1.00	1.00		1.00
Parking Bus, Adj	1.00	1.00	1.00	1.00	1.00	1.00	1.00	1.00	1.00	1.00	1.00	1.00
Adj Sat Flow, veh/h/ln	1900	1863	1863	1900	1863	1900	1863	1863	1900	1863	1863	1863
Adj Flow Rate, veh/h	58	9	23	39	15	1	383	211	21	2	274	19
Adj No. of Lanes	0	1	1	0	1	0	1	1	0	1	1	1
Peak Hour Factor	0.92	0.92	0.92	0.92	0.92	0.92	0.92	0.92	0.92	0.92	0.92	0.92
Percent Heavy Veh, %	2	2	2	2	2	2	2	2	2	2	2	2
Cap, veh/h	295	35	178	221	64	3	477	874	87	4	479	407
Arrive On Green	0.11	0.11	0.11	0.11	0.11	0.11	0.27	0.52	0.52	0.00	0.26	0.26
Sat Flow, veh/h	1275	313	1583	731	567	24	1774	1667	166	1774	1863	1583
Grp Volume(v), veh/h	67	0	23	55	0	0	383	0	232	2	274	19
Grp Sat Flow(s),veh/h/ln	1588	0	1583	1322	0	0	1774	0	1833	1774	1863	1583
Q Serve(g_s), s	0.0	0.0	0.6	0.6	0.0	0.0	8.9	0.0	3.1	0.0	5.7	0.4
Cycle Q Clear(g_c), s	1.5	0.0	0.6	2.1	0.0	0.0	8.9	0.0	3.1	0.0	5.7	0.4
Prop In Lane	0.87		1.00	0.71		0.02	1.00		0.09	1.00		1.00
Lane Grp Cap(c), veh/h	331	0	178	288	0	0	477	0	961	4	479	407
V/C Ratio(X)	0.20	0.00	0.13	0.19	0.00	0.00	0.80	0.00	0.24	0.50	0.57	0.05
Avail Cap(c_a), veh/h	949	0	858	924	0	0	1202	0	3271	601	2692	2288
HCM Platoon Ratio	1.00	1.00	1.00	1.00	1.00	1.00	1.00	1.00	1.00	1.00	1.00	1.00
Upstream Filter(I)	1.00	0.00	1.00	1.00	0.00	0.00	1.00	0.00	1.00	1.00	1.00	1.00
Uniform Delay (d), s/veh	18.1	0.0	17.7	18.2	0.0	0.0	15.1	0.0	5.7	22.1	14.3	12.4
Incr Delay (d2), s/veh	0.3	0.0	0.3	0.3	0.0	0.0	3.2	0.0	0.3	73.1	2.3	0.1
Initial Q Delay(d3),s/veh	0.0	0.0	0.0	0.0	0.0	0.0	0.0	0.0	0.0	0.0	0.0	0.0
%ile BackOfQ(50%),veh/ln	0.8	0.0	0.3	0.7	0.0	0.0	4.8	0.0	1.6	0.1	3.2	0.2
LnGrp Delay(d),s/veh	18.4	0.0	18.0	18.5	0.0	0.0	18.3	0.0	6.0	95.1	16.6	12.5
LnGrp LOS	B		B	B			B		A	F	B	B
Approach Vol, veh/h		90			55			615			295	
Approach Delay, s/veh		18.3			18.5			13.7			16.9	
Approach LOS		B			B			B			B	

Timer	1	2	3	4	5	6	7	8
Assigned Phs	1	2		4	5	6		8
Phs Duration (G+Y+Rc), s	5.1	29.2		10.0	16.9	17.4		10.0
Change Period (Y+Rc), s	5.0	6.0		5.0	5.0	6.0		5.0
Max Green Setting (Gmax), s	15.0	79.0		24.0	30.0	64.0		24.0
Max Q Clear Time (g_c+I1), s	2.0	5.1		3.5	10.9	7.7		4.1
Green Ext Time (p_c), s	0.0	3.0		0.3	1.1	3.7		0.2

Intersection Summary	
HCM 2010 Ctrl Delay	15.2
HCM 2010 LOS	B

Movement	EBL	EBT	EBR	WBL	WBT	WBR	NBL	NBT	NBR	SBL	SBT	SBR
Lane Configurations												
Traffic Volume (veh/h)	68	18	135	41	14	7	179	493	40	21	496	75
Future Volume (veh/h)	68	18	135	41	14	7	179	493	40	21	496	75
Number	7	4	14	3	8	18	5	2	12	1	6	16
Initial Q (Qb), veh	0	0	0	0	0	0	0	0	0	0	0	0
Ped-Bike Adj(A_pbT)	1.00		1.00	1.00		1.00	1.00		1.00	1.00		0.99
Parking Bus, Adj	1.00	1.00	1.00	1.00	1.00	1.00	1.00	1.00	1.00	1.00	1.00	1.00
Adj Sat Flow, veh/h/ln	1900	1863	1863	1863	1863	1900	1863	1863	1863	1863	1863	1863
Adj Flow Rate, veh/h	74	20	12	45	15	0	195	536	0	23	539	32
Adj No. of Lanes	0	1	1	1	1	0	1	1	1	1	1	1
Peak Hour Factor	0.92	0.92	0.92	0.92	0.92	0.92	0.92	0.92	0.92	0.92	0.92	0.92
Percent Heavy Veh, %	2	2	2	2	2	2	2	2	2	2	2	2
Cap, veh/h	284	50	193	258	227	0	480	900	765	437	738	624
Arrive On Green	0.12	0.12	0.12	0.12	0.12	0.00	0.10	0.48	0.00	0.02	0.40	0.40
Sat Flow, veh/h	1087	409	1583	1372	1863	0	1774	1863	1583	1774	1863	1575
Grp Volume(v), veh/h	94	0	12	45	15	0	195	536	0	23	539	32
Grp Sat Flow(s),veh/h/ln	1496	0	1583	1372	1863	0	1774	1863	1583	1774	1863	1575
Q Serve(g_s), s	2.1	0.0	0.3	1.3	0.3	0.0	2.5	8.8	0.0	0.3	10.4	0.5
Cycle Q Clear(g_c), s	2.4	0.0	0.3	3.8	0.3	0.0	2.5	8.8	0.0	0.3	10.4	0.5
Prop In Lane	0.79		1.00	1.00		0.00	1.00		1.00	1.00		1.00
Lane Grp Cap(c), veh/h	334	0	193	258	227	0	480	900	765	437	738	624
V/C Ratio(X)	0.28	0.00	0.06	0.17	0.07	0.00	0.41	0.60	0.00	0.05	0.73	0.05
Avail Cap(c_a), veh/h	1025	0	936	902	1101	0	925	2246	1909	1036	2246	1899
HCM Platoon Ratio	1.00	1.00	1.00	1.00	1.00	1.00	1.00	1.00	1.00	1.00	1.00	1.00
Upstream Filter(I)	1.00	0.00	1.00	1.00	1.00	0.00	1.00	1.00	0.00	1.00	1.00	1.00
Uniform Delay (d), s/veh	17.4	0.0	16.4	19.2	16.4	0.0	7.5	7.9	0.0	7.7	10.9	7.9
Incr Delay (d2), s/veh	0.5	0.0	0.1	0.3	0.1	0.0	0.6	0.6	0.0	0.0	1.4	0.0
Initial Q Delay(d3),s/veh	0.0	0.0	0.0	0.0	0.0	0.0	0.0	0.0	0.0	0.0	0.0	0.0
%ile BackOfQ(50%),veh/ln	1.1	0.0	0.1	0.5	0.2	0.0	1.3	4.6	0.0	0.2	5.5	0.2
LnGrp Delay(d),s/veh	17.8	0.0	16.6	19.5	16.6	0.0	8.0	8.6	0.0	7.8	12.3	7.9
LnGrp LOS	B		B	B	B		A	A		A	B	A
Approach Vol, veh/h		106			60			731			594	
Approach Delay, s/veh		17.7			18.8			8.4			11.9	
Approach LOS		B			B			A			B	

Timer	1	2	3	4	5	6	7	8
Assigned Phs	1	2		4	5	6		8
Phs Duration (G+Y+Rc), s	5.7	26.4		10.1	9.4	22.7		10.1
Change Period (Y+Rc), s	5.0	6.0		5.0	5.0	6.0		5.0
Max Green Setting (Gmax), s	15.0	51.0		25.0	15.0	51.0		25.0
Max Q Clear Time (g_c+I1), s	2.3	10.8		4.4	4.5	12.4		5.8
Green Ext Time (p_c), s	0.0	3.8		0.5	0.4	3.9		0.1

Intersection Summary	
HCM 2010 Ctrl Delay	10.9
HCM 2010 LOS	B

Movement	EBL	EBT	EBR	WBL	WBT	WBR	NBL	NBT	NBR	SBL	SBT	SBR
Lane Configurations												
Traffic Volume (veh/h)	53	3	88	9	5	6	151	703	7	1	670	70
Future Volume (veh/h)	53	3	88	9	5	6	151	703	7	1	670	70
Number	7	4	14	3	8	18	5	2	12	1	6	16
Initial Q (Qb), veh	0	0	0	0	0	0	0	0	0	0	0	0
Ped-Bike Adj(A_pbT)	1.00		0.98	1.00		1.00	1.00		1.00	1.00		1.00
Parking Bus, Adj	1.00	1.00	1.00	1.00	1.00	1.00	1.00	1.00	1.00	1.00	1.00	1.00
Adj Sat Flow, veh/h/ln	1863	1863	1900	1863	1863	1863	1863	1863	1863	1863	1863	1863
Adj Flow Rate, veh/h	58	3	7	10	5	0	164	764	5	1	728	35
Adj No. of Lanes	1	1	0	1	1	1	1	1	1	1	1	1
Peak Hour Factor	0.92	0.92	0.92	0.92	0.92	0.92	0.92	0.92	0.92	0.92	0.92	0.92
Percent Heavy Veh, %	2	2	2	2	2	2	2	2	2	2	2	2
Cap, veh/h	75	63	147	18	180	153	210	1075	914	3	856	726
Arrive On Green	0.04	0.13	0.13	0.01	0.10	0.00	0.12	0.58	0.58	0.00	0.46	0.46
Sat Flow, veh/h	1774	488	1139	1774	1863	1583	1774	1863	1583	1774	1863	1580
Grp Volume(v), veh/h	58	0	10	10	5	0	164	764	5	1	728	35
Grp Sat Flow(s),veh/h/ln	1774	0	1628	1774	1863	1583	1774	1863	1583	1774	1863	1580
Q Serve(g_s), s	2.3	0.0	0.4	0.4	0.2	0.0	6.3	20.8	0.1	0.0	24.5	0.9
Cycle Q Clear(g_c), s	2.3	0.0	0.4	0.4	0.2	0.0	6.3	20.8	0.1	0.0	24.5	0.9
Prop In Lane	1.00		0.70	1.00		1.00	1.00		1.00	1.00		1.00
Lane Grp Cap(c), veh/h	75	0	210	18	180	153	210	1075	914	3	856	726
V/C Ratio(X)	0.78	0.00	0.05	0.56	0.03	0.00	0.78	0.71	0.01	0.40	0.85	0.05
Avail Cap(c_a), veh/h	502	0	484	502	554	471	628	1714	1457	628	1714	1454
HCM Platoon Ratio	1.00	1.00	1.00	1.00	1.00	1.00	1.00	1.00	1.00	1.00	1.00	1.00
Upstream Filter(I)	1.00	0.00	1.00	1.00	1.00	0.00	1.00	1.00	1.00	1.00	1.00	1.00
Uniform Delay (d), s/veh	33.5	0.0	27.0	34.8	28.9	0.0	30.2	10.7	6.3	35.3	16.9	10.6
Incr Delay (d2), s/veh	15.7	0.0	0.1	24.5	0.1	0.0	6.2	0.9	0.0	79.3	2.5	0.0
Initial Q Delay(d3),s/veh	0.0	0.0	0.0	0.0	0.0	0.0	0.0	0.0	0.0	0.0	0.0	0.0
%ile BackOfQ(50%),veh/ln	1.4	0.0	0.2	0.3	0.1	0.0	3.5	10.7	0.0	0.1	13.1	0.4
LnGrp Delay(d),s/veh	49.2	0.0	27.1	59.3	29.0	0.0	36.4	11.6	6.3	114.5	19.4	10.6
LnGrp LOS	D		C	E	C		D	B	A	F	B	B
Approach Vol, veh/h		68			15			933			764	
Approach Delay, s/veh		45.9			49.2			15.9			19.1	
Approach LOS		D			D			B			B	

Timer	1	2	3	4	5	6	7	8
Assigned Phs	1	2	3	4	5	6	7	8
Phs Duration (G+Y+Rc), s	5.1	45.8	5.7	14.1	13.4	37.5	8.0	11.8
Change Period (Y+Rc), s	5.0	5.0	5.0	5.0	5.0	5.0	5.0	5.0
Max Green Setting (Gmax), s	25.0	65.0	20.0	21.0	25.0	65.0	20.0	21.0
Max Q Clear Time (g_c+I1), s	2.0	22.8	2.4	2.4	8.3	26.5	4.3	2.2
Green Ext Time (p_c), s	0.0	6.4	0.0	0.0	0.4	6.0	0.1	0.0

Intersection Summary	
HCM 2010 Ctrl Delay	18.7
HCM 2010 LOS	B

Movement	EBL	EBT	EBR	WBL	WBT	WBR	NBL	NBT	NBR	SBL	SBT	SBR
Lane Configurations												
Traffic Volume (veh/h)	70	4	546	75	10	7	548	757	6	1	708	16
Future Volume (veh/h)	70	4	546	75	10	7	548	757	6	1	708	16
Number	3	8	18	7	4	14	1	6	16	5	2	12
Initial Q (Qb), veh	0	0	0	0	0	0	0	0	0	0	0	0
Ped-Bike Adj(A_pbT)	1.00		1.00	1.00		1.00	1.00		1.00	1.00		1.00
Parking Bus, Adj	1.00	1.00	1.00	1.00	1.00	1.00	1.00	1.00	1.00	1.00	1.00	1.00
Adj Sat Flow, veh/h/ln	1900	1863	1863	1900	1863	1900	1863	1863	1900	1863	1863	1863
Adj Flow Rate, veh/h	76	4	0	82	11	6	596	823	7	1	770	4
Adj No. of Lanes	0	1	1	0	1	0	1	2	0	1	2	1
Peak Hour Factor	0.92	0.92	0.92	0.92	0.92	0.92	0.92	0.92	0.92	0.92	0.92	0.92
Percent Heavy Veh, %	2	2	2	2	2	2	2	2	2	2	2	2
Cap, veh/h	231	7	141	206	16	9	652	2543	22	2	1206	540
Arrive On Green	0.10	0.09	0.00	0.10	0.09	0.09	0.37	0.71	0.71	0.00	0.34	0.34
Sat Flow, veh/h	1524	80	1583	1317	177	96	1774	3596	31	1774	3539	1583
Grp Volume(v), veh/h	80	0	0	99	0	0	596	405	425	1	770	4
Grp Sat Flow(s),veh/h/ln	1604	0	1583	1590	0	0	1774	1770	1857	1774	1770	1583
Q Serve(g_s), s	0.0	0.0	0.0	1.0	0.0	0.0	23.7	6.4	6.4	0.0	13.6	0.1
Cycle Q Clear(g_c), s	3.1	0.0	0.0	4.1	0.0	0.0	23.7	6.4	6.4	0.0	13.6	0.1
Prop In Lane	0.95		1.00	0.83		0.06	1.00		0.02	1.00		1.00
Lane Grp Cap(c), veh/h	260	0	141	252	0	0	652	1252	1314	2	1206	540
V/C Ratio(X)	0.31	0.00	0.00	0.39	0.00	0.00	0.91	0.32	0.32	0.42	0.64	0.01
Avail Cap(c_a), veh/h	514	0	428	614	0	0	1703	1651	1733	1703	3302	1477
HCM Platoon Ratio	1.00	1.00	1.00	1.00	1.00	1.00	1.00	1.00	1.00	1.00	1.00	1.00
Upstream Filter(I)	1.00	0.00	0.00	1.00	0.00	0.00	1.00	1.00	1.00	1.00	1.00	1.00
Uniform Delay (d), s/veh	31.7	0.0	0.0	32.1	0.0	0.0	22.3	4.1	4.1	36.9	20.5	16.1
Incr Delay (d2), s/veh	0.7	0.0	0.0	1.0	0.0	0.0	2.2	0.3	0.3	37.7	1.2	0.0
Initial Q Delay(d3),s/veh	0.0	0.0	0.0	0.0	0.0	0.0	0.0	0.0	0.0	0.0	0.0	0.0
%ile BackOfQ(50%),veh/ln	1.6	0.0	0.0	2.0	0.0	0.0	11.8	3.1	3.3	0.0	6.8	0.1
LnGrp Delay(d),s/veh	32.3	0.0	0.0	33.1	0.0	0.0	24.5	4.4	4.4	74.6	21.8	16.1
LnGrp LOS	C			C			C	A	A	E	C	B
Approach Vol, veh/h		80			99			1426			775	
Approach Delay, s/veh		32.3			33.1			12.8			21.8	
Approach LOS		C			C			B			C	

Timer	1	2	3	4	5	6	7	8
Assigned Phs	1	2		4	5	6		8
Phs Duration (G+Y+Rc), s	31.2	31.2		11.6	4.1	58.3		11.6
Change Period (Y+Rc), s	4.0	6.0		5.0	4.0	6.0		5.0
Max Green Setting (Gmax), s	71.0	69.0		25.0	71.0	69.0		20.0
Max Q Clear Time (g_c+I1), s	25.7	15.6		6.1	2.0	8.4		5.1
Green Ext Time (p_c), s	1.5	9.6		0.3	0.0	9.7		0.2

Intersection Summary	
HCM 2010 Ctrl Delay	17.2
HCM 2010 LOS	B

Movement	EBL	EBT	EBR	WBL	WBT	WBR	NBL	NBT	NBR	SBL	SBT	SBR
Lane Configurations												
Traffic Volume (veh/h)	20	1	63	14	0	4	68	1272	10	8	1332	33
Future Volume (veh/h)	20	1	63	14	0	4	68	1272	10	8	1332	33
Number	3	8	18	7	4	14	1	6	16	5	2	12
Initial Q (Qb), veh	0	0	0	0	0	0	0	0	0	0	0	0
Ped-Bike Adj(A_pbT)	0.97		0.96	0.97		0.96	1.00		0.99	1.00		1.00
Parking Bus, Adj	1.00	1.00	1.00	1.00	1.00	1.00	1.00	1.00	1.00	1.00	1.00	1.00
Adj Sat Flow, veh/h/ln	1900	1863	1863	1900	1863	1900	1863	1863	1900	1863	1863	1863
Adj Flow Rate, veh/h	22	1	2	15	0	1	74	1383	11	9	1448	23
Adj No. of Lanes	0	1	1	0	1	0	1	2	0	1	2	1
Peak Hour Factor	0.92	0.92	0.92	0.92	0.92	0.92	0.92	0.92	0.92	0.92	0.92	0.92
Percent Heavy Veh, %	2	2	2	2	2	2	2	2	2	2	2	2
Cap, veh/h	247	9	166	225	3	9	95	2475	20	12	2268	1015
Arrive On Green	0.12	0.11	0.11	0.12	0.00	0.11	0.05	0.69	0.69	0.01	0.64	0.64
Sat Flow, veh/h	1355	81	1518	1160	26	79	1774	3599	29	1774	3539	1583
Grp Volume(v), veh/h	23	0	2	16	0	0	74	680	714	9	1448	23
Grp Sat Flow(s),veh/h/ln	1435	0	1518	1265	0	0	1774	1770	1858	1774	1770	1583
Q Serve(g_s), s	0.0	0.0	0.1	0.6	0.0	0.0	2.9	13.9	13.9	0.4	17.8	0.4
Cycle Q Clear(g_c), s	0.8	0.0	0.1	1.4	0.0	0.0	2.9	13.9	13.9	0.4	17.8	0.4
Prop In Lane	0.96		1.00	0.94		0.06	1.00		0.02	1.00		1.00
Lane Grp Cap(c), veh/h	276	0	166	254	0	0	95	1217	1277	12	2268	1015
V/C Ratio(X)	0.08	0.00	0.01	0.06	0.00	0.00	0.78	0.56	0.56	0.74	0.64	0.02
Avail Cap(c_a), veh/h	569	0	489	545	0	0	522	2131	2236	273	3766	1685
HCM Platoon Ratio	1.00	1.00	1.00	1.00	1.00	1.00	1.00	1.00	1.00	1.00	1.00	1.00
Upstream Filter(I)	1.00	0.00	1.00	1.00	0.00	0.00	1.00	1.00	1.00	1.00	1.00	1.00
Uniform Delay (d), s/veh	28.3	0.0	28.4	28.7	0.0	0.0	33.4	5.7	5.7	35.4	7.8	4.7
Incr Delay (d2), s/veh	0.0	0.0	0.0	0.0	0.0	0.0	5.0	0.9	0.8	27.1	0.6	0.0
Initial Q Delay(d3),s/veh	0.0	0.0	0.0	0.0	0.0	0.0	0.0	0.0	0.0	0.0	0.0	0.0
%ile BackOfQ(50%),veh/ln	0.4	0.0	0.0	0.3	0.0	0.0	1.6	6.9	7.2	0.3	8.6	0.2
LnGrp Delay(d),s/veh	28.3	0.0	28.4	28.7	0.0	0.0	38.4	6.5	6.5	62.5	8.4	4.7
LnGrp LOS	C		C	C			D	A	A	E	A	A
Approach Vol, veh/h		25			16			1468			1480	
Approach Delay, s/veh		28.3			28.7			8.1			8.7	
Approach LOS		C			C			A			A	

Timer	1	2	3	4	5	6	7	8
Assigned Phs	1	2		4	5	6		8
Phs Duration (G+Y+Rc), s	7.8	50.8		12.8	4.5	54.1		12.8
Change Period (Y+Rc), s	4.0	5.0		5.0	4.0	5.0		5.0
Max Green Setting (Gmax), s	21.0	76.0		23.0	11.0	86.0		23.0
Max Q Clear Time (g_c+I1), s	4.9	19.8		3.4	2.4	15.9		2.8
Green Ext Time (p_c), s	0.0	26.0		0.0	0.0	24.2		0.0

Intersection Summary	
HCM 2010 Ctrl Delay	8.7
HCM 2010 LOS	A

Movement	EBL	EBT	EBR	WBL	WBT	WBR	NBL	NBT	NBR	SBL	SBT	SBR
Lane Configurations												
Traffic Volume (veh/h)	64	5	164	63	4	40	121	1208	55	29	1332	83
Future Volume (veh/h)	64	5	164	63	4	40	121	1208	55	29	1332	83
Number	3	8	18	7	4	14	1	6	16	5	2	12
Initial Q (Qb), veh	0	0	0	0	0	0	0	0	0	0	0	0
Ped-Bike Adj(A_pbT)	0.99		0.98	0.99		0.98	1.00		1.00	1.00		1.00
Parking Bus, Adj	1.00	1.00	1.00	1.00	1.00	1.00	1.00	1.00	1.00	1.00	1.00	1.00
Adj Sat Flow, veh/h/ln	1900	1863	1863	1863	1863	1900	1863	1863	1863	1863	1863	1863
Adj Flow Rate, veh/h	70	5	3	68	4	1	132	1313	45	32	1448	65
Adj No. of Lanes	0	1	1	1	1	0	1	2	1	1	2	1
Peak Hour Factor	0.92	0.92	0.92	0.92	0.92	0.92	0.92	0.92	0.92	0.92	0.92	0.92
Percent Heavy Veh, %	2	2	2	2	2	2	2	2	2	2	2	2
Cap, veh/h	196	13	186	139	171	43	153	2712	1212	41	2490	1114
Arrive On Green	0.13	0.12	0.12	0.12	0.12	0.12	0.09	0.77	0.77	0.02	0.70	0.70
Sat Flow, veh/h	1290	105	1559	1385	1434	359	1774	3539	1582	1774	3539	1583
Grp Volume(v), veh/h	75	0	3	68	0	5	132	1313	45	32	1448	65
Grp Sat Flow(s),veh/h/ln	1395	0	1559	1385	0	1793	1774	1770	1582	1774	1770	1583
Q Serve(g_s), s	7.9	0.0	0.3	7.9	0.0	0.4	12.1	22.7	1.1	3.0	33.9	2.1
Cycle Q Clear(g_c), s	8.3	0.0	0.3	16.3	0.0	0.4	12.1	22.7	1.1	3.0	33.9	2.1
Prop In Lane	0.93		1.00	1.00		0.20	1.00		1.00	1.00		1.00
Lane Grp Cap(c), veh/h	217	0	186	139	0	214	153	2712	1212	41	2490	1114
V/C Ratio(X)	0.35	0.00	0.02	0.49	0.00	0.02	0.86	0.48	0.04	0.77	0.58	0.06
Avail Cap(c_a), veh/h	254	0	227	175	0	261	226	2712	1212	108	2490	1114
HCM Platoon Ratio	1.00	1.00	1.00	1.00	1.00	1.00	1.00	1.00	1.00	1.00	1.00	1.00
Upstream Filter(I)	1.00	0.00	1.00	1.00	0.00	1.00	0.78	0.78	0.78	1.00	1.00	1.00
Uniform Delay (d), s/veh	67.3	0.0	64.1	75.2	0.0	64.1	74.4	7.2	4.6	80.1	12.3	7.6
Incr Delay (d2), s/veh	0.9	0.0	0.0	2.6	0.0	0.0	11.5	0.5	0.0	10.8	1.0	0.1
Initial Q Delay(d3),s/veh	0.0	0.0	0.0	0.0	0.0	0.0	0.0	0.0	0.0	0.0	0.0	0.0
%ile BackOfQ(50%),veh/ln	3.2	0.0	0.1	3.1	0.0	0.2	6.4	11.1	0.5	1.6	16.8	1.0
LnGrp Delay(d),s/veh	68.2	0.0	64.1	77.8	0.0	64.2	86.0	7.6	4.7	90.9	13.3	7.7
LnGrp LOS	E		E	E		E	F	A	A	F	B	A
Approach Vol, veh/h		78			73			1490			1545	
Approach Delay, s/veh		68.1			76.9			14.5			14.6	
Approach LOS		E			E			B			B	

Timer	1	2	3	4	5	6	7	8
Assigned Phs	1	2		4	5	6		8
Phs Duration (G+Y+Rc), s	18.2	122.1		24.7	7.8	132.4		24.7
Change Period (Y+Rc), s	4.0	6.0		5.0	4.0	6.0		5.0
Max Green Setting (Gmax), s	21.0	105.0		24.0	10.0	116.0		24.0
Max Q Clear Time (g_c+I1), s	14.1	35.9		18.3	5.0	24.7		10.3
Green Ext Time (p_c), s	0.1	29.2		0.1	0.0	25.6		0.2

Intersection Summary	
HCM 2010 Ctrl Delay	17.3
HCM 2010 LOS	B

Movement	EBL	EBT	EBR	WBL	WBT	WBR	NBL	NBT	NBR	SBL	SBT	SBR
Lane Configurations												
Traffic Volume (veh/h)	265	2	597	13	0	4	374	1240	6	48	1416	120
Future Volume (veh/h)	265	2	597	13	0	4	374	1240	6	48	1416	120
Number	3	8	18	7	4	14	1	6	16	5	2	12
Initial Q (Qb), veh	0	0	0	0	0	0	0	0	0	0	0	0
Ped-Bike Adj(A_pbT)	1.00		0.99	1.00		0.96	1.00		1.00	1.00		1.00
Parking Bus, Adj	1.00	1.00	1.00	1.00	1.00	1.00	1.00	1.00	1.00	1.00	1.00	1.00
Adj Sat Flow, veh/h/ln	1900	1863	1863	1900	1863	1900	1863	1863	1900	1863	1863	1863
Adj Flow Rate, veh/h	288	2	453	14	0	1	407	1348	7	52	1539	94
Adj No. of Lanes	0	1	2	0	1	0	2	2	0	1	2	1
Peak Hour Factor	0.92	0.92	0.92	0.92	0.92	0.92	0.92	0.92	0.92	0.92	0.92	0.92
Percent Heavy Veh, %	2	2	2	2	2	2	2	2	2	2	2	2
Cap, veh/h	349	2	929	78	0	6	493	2216	12	91	1847	826
Arrive On Green	0.20	0.20	0.19	0.05	0.00	0.03	0.14	0.61	0.60	0.05	0.52	0.52
Sat Flow, veh/h	1762	12	2758	1638	0	117	3442	3610	19	1774	3539	1583
Grp Volume(v), veh/h	290	0	453	15	0	0	407	661	694	52	1539	94
Grp Sat Flow(s),veh/h/ln	1775	0	1379	1755	0	0	1721	1770	1859	1774	1770	1583
Q Serve(g_s), s	27.9	0.0	23.3	1.5	0.0	0.0	20.5	41.0	41.1	5.1	65.6	5.4
Cycle Q Clear(g_c), s	27.9	0.0	23.3	1.5	0.0	0.0	20.5	41.0	41.1	5.1	65.6	5.4
Prop In Lane	0.99		1.00	0.93		0.07	1.00		0.01	1.00		1.00
Lane Grp Cap(c), veh/h	351	0	929	83	0	0	493	1086	1141	91	1847	826
V/C Ratio(X)	0.83	0.00	0.49	0.18	0.00	0.00	0.83	0.61	0.61	0.57	0.83	0.11
Avail Cap(c_a), veh/h	557	0	1250	344	0	0	830	2074	2179	209	3711	1660
HCM Platoon Ratio	1.00	1.00	1.00	1.00	1.00	1.00	1.00	1.00	1.00	1.00	1.00	1.00
Upstream Filter(I)	1.00	0.00	1.00	1.00	0.00	0.00	1.00	1.00	1.00	1.00	1.00	1.00
Uniform Delay (d), s/veh	68.6	0.0	47.1	81.7	0.0	0.0	74.2	21.2	21.2	82.7	36.1	21.7
Incr Delay (d2), s/veh	2.8	0.0	0.1	0.4	0.0	0.0	1.4	0.8	0.8	2.1	1.5	0.1
Initial Q Delay(d3),s/veh	0.0	0.0	0.0	0.0	0.0	0.0	0.0	0.0	0.0	0.0	0.0	0.0
%ile BackOfQ(50%),veh/ln	14.0	0.0	8.9	0.7	0.0	0.0	9.9	20.2	21.3	2.6	32.4	2.4
LnGrp Delay(d),s/veh	71.4	0.0	47.3	82.1	0.0	0.0	75.6	22.0	22.0	84.8	37.5	21.8
LnGrp LOS	E		D	F			E	C	C	F	D	C
Approach Vol, veh/h		743			15			1762			1685	
Approach Delay, s/veh		56.7			82.1			34.4			38.1	
Approach LOS		E			F			C			D	

Timer	1	2	3	4	5	6	7	8
Assigned Phs	1	2		4	5	6		8
Phs Duration (G+Y+Rc), s	29.5	97.1		12.4	13.2	113.4		39.3
Change Period (Y+Rc), s	6.0	6.0		7.0	6.0	6.0		7.0
Max Green Setting (Gmax), s	41.0	185.0		32.0	19.0	207.0		53.0
Max Q Clear Time (g_c+I1), s	22.5	67.6		3.5	7.1	43.1		29.9
Green Ext Time (p_c), s	1.0	23.5		0.0	0.0	14.4		2.3

Intersection Summary	
HCM 2010 Ctrl Delay	40.0
HCM 2010 LOS	D

Movement	EBL	EBT	EBR	WBL	WBT	WBR	NBL	NBT	NBR	SBL	SBT	SBR
Lane Configurations												
Traffic Volume (veh/h)	7	0	4	85	2	53	9	1563	88	77	1953	4
Future Volume (veh/h)	7	0	4	85	2	53	9	1563	88	77	1953	4
Number	3	8	18	7	4	14	1	6	16	5	2	12
Initial Q (Qb), veh	0	0	0	0	0	0	0	0	0	0	0	0
Ped-Bike Adj(A_pbT)	1.00		1.00	1.00		1.00	1.00		1.00	1.00		1.00
Parking Bus, Adj	1.00	1.00	1.00	1.00	1.00	1.00	1.00	1.00	1.00	1.00	1.00	1.00
Adj Sat Flow, veh/h/ln	1900	1863	1900	1863	1863	1900	1863	1863	1900	1863	1863	1900
Adj Flow Rate, veh/h	8	0	1	92	2	3	10	1699	94	84	2123	4
Adj No. of Lanes	0	1	0	1	1	0	1	2	0	1	2	0
Peak Hour Factor	0.92	0.92	0.92	0.92	0.92	0.92	0.92	0.92	0.92	0.92	0.92	0.92
Percent Heavy Veh, %	2	2	2	2	2	2	2	2	2	2	2	2
Cap, veh/h	154	3	13	175	57	85	21	2608	143	110	2954	6
Arrive On Green	0.08	0.00	0.08	0.08	0.08	0.08	0.01	0.76	0.76	0.06	0.81	0.81
Sat Flow, veh/h	1224	36	157	1410	674	1011	1774	3412	188	1774	3624	7
Grp Volume(v), veh/h	9	0	0	92	0	5	10	876	917	84	1036	1091
Grp Sat Flow(s),veh/h/ln	1417	0	0	1410	0	1684	1774	1770	1830	1774	1770	1862
Q Serve(g_s), s	0.5	0.0	0.0	7.6	0.0	0.4	0.8	31.2	32.0	6.3	35.3	35.4
Cycle Q Clear(g_c), s	0.8	0.0	0.0	8.4	0.0	0.4	0.8	31.2	32.0	6.3	35.3	35.4
Prop In Lane	0.89		0.11	1.00		0.60	1.00		0.10	1.00		0.00
Lane Grp Cap(c), veh/h	170	0	0	175	0	142	21	1353	1399	110	1442	1517
V/C Ratio(X)	0.05	0.00	0.00	0.53	0.00	0.04	0.49	0.65	0.66	0.76	0.72	0.72
Avail Cap(c_a), veh/h	303	0	0	306	0	299	145	1353	1399	250	1442	1517
HCM Platoon Ratio	1.00	1.00	1.00	1.00	1.00	1.00	1.00	1.00	1.00	1.00	1.00	1.00
Upstream Filter(I)	1.00	0.00	0.00	1.00	0.00	1.00	0.73	0.73	0.73	1.00	1.00	1.00
Uniform Delay (d), s/veh	57.0	0.0	0.0	60.3	0.0	57.0	66.3	7.4	7.5	62.3	5.6	5.6
Incr Delay (d2), s/veh	0.1	0.0	0.0	2.4	0.0	0.1	4.8	1.8	1.8	4.1	3.1	3.0
Initial Q Delay(d3),s/veh	0.0	0.0	0.0	0.0	0.0	0.0	0.0	0.0	0.0	0.0	0.0	0.0
%ile BackOfQ(50%),veh/ln	0.3	0.0	0.0	3.5	0.0	0.2	0.4	15.5	16.5	3.2	17.9	18.8
LnGrp Delay(d),s/veh	57.1	0.0	0.0	62.8	0.0	57.1	71.1	9.2	9.3	66.4	8.7	8.5
LnGrp LOS	E			E		E	E	A	A	E	A	A
Approach Vol, veh/h		9			97			1803			2211	
Approach Delay, s/veh		57.1			62.5			9.6			10.8	
Approach LOS		E			E			A			B	

Timer	1	2	3	4	5	6	7	8
Assigned Phs	1	2		4	5	6		8
Phs Duration (G+Y+Rc), s	5.6	114.0		15.4	12.4	107.2		15.4
Change Period (Y+Rc), s	4.0	5.0		5.0	4.0	5.0		5.0
Max Green Setting (Gmax), s	11.0	87.0		23.0	19.0	79.0		23.0
Max Q Clear Time (g_c+I1), s	2.8	37.4		10.4	8.3	34.0		2.8
Green Ext Time (p_c), s	0.0	40.6		0.2	0.1	30.6		0.0

Intersection Summary	
HCM 2010 Ctrl Delay	11.6
HCM 2010 LOS	B

Movement	EBL	EBT	EBR	WBL	WBT	WBR	NBL	NBT	NBR	SBL	SBT	SBR
Lane Configurations												
Traffic Volume (veh/h)	160	11	8	59	5	7	5	1504	20	2	1646	293
Future Volume (veh/h)	160	11	8	59	5	7	5	1504	20	2	1646	293
Number	3	8	18	7	4	14	1	6	16	5	2	12
Initial Q (Qb), veh	0	0	0	0	0	0	0	0	0	0	0	0
Ped-Bike Adj(A_pbT)	1.00		1.00	1.00		1.00	1.00		1.00	1.00		1.00
Parking Bus, Adj	1.00	1.00	1.00	1.00	1.00	1.00	1.00	1.00	1.00	1.00	1.00	1.00
Adj Sat Flow, veh/h/ln	1900	1863	1900	1900	1863	1900	1863	1863	1900	1863	1863	1863
Adj Flow Rate, veh/h	174	12	7	64	5	5	5	1635	21	2	1789	242
Adj No. of Lanes	0	1	0	0	1	0	1	2	0	1	2	1
Peak Hour Factor	0.92	0.92	0.92	0.92	0.92	0.92	0.92	0.92	0.92	0.92	0.92	0.92
Percent Heavy Veh, %	2	2	2	2	2	2	2	2	2	2	2	2
Cap, veh/h	253	14	8	260	20	17	7	2719	35	3	2681	1200
Arrive On Green	0.15	0.15	0.14	0.15	0.15	0.14	0.01	1.00	1.00	0.00	0.76	0.76
Sat Flow, veh/h	1355	93	54	1408	137	112	1774	3578	46	1774	3539	1583
Grp Volume(v), veh/h	193	0	0	74	0	0	5	808	848	2	1789	242
Grp Sat Flow(s),veh/h/ln	1503	0	0	1656	0	0	1774	1770	1855	1774	1770	1583
Q Serve(g_s), s	11.5	0.0	0.0	0.0	0.0	0.0	0.4	0.0	0.0	0.2	33.4	5.9
Cycle Q Clear(g_c), s	16.7	0.0	0.0	5.2	0.0	0.0	0.4	0.0	0.0	0.2	33.4	5.9
Prop In Lane	0.90		0.04	0.86		0.07	1.00		0.02	1.00		1.00
Lane Grp Cap(c), veh/h	276	0	0	298	0	0	7	1345	1409	3	2681	1200
V/C Ratio(X)	0.70	0.00	0.00	0.25	0.00	0.00	0.74	0.60	0.60	0.70	0.67	0.20
Avail Cap(c_a), veh/h	379	0	0	401	0	0	105	1345	1409	105	2681	1200
HCM Platoon Ratio	1.00	1.00	1.00	1.00	1.00	1.00	2.00	2.00	2.00	1.00	1.00	1.00
Upstream Filter(I)	1.00	0.00	0.00	1.00	0.00	0.00	0.73	0.73	0.73	0.60	0.60	0.60
Uniform Delay (d), s/veh	55.6	0.0	0.0	51.0	0.0	0.0	66.9	0.0	0.0	67.4	8.0	4.7
Incr Delay (d2), s/veh	3.4	0.0	0.0	0.4	0.0	0.0	34.7	1.5	1.4	51.9	0.8	0.2
Initial Q Delay(d3),s/veh	0.0	0.0	0.0	0.0	0.0	0.0	0.0	0.0	0.0	0.0	0.0	0.0
%ile BackOfQ(50%),veh/ln	7.3	0.0	0.0	2.5	0.0	0.0	0.3	0.5	0.5	0.1	16.5	2.6
LnGrp Delay(d),s/veh	59.0	0.0	0.0	51.5	0.0	0.0	101.6	1.5	1.4	119.3	8.8	4.9
LnGrp LOS	E			D			F	A	A	F	A	A
Approach Vol, veh/h		193			74			1661			2033	
Approach Delay, s/veh		59.0			51.5			1.7			8.5	
Approach LOS		E			D			A			A	

Timer	1	2	3	4	5	6	7	8
Assigned Phs	1	2		4	5	6		8
Phs Duration (G+Y+Rc), s	4.5	106.3		24.2	4.2	106.6		24.2
Change Period (Y+Rc), s	4.0	5.0		5.0	4.0	5.0		5.0
Max Green Setting (Gmax), s	8.0	84.0		29.0	8.0	84.0		29.0
Max Q Clear Time (g_c+I1), s	2.4	35.4		7.2	2.2	2.0		18.7
Green Ext Time (p_c), s	0.0	41.3		0.2	0.0	50.7		0.5

Intersection Summary	
HCM 2010 Ctrl Delay	8.9
HCM 2010 LOS	A

Movement	EBL	EBT	EBR	WBL	WBT	WBR	NBL	NBT	NBR	SBL	SBT	SBR
Lane Configurations												
Traffic Volume (veh/h)	138	35	44	91	23	17	51	1352	103	23	1596	136
Future Volume (veh/h)	138	35	44	91	23	17	51	1352	103	23	1596	136
Number	3	8	18	7	4	14	1	6	16	5	2	12
Initial Q (Qb), veh	0	0	0	0	0	0	0	0	0	0	0	0
Ped-Bike Adj(A_pbT)	0.97		0.97	0.98		0.97	1.00		1.00	1.00		1.00
Parking Bus, Adj	1.00	1.00	1.00	1.00	1.00	1.00	1.00	1.00	1.00	1.00	1.00	1.00
Adj Sat Flow, veh/h/ln	1900	1863	1863	1863	1863	1900	1863	1863	1900	1863	1863	1900
Adj Flow Rate, veh/h	150	38	5	99	25	2	55	1470	109	25	1735	144
Adj No. of Lanes	0	1	1	1	1	0	1	2	0	1	2	0
Peak Hour Factor	0.92	0.92	0.92	0.92	0.92	0.92	0.92	0.92	0.92	0.92	0.92	0.92
Percent Heavy Veh, %	2	2	2	2	2	2	2	2	2	2	2	2
Cap, veh/h	223	44	256	294	283	23	70	2430	179	31	2335	191
Arrive On Green	0.17	0.17	0.17	0.17	0.17	0.16	0.08	1.00	1.00	0.02	0.71	0.70
Sat Flow, veh/h	1049	266	1538	1343	1698	136	1774	3342	247	1774	3312	272
Grp Volume(v), veh/h	188	0	5	99	0	27	55	775	804	25	917	962
Grp Sat Flow(s),veh/h/ln	1315	0	1538	1343	0	1834	1774	1770	1819	1774	1770	1814
Q Serve(g_s), s	17.4	0.0	0.4	0.0	0.0	1.7	4.1	0.0	0.0	1.9	42.8	45.0
Cycle Q Clear(g_c), s	19.1	0.0	0.4	8.2	0.0	1.7	4.1	0.0	0.0	1.9	42.8	45.0
Prop In Lane	0.80		1.00	1.00		0.07	1.00		0.14	1.00		0.15
Lane Grp Cap(c), veh/h	267	0	256	294	0	305	70	1287	1322	31	1248	1279
V/C Ratio(X)	0.70	0.00	0.02	0.34	0.00	0.09	0.78	0.60	0.61	0.80	0.74	0.75
Avail Cap(c_a), veh/h	336	0	330	359	0	394	105	1287	1322	105	1248	1279
HCM Platoon Ratio	1.00	1.00	1.00	1.00	1.00	1.00	2.00	2.00	2.00	1.00	1.00	1.00
Upstream Filter(I)	1.00	0.00	1.00	1.00	0.00	1.00	0.55	0.55	0.55	0.67	0.67	0.67
Uniform Delay (d), s/veh	55.7	0.0	47.0	50.3	0.0	47.6	61.6	0.0	0.0	66.1	12.2	12.6
Incr Delay (d2), s/veh	4.8	0.0	0.0	0.7	0.0	0.1	5.9	1.2	1.2	11.2	2.6	2.8
Initial Q Delay(d3),s/veh	0.0	0.0	0.0	0.0	0.0	0.0	0.0	0.0	0.0	0.0	0.0	0.0
%ile BackOfQ(50%),veh/ln	7.2	0.0	0.2	3.4	0.0	0.9	2.1	0.4	0.4	1.0	21.6	23.2
LnGrp Delay(d),s/veh	60.5	0.0	47.1	51.0	0.0	47.7	67.5	1.2	1.2	77.3	14.8	15.4
LnGrp LOS	E		D	D		D	E	A	A	E	B	B
Approach Vol, veh/h		193			126			1634			1904	
Approach Delay, s/veh		60.1			50.3			3.4			15.9	
Approach LOS		E			D			A			B	

Timer	1	2	3	4	5	6	7	8
Assigned Phs	1	2		4	5	6		8
Phs Duration (G+Y+Rc), s	9.3	99.2		26.5	6.4	102.1		26.5
Change Period (Y+Rc), s	4.0	5.0		5.0	4.0	5.0		5.0
Max Green Setting (Gmax), s	8.0	85.0		28.0	8.0	85.0		28.0
Max Q Clear Time (g_c+I1), s	6.1	47.0		10.2	3.9	2.0		21.1
Green Ext Time (p_c), s	0.0	28.7		0.4	0.0	33.3		0.4

Intersection Summary	
HCM 2010 Ctrl Delay	14.0
HCM 2010 LOS	B

Movement	EBL	EBT	EBR	WBL	WBT	WBR	NBL	NBT	NBR	SBL	SBT	SBR
Lane Configurations												
Traffic Volume (veh/h)	54	160	80	162	85	420	76	1048	254	381	1238	58
Future Volume (veh/h)	54	160	80	162	85	420	76	1048	254	381	1238	58
Number	7	4	14	3	8	18	1	6	16	5	2	12
Initial Q (Qb), veh	0	0	0	0	0	0	0	0	0	0	0	0
Ped-Bike Adj(A_pbT)	0.98		0.97	1.00		0.98	1.00		0.99	1.00		0.99
Parking Bus, Adj	1.00	1.00	1.00	1.00	1.00	1.00	1.00	1.00	1.00	1.00	1.00	1.00
Adj Sat Flow, veh/h/ln	1900	1863	1863	1863	1863	1863	1863	1863	1863	1863	1863	1900
Adj Flow Rate, veh/h	59	174	9	176	92	153	83	1139	197	414	1346	61
Adj No. of Lanes	0	1	1	1	1	1	1	2	1	1	2	0
Peak Hour Factor	0.92	0.92	0.92	0.92	0.92	0.92	0.92	0.92	0.92	0.92	0.92	0.92
Percent Heavy Veh, %	2	2	2	2	2	2	2	2	2	2	2	2
Cap, veh/h	93	211	256	244	532	444	105	1401	622	407	1953	88
Arrive On Green	0.17	0.17	0.17	0.09	0.29	0.29	0.06	0.40	0.40	0.46	1.00	1.00
Sat Flow, veh/h	357	1261	1532	1774	1863	1553	1774	3539	1571	1774	3447	156
Grp Volume(v), veh/h	233	0	9	176	92	153	83	1139	197	414	690	717
Grp Sat Flow(s),veh/h/ln	1618	0	1532	1774	1863	1553	1774	1770	1571	1774	1770	1834
Q Serve(g_s), s	16.3	0.0	0.7	10.8	5.0	10.5	6.2	38.7	11.7	31.0	0.0	0.0
Cycle Q Clear(g_c), s	18.8	0.0	0.7	10.8	5.0	10.5	6.2	38.7	11.7	31.0	0.0	0.0
Prop In Lane	0.25		1.00	1.00		1.00	1.00		1.00	1.00		0.09
Lane Grp Cap(c), veh/h	304	0	256	244	532	444	105	1401	622	407	1002	1039
V/C Ratio(X)	0.77	0.00	0.04	0.72	0.17	0.34	0.79	0.81	0.32	1.02	0.69	0.69
Avail Cap(c_a), veh/h	332	0	284	244	566	472	276	1401	622	407	1002	1039
HCM Platoon Ratio	1.00	1.00	1.00	1.00	1.00	1.00	1.00	1.00	1.00	2.00	2.00	2.00
Upstream Filter(I)	1.00	0.00	1.00	1.00	1.00	1.00	0.88	0.88	0.88	0.56	0.56	0.56
Uniform Delay (d), s/veh	54.5	0.0	47.1	41.7	36.2	38.2	62.7	36.3	28.2	36.5	0.0	0.0
Incr Delay (d2), s/veh	9.5	0.0	0.1	10.0	0.2	0.5	4.5	4.7	1.2	37.6	2.2	2.1
Initial Q Delay(d3),s/veh	0.0	0.0	0.0	0.0	0.0	0.0	0.0	0.0	0.0	0.0	0.0	0.0
%ile BackOfQ(50%),veh/ln	9.3	0.0	0.3	6.0	2.6	4.6	3.2	19.7	5.3	19.3	0.6	0.6
LnGrp Delay(d),s/veh	64.0	0.0	47.2	51.7	36.4	38.7	67.2	41.0	29.3	74.1	2.2	2.1
LnGrp LOS	E		D	D	D	D	E	D	C	F	A	A
Approach Vol, veh/h		242			421			1419			1821	
Approach Delay, s/veh		63.4			43.6			40.9			18.5	
Approach LOS		E			D			D			B	

Timer	1	2	3	4	5	6	7	8
Assigned Phs	1	2	3	4	5	6		8
Phs Duration (G+Y+Rc), s	12.0	80.5	16.0	26.6	35.0	57.4		42.6
Change Period (Y+Rc), s	4.0	5.0	5.0	5.0	4.0	5.0		5.0
Max Green Setting (Gmax), s	21.0	60.0	11.0	24.0	31.0	50.0		40.0
Max Q Clear Time (g_c+I1), s	8.2	2.0	12.8	20.8	33.0	40.7		12.5
Green Ext Time (p_c), s	0.1	23.4	0.0	0.3	0.0	6.9		1.1

Intersection Summary	
HCM 2010 Ctrl Delay	32.1
HCM 2010 LOS	C

Notes

APPENDIX C

LEVEL OF SERVICE CALCULATIONS

- Existing WE Peak

HCM 2010 Signalized Intersection Summary
1: Napilihau Street

08/09/2017

Movement	EBL	EBT	EBR	WBL	WBT	WBR	NBL	NBT	NBR	SBL	SBT	SBR
Lane Configurations												
Traffic Volume (veh/h)	39	22	305	25	28	12	250	276	19	10	251	87
Future Volume (veh/h)	39	22	305	25	28	12	250	276	19	10	251	87
Number	7	4	14	3	8	18	5	2	12	1	6	16
Initial Q (Qb), veh	0	0	0	0	0	0	0	0	0	0	0	0
Ped-Bike Adj(A_pbT)	0.99		0.99	0.99		0.99	1.00		1.00	1.00		1.00
Parking Bus, Adj	1.00	1.00	1.00	1.00	1.00	1.00	1.00	1.00	1.00	1.00	1.00	1.00
Adj Sat Flow, veh/h/ln	1900	1863	1863	1900	1863	1900	1863	1863	1900	1863	1863	1863
Adj Flow Rate, veh/h	42	24	30	27	30	6	272	300	19	11	273	29
Adj No. of Lanes	0	1	1	0	1	0	1	1	0	1	1	1
Peak Hour Factor	0.92	0.92	0.92	0.92	0.92	0.92	0.92	0.92	0.92	0.92	0.92	0.92
Percent Heavy Veh, %	2	2	2	2	2	2	2	2	2	2	2	2
Cap, veh/h	243	101	194	189	123	19	360	812	51	15	511	434
Arrive On Green	0.12	0.12	0.12	0.12	0.12	0.12	0.20	0.47	0.47	0.01	0.27	0.27
Sat Flow, veh/h	777	812	1567	493	988	156	1774	1733	110	1774	1863	1580
Grp Volume(v), veh/h	66	0	30	63	0	0	272	0	319	11	273	29
Grp Sat Flow(s),veh/h/ln	1589	0	1567	1637	0	0	1774	0	1843	1774	1863	1580
Q Serve(g_s), s	0.1	0.0	0.7	0.0	0.0	0.0	5.8	0.0	4.5	0.2	5.0	0.5
Cycle Q Clear(g_c), s	1.3	0.0	0.7	1.3	0.0	0.0	5.8	0.0	4.5	0.2	5.0	0.5
Prop In Lane	0.64		1.00	0.43		0.10	1.00		0.06	1.00		1.00
Lane Grp Cap(c), veh/h	344	0	194	331	0	0	360	0	864	15	511	434
V/C Ratio(X)	0.19	0.00	0.15	0.19	0.00	0.00	0.76	0.00	0.37	0.72	0.53	0.07
Avail Cap(c_a), veh/h	1056	0	937	1073	0	0	1326	0	3627	663	2970	2520
HCM Platoon Ratio	1.00	1.00	1.00	1.00	1.00	1.00	1.00	1.00	1.00	1.00	1.00	1.00
Upstream Filter(I)	1.00	0.00	1.00	1.00	0.00	0.00	1.00	0.00	1.00	1.00	1.00	1.00
Uniform Delay (d), s/veh	16.0	0.0	15.7	15.9	0.0	0.0	15.1	0.0	6.9	19.9	12.4	10.8
Incr Delay (d2), s/veh	0.3	0.0	0.4	0.3	0.0	0.0	3.3	0.0	0.6	47.3	1.8	0.1
Initial Q Delay(d3),s/veh	0.0	0.0	0.0	0.0	0.0	0.0	0.0	0.0	0.0	0.0	0.0	0.0
%ile BackOfQ(50%),veh/ln	0.7	0.0	0.3	0.7	0.0	0.0	3.1	0.0	2.4	0.3	2.8	0.3
LnGrp Delay(d),s/veh	16.2	0.0	16.1	16.2	0.0	0.0	18.3	0.0	7.4	67.1	14.2	10.9
LnGrp LOS	B		B	B			B		A	E	B	B
Approach Vol, veh/h		96			63			591			313	
Approach Delay, s/veh		16.2			16.2			12.4			15.8	
Approach LOS		B			B			B			B	

Timer	1	2	3	4	5	6	7	8
Assigned Phs	1	2		4	5	6		8
Phs Duration (G+Y+Rc), s	5.3	24.8		10.0	13.1	17.0		10.0
Change Period (Y+Rc), s	5.0	6.0		5.0	5.0	6.0		5.0
Max Green Setting (Gmax), s	15.0	79.0		24.0	30.0	64.0		24.0
Max Q Clear Time (g_c+I1), s	2.2	6.5		3.3	7.8	7.0		3.3
Green Ext Time (p_c), s	0.0	4.3		0.4	0.8	3.8		0.3

Intersection Summary	
HCM 2010 Ctrl Delay	14.0
HCM 2010 LOS	B

Movement	EBL	EBT	EBR	WBL	WBT	WBR	NBL	NBT	NBR	SBL	SBT	SBR
Lane Configurations												
Traffic Volume (veh/h)	52	16	176	35	15	5	118	375	22	12	414	55
Future Volume (veh/h)	52	16	176	35	15	5	118	375	22	12	414	55
Number	7	4	14	3	8	18	5	2	12	1	6	16
Initial Q (Qb), veh	0	0	0	0	0	0	0	0	0	0	0	0
Ped-Bike Adj(A_pbT)	0.98		0.98	0.99		0.98	1.00		1.00	1.00		1.00
Parking Bus, Adj	1.00	1.00	1.00	1.00	1.00	1.00	1.00	1.00	1.00	1.00	1.00	1.00
Adj Sat Flow, veh/h/ln	1900	1863	1863	1863	1863	1900	1863	1863	1863	1863	1863	1863
Adj Flow Rate, veh/h	57	17	21	38	16	1	128	408	0	13	450	22
Adj No. of Lanes	0	1	1	1	1	0	1	1	1	1	1	1
Peak Hour Factor	0.92	0.92	0.92	0.92	0.92	0.92	0.92	0.92	0.92	0.92	0.92	0.92
Percent Heavy Veh, %	2	2	2	2	2	2	2	2	2	2	2	2
Cap, veh/h	322	75	239	340	265	17	456	777	660	453	654	553
Arrive On Green	0.15	0.15	0.15	0.15	0.15	0.15	0.08	0.42	0.00	0.01	0.35	0.35
Sat Flow, veh/h	1010	489	1558	1346	1733	108	1774	1863	1583	1774	1863	1577
Grp Volume(v), veh/h	74	0	21	38	0	17	128	408	0	13	450	22
Grp Sat Flow(s),veh/h/ln	1498	0	1558	1346	0	1842	1774	1863	1583	1774	1863	1577
Q Serve(g_s), s	1.0	0.0	0.4	1.0	0.0	0.3	1.7	6.2	0.0	0.2	7.9	0.4
Cycle Q Clear(g_c), s	1.6	0.0	0.4	2.5	0.0	0.3	1.7	6.2	0.0	0.2	7.9	0.4
Prop In Lane	0.77		1.00	1.00		0.06	1.00		1.00	1.00		1.00
Lane Grp Cap(c), veh/h	397	0	239	340	0	282	456	777	660	453	654	553
V/C Ratio(X)	0.19	0.00	0.09	0.11	0.00	0.06	0.28	0.53	0.00	0.03	0.69	0.04
Avail Cap(c_a), veh/h	1129	0	1022	1017	0	1208	1019	2492	2118	1133	2492	2109
HCM Platoon Ratio	1.00	1.00	1.00	1.00	1.00	1.00	1.00	1.00	1.00	1.00	1.00	1.00
Upstream Filter(I)	1.00	0.00	1.00	1.00	0.00	1.00	1.00	1.00	0.00	1.00	1.00	1.00
Uniform Delay (d), s/veh	14.3	0.0	13.9	15.5	0.0	13.8	7.7	8.3	0.0	8.0	10.6	8.1
Incr Delay (d2), s/veh	0.2	0.0	0.2	0.1	0.0	0.1	0.3	0.6	0.0	0.0	1.3	0.0
Initial Q Delay(d3),s/veh	0.0	0.0	0.0	0.0	0.0	0.0	0.0	0.0	0.0	0.0	0.0	0.0
%ile BackOfQ(50%),veh/ln	0.7	0.0	0.2	0.4	0.0	0.2	0.8	3.3	0.0	0.1	4.2	0.2
LnGrp Delay(d),s/veh	14.5	0.0	14.0	15.6	0.0	13.9	8.0	8.8	0.0	8.0	11.9	8.2
LnGrp LOS	B		B	B		B	A	A		A	B	A
Approach Vol, veh/h		95			55			536			485	
Approach Delay, s/veh		14.4			15.1			8.6			11.6	
Approach LOS		B			B			A			B	

Timer	1	2	3	4	5	6	7	8
Assigned Phs	1	2		4	5	6		8
Phs Duration (G+Y+Rc), s	5.4	21.9		10.8	7.9	19.4		10.8
Change Period (Y+Rc), s	5.0	6.0		5.0	5.0	6.0		5.0
Max Green Setting (Gmax), s	15.0	51.0		25.0	15.0	51.0		25.0
Max Q Clear Time (g_c+I1), s	2.2	8.2		3.6	3.7	9.9		4.5
Green Ext Time (p_c), s	0.0	2.7		0.4	0.2	3.1		0.1

Intersection Summary	
HCM 2010 Ctrl Delay	10.6
HCM 2010 LOS	B

Movement	EBL	EBT	EBR	WBL	WBT	WBR	NBL	NBT	NBR	SBL	SBT	SBR
Lane Configurations												
Traffic Volume (veh/h)	37	5	74	10	2	10	70	462	11	4	581	45
Future Volume (veh/h)	37	5	74	10	2	10	70	462	11	4	581	45
Number	7	4	14	3	8	18	5	2	12	1	6	16
Initial Q (Qb), veh	0	0	0	0	0	0	0	0	0	0	0	0
Ped-Bike Adj(A_pbT)	1.00		0.99	1.00		1.00	1.00		1.00	1.00		1.00
Parking Bus, Adj	1.00	1.00	1.00	1.00	1.00	1.00	1.00	1.00	1.00	1.00	1.00	1.00
Adj Sat Flow, veh/h/ln	1863	1863	1900	1863	1863	1863	1863	1863	1863	1863	1863	1863
Adj Flow Rate, veh/h	40	5	5	11	2	1	76	502	7	4	632	23
Adj No. of Lanes	1	1	0	1	1	1	1	1	1	1	1	1
Peak Hour Factor	0.92	0.92	0.92	0.92	0.92	0.92	0.92	0.92	0.92	0.92	0.92	0.92
Percent Heavy Veh, %	2	2	2	2	2	2	2	2	2	2	2	2
Cap, veh/h	60	93	93	20	162	138	99	897	762	6	799	678
Arrive On Green	0.03	0.11	0.11	0.01	0.09	0.09	0.06	0.48	0.48	0.00	0.43	0.43
Sat Flow, veh/h	1774	852	852	1774	1863	1583	1774	1863	1583	1774	1863	1581
Grp Volume(v), veh/h	40	0	10	11	2	1	76	502	7	4	632	23
Grp Sat Flow(s),veh/h/ln	1774	0	1705	1774	1863	1583	1774	1863	1583	1774	1863	1581
Q Serve(g_s), s	1.1	0.0	0.3	0.3	0.0	0.0	2.1	9.7	0.1	0.1	14.9	0.4
Cycle Q Clear(g_c), s	1.1	0.0	0.3	0.3	0.0	0.0	2.1	9.7	0.1	0.1	14.9	0.4
Prop In Lane	1.00		0.50	1.00		1.00	1.00		1.00	1.00		1.00
Lane Grp Cap(c), veh/h	60	0	187	20	162	138	99	897	762	6	799	678
V/C Ratio(X)	0.66	0.00	0.05	0.55	0.01	0.01	0.77	0.56	0.01	0.70	0.79	0.03
Avail Cap(c_a), veh/h	700	0	706	700	772	656	875	2388	2030	875	2388	2028
HCM Platoon Ratio	1.00	1.00	1.00	1.00	1.00	1.00	1.00	1.00	1.00	1.00	1.00	1.00
Upstream Filter(I)	1.00	0.00	1.00	1.00	1.00	1.00	1.00	1.00	1.00	1.00	1.00	1.00
Uniform Delay (d), s/veh	24.2	0.0	20.2	24.9	21.2	21.1	23.6	9.3	6.8	25.2	12.5	8.4
Incr Delay (d2), s/veh	11.8	0.0	0.1	21.2	0.0	0.0	11.8	0.6	0.0	92.3	1.8	0.0
Initial Q Delay(d3),s/veh	0.0	0.0	0.0	0.0	0.0	0.0	0.0	0.0	0.0	0.0	0.0	0.0
%ile BackOfQ(50%),veh/ln	0.7	0.0	0.1	0.3	0.0	0.0	1.4	5.0	0.1	0.2	7.9	0.2
LnGrp Delay(d),s/veh	36.0	0.0	20.3	46.2	21.2	21.2	35.4	9.9	6.9	117.6	14.3	8.4
LnGrp LOS	D		C	D	C	C	D	A	A	F	B	A
Approach Vol, veh/h		50			14			585			659	
Approach Delay, s/veh		32.9			40.8			13.2			14.7	
Approach LOS		C			D			B			B	

Timer	1	2	3	4	5	6	7	8
Assigned Phs	1	2	3	4	5	6	7	8
Phs Duration (G+Y+Rc), s	5.2	29.4	5.6	10.6	7.8	26.7	6.7	9.4
Change Period (Y+Rc), s	5.0	5.0	5.0	5.0	5.0	5.0	5.0	5.0
Max Green Setting (Gmax), s	25.0	65.0	20.0	21.0	25.0	65.0	20.0	21.0
Max Q Clear Time (g_c+I1), s	2.1	11.7	2.3	2.3	4.1	16.9	3.1	2.0
Green Ext Time (p_c), s	0.0	3.5	0.0	0.0	0.2	4.9	0.1	0.0

Intersection Summary	
HCM 2010 Ctrl Delay	15.0
HCM 2010 LOS	B

Movement	EBL	EBT	EBR	WBL	WBT	WBR	NBL	NBT	NBR	SBL	SBT	SBR
Lane Configurations												
Traffic Volume (veh/h)	48	9	536	9	0	1	356	501	5	0	632	47
Future Volume (veh/h)	48	9	536	9	0	1	356	501	5	0	632	47
Number	3	8	18	7	4	14	1	6	16	5	2	12
Initial Q (Qb), veh	0	0	0	0	0	0	0	0	0	0	0	0
Ped-Bike Adj(A_pbT)	1.00		1.00	1.00		1.00	1.00		1.00	1.00		1.00
Parking Bus, Adj	1.00	1.00	1.00	1.00	1.00	1.00	1.00	1.00	1.00	1.00	1.00	1.00
Adj Sat Flow, veh/h/ln	1900	1863	1863	1900	1863	1900	1863	1863	1900	1863	1863	1863
Adj Flow Rate, veh/h	52	10	0	10	0	1	387	545	5	0	687	15
Adj No. of Lanes	0	1	1	0	1	0	1	2	0	1	2	1
Peak Hour Factor	0.92	0.92	0.92	0.92	0.92	0.92	0.92	0.92	0.92	0.92	0.92	0.92
Percent Heavy Veh, %	2	2	2	2	2	2	2	2	2	2	2	2
Cap, veh/h	215	15	102	228	5	9	467	2557	23	4	1298	578
Arrive On Green	0.08	0.06	0.00	0.08	0.00	0.06	0.26	0.71	0.71	0.00	0.37	0.37
Sat Flow, veh/h	1245	239	1583	1363	80	144	1774	3594	33	1774	3539	1577
Grp Volume(v), veh/h	62	0	0	11	0	0	387	268	282	0	687	15
Grp Sat Flow(s),veh/h/ln	1485	0	1583	1587	0	0	1774	1770	1857	1774	1770	1577
Q Serve(g_s), s	1.7	0.0	0.0	0.0	0.0	0.0	10.1	2.5	2.5	0.0	7.5	0.3
Cycle Q Clear(g_c), s	1.9	0.0	0.0	0.3	0.0	0.0	10.1	2.5	2.5	0.0	7.5	0.3
Prop In Lane	0.84		1.00	0.91		0.09	1.00		0.02	1.00		1.00
Lane Grp Cap(c), veh/h	261	0	102	274	0	0	467	1259	1321	4	1298	578
V/C Ratio(X)	0.24	0.00	0.00	0.04	0.00	0.00	0.83	0.21	0.21	0.00	0.53	0.03
Avail Cap(c_a), veh/h	764	0	646	904	0	0	2569	2490	2613	2569	4980	2219
HCM Platoon Ratio	1.00	1.00	1.00	1.00	1.00	1.00	1.00	1.00	1.00	1.00	1.00	1.00
Upstream Filter(I)	1.00	0.00	0.00	1.00	0.00	0.00	1.00	1.00	1.00	0.00	1.00	1.00
Uniform Delay (d), s/veh	21.9	0.0	0.0	21.2	0.0	0.0	17.0	2.4	2.4	0.0	12.2	9.9
Incr Delay (d2), s/veh	0.5	0.0	0.0	0.1	0.0	0.0	1.5	0.2	0.2	0.0	0.7	0.0
Initial Q Delay(d3),s/veh	0.0	0.0	0.0	0.0	0.0	0.0	0.0	0.0	0.0	0.0	0.0	0.0
%ile BackOfQ(50%),veh/ln	0.8	0.0	0.0	0.1	0.0	0.0	5.1	1.3	1.3	0.0	3.8	0.1
LnGrp Delay(d),s/veh	22.4	0.0	0.0	21.2	0.0	0.0	18.5	2.6	2.6	0.0	12.9	10.0
LnGrp LOS	C			C			B	A	A		B	A
Approach Vol, veh/h		62			11			937			702	
Approach Delay, s/veh		22.4			21.2			9.2			12.9	
Approach LOS		C			C			A			B	

Timer	1	2	3	4	5	6	7	8
Assigned Phs	1	2		4	5	6		8
Phs Duration (G+Y+Rc), s	16.9	24.0		8.2	0.0	40.9		8.2
Change Period (Y+Rc), s	4.0	6.0		5.0	4.0	6.0		5.0
Max Green Setting (Gmax), s	71.0	69.0		25.0	71.0	69.0		20.0
Max Q Clear Time (g_c+I1), s	12.1	9.5		2.3	0.0	4.5		3.9
Green Ext Time (p_c), s	0.9	8.5		0.0	0.0	5.6		0.1

Intersection Summary	
HCM 2010 Ctrl Delay	11.2
HCM 2010 LOS	B

Movement	EBL	EBT	EBR	WBL	WBT	WBR	NBL	NBT	NBR	SBL	SBT	SBR
Lane Configurations												
Traffic Volume (veh/h)	26	2	66	14	2	12	43	826	15	9	1141	39
Future Volume (veh/h)	26	2	66	14	2	12	43	826	15	9	1141	39
Number	3	8	18	7	4	14	1	6	16	5	2	12
Initial Q (Qb), veh	0	0	0	0	0	0	0	0	0	0	0	0
Ped-Bike Adj(A_pbT)	0.98		0.98	0.98		0.98	1.00		1.00	1.00		1.00
Parking Bus, Adj	1.00	1.00	1.00	1.00	1.00	1.00	1.00	1.00	1.00	1.00	1.00	1.00
Adj Sat Flow, veh/h/ln	1900	1863	1863	1900	1863	1900	1863	1863	1900	1863	1863	1863
Adj Flow Rate, veh/h	28	2	1	15	2	1	47	898	15	10	1240	26
Adj No. of Lanes	0	1	1	0	1	0	1	2	0	1	2	1
Peak Hour Factor	0.92	0.92	0.92	0.92	0.92	0.92	0.92	0.92	0.92	0.92	0.92	0.92
Percent Heavy Veh, %	2	2	2	2	2	2	2	2	2	2	2	2
Cap, veh/h	240	12	131	207	22	6	57	2315	39	14	2213	988
Arrive On Green	0.10	0.08	0.08	0.10	0.08	0.08	0.03	0.65	0.65	0.01	0.63	0.63
Sat Flow, veh/h	1325	142	1547	1013	259	75	1774	3562	60	1774	3539	1580
Grp Volume(v), veh/h	30	0	1	18	0	0	47	446	467	10	1240	26
Grp Sat Flow(s),veh/h/ln	1468	0	1547	1347	0	0	1774	1770	1852	1774	1770	1580
Q Serve(g_s), s	0.0	0.0	0.0	0.1	0.0	0.0	1.4	6.4	6.4	0.3	11.0	0.3
Cycle Q Clear(g_c), s	0.8	0.0	0.0	1.0	0.0	0.0	1.4	6.4	6.4	0.3	11.0	0.3
Prop In Lane	0.93		1.00	0.83		0.06	1.00		0.03	1.00		1.00
Lane Grp Cap(c), veh/h	279	0	131	260	0	0	57	1150	1204	14	2213	988
V/C Ratio(X)	0.11	0.00	0.01	0.07	0.00	0.00	0.82	0.39	0.39	0.73	0.56	0.03
Avail Cap(c_a), veh/h	756	0	656	746	0	0	686	2804	2934	359	4955	2211
HCM Platoon Ratio	1.00	1.00	1.00	1.00	1.00	1.00	1.00	1.00	1.00	1.00	1.00	1.00
Upstream Filter(I)	1.00	0.00	1.00	1.00	0.00	0.00	1.00	1.00	1.00	1.00	1.00	1.00
Uniform Delay (d), s/veh	22.7	0.0	22.8	22.7	0.0	0.0	26.1	4.5	4.5	26.9	5.9	3.9
Incr Delay (d2), s/veh	0.1	0.0	0.0	0.0	0.0	0.0	10.2	0.5	0.4	23.6	0.5	0.0
Initial Q Delay(d3),s/veh	0.0	0.0	0.0	0.0	0.0	0.0	0.0	0.0	0.0	0.0	0.0	0.0
%ile BackOfQ(50%),veh/ln	0.4	0.0	0.0	0.2	0.0	0.0	0.9	3.2	3.4	0.2	5.3	0.2
LnGrp Delay(d),s/veh	22.8	0.0	22.8	22.7	0.0	0.0	36.3	4.9	4.9	50.5	6.3	3.9
LnGrp LOS	C		C	C			D	A	A	D	A	A
Approach Vol, veh/h		31			18			960			1276	
Approach Delay, s/veh		22.8			22.7			6.4			6.6	
Approach LOS		C			C			A			A	

Timer	1	2	3	4	5	6	7	8
Assigned Phs	1	2		4	5	6		8
Phs Duration (G+Y+Rc), s	5.8	38.9		9.6	4.4	40.3		9.6
Change Period (Y+Rc), s	4.0	5.0		5.0	4.0	5.0		5.0
Max Green Setting (Gmax), s	21.0	76.0		23.0	11.0	86.0		23.0
Max Q Clear Time (g_c+I1), s	3.4	13.0		3.0	2.3	8.4		2.8
Green Ext Time (p_c), s	0.0	21.0		0.0	0.0	11.4		0.0

Intersection Summary	
HCM 2010 Ctrl Delay	6.9
HCM 2010 LOS	A

Movement	EBL	EBT	EBR	WBL	WBT	WBR	NBL	NBT	NBR	SBL	SBT	SBR
Lane Configurations												
Traffic Volume (veh/h)	48	2	167	38	3	27	101	782	45	27	1114	63
Future Volume (veh/h)	48	2	167	38	3	27	101	782	45	27	1114	63
Number	3	8	18	7	4	14	1	6	16	5	2	12
Initial Q (Qb), veh	0	0	0	0	0	0	0	0	0	0	0	0
Ped-Bike Adj(A_pbT)	1.00		1.00	1.00		1.00	1.00		1.00	1.00		1.00
Parking Bus, Adj	1.00	1.00	1.00	1.00	1.00	1.00	1.00	1.00	1.00	1.00	1.00	1.00
Adj Sat Flow, veh/h/ln	1900	1863	1863	1863	1863	1900	1863	1863	1863	1863	1863	1863
Adj Flow Rate, veh/h	52	2	17	41	3	3	110	850	28	29	1211	34
Adj No. of Lanes	0	1	1	1	1	0	1	2	1	1	2	1
Peak Hour Factor	0.92	0.92	0.92	0.92	0.92	0.92	0.92	0.92	0.92	0.92	0.92	0.92
Percent Heavy Veh, %	2	2	2	2	2	2	2	2	2	2	2	2
Cap, veh/h	325	10	260	287	141	141	144	2064	923	55	1887	844
Arrive On Green	0.18	0.16	0.16	0.16	0.16	0.16	0.08	0.58	0.58	0.03	0.53	0.53
Sat Flow, veh/h	1338	63	1578	1383	854	854	1774	3539	1583	1774	3539	1583
Grp Volume(v), veh/h	54	0	17	41	0	6	110	850	28	29	1211	34
Grp Sat Flow(s),veh/h/ln	1401	0	1578	1383	0	1709	1774	1770	1583	1774	1770	1583
Q Serve(g_s), s	2.1	0.0	0.6	1.8	0.0	0.2	4.1	8.9	0.5	1.1	16.5	0.7
Cycle Q Clear(g_c), s	2.3	0.0	0.6	4.1	0.0	0.2	4.1	8.9	0.5	1.1	16.5	0.7
Prop In Lane	0.96		1.00	1.00		0.50	1.00		1.00	1.00		1.00
Lane Grp Cap(c), veh/h	356	0	260	287	0	282	144	2064	923	55	1887	844
V/C Ratio(X)	0.15	0.00	0.07	0.14	0.00	0.02	0.77	0.41	0.03	0.53	0.64	0.04
Avail Cap(c_a), veh/h	622	0	557	548	0	604	548	3595	1608	313	3126	1399
HCM Platoon Ratio	1.00	1.00	1.00	1.00	1.00	1.00	1.00	1.00	1.00	1.00	1.00	1.00
Upstream Filter(I)	1.00	0.00	1.00	1.00	0.00	1.00	1.00	1.00	1.00	1.00	1.00	1.00
Uniform Delay (d), s/veh	24.3	0.0	23.9	26.4	0.0	23.8	30.6	7.8	6.0	32.4	11.2	7.6
Incr Delay (d2), s/veh	0.2	0.0	0.1	0.2	0.0	0.0	3.2	0.3	0.0	2.9	0.8	0.0
Initial Q Delay(d3),s/veh	0.0	0.0	0.0	0.0	0.0	0.0	0.0	0.0	0.0	0.0	0.0	0.0
%ile BackOfQ(50%),veh/ln	0.9	0.0	0.3	0.7	0.0	0.1	2.1	4.4	0.2	0.6	8.1	0.3
LnGrp Delay(d),s/veh	24.5	0.0	24.0	26.7	0.0	23.8	33.8	8.0	6.0	35.3	12.0	7.6
LnGrp LOS	C		C	C		C	C	A	A	D	B	A
Approach Vol, veh/h		71			47			988			1274	
Approach Delay, s/veh		24.4			26.3			10.9			12.4	
Approach LOS		C			C			B			B	

Timer	1	2	3	4	5	6	7	8
Assigned Phs	1	2		4	5	6		8
Phs Duration (G+Y+Rc), s	9.5	42.2		16.2	6.1	45.6		16.2
Change Period (Y+Rc), s	4.0	6.0		5.0	4.0	6.0		5.0
Max Green Setting (Gmax), s	21.0	60.0		24.0	12.0	69.0		24.0
Max Q Clear Time (g_c+I1), s	6.1	18.5		6.1	3.1	10.9		4.3
Green Ext Time (p_c), s	0.2	17.7		0.1	0.0	11.5		0.2

Intersection Summary	
HCM 2010 Ctrl Delay	12.4
HCM 2010 LOS	B

Movement	EBL	EBT	EBR	WBL	WBT	WBR	NBL	NBT	NBR	SBL	SBT	SBR
Lane Configurations												
Traffic Volume (veh/h)	204	1	432	12	3	15	280	908	12	25	1141	136
Future Volume (veh/h)	204	1	432	12	3	15	280	908	12	25	1141	136
Number	3	8	18	7	4	14	1	6	16	5	2	12
Initial Q (Qb), veh	0	0	0	0	0	0	0	0	0	0	0	0
Ped-Bike Adj(A_pbT)	1.00		1.00	1.00		1.00	1.00		1.00	1.00		1.00
Parking Bus, Adj	1.00	1.00	1.00	1.00	1.00	1.00	1.00	1.00	1.00	1.00	1.00	1.00
Adj Sat Flow, veh/h/ln	1900	1863	1863	1900	1863	1900	1863	1863	1900	1863	1863	1863
Adj Flow Rate, veh/h	222	1	255	13	3	4	304	987	13	27	1240	107
Adj No. of Lanes	0	1	2	0	1	0	2	2	0	1	2	1
Peak Hour Factor	0.92	0.92	0.92	0.92	0.92	0.92	0.92	0.92	0.92	0.92	0.92	0.92
Percent Heavy Veh, %	2	2	2	2	2	2	2	2	2	2	2	2
Cap, veh/h	321	1	846	58	13	18	454	1926	25	124	1685	753
Arrive On Green	0.18	0.18	0.17	0.05	0.05	0.02	0.13	0.54	0.52	0.07	0.48	0.48
Sat Flow, veh/h	1766	8	2787	1134	262	349	3442	3577	47	1774	3539	1582
Grp Volume(v), veh/h	223	0	255	20	0	0	304	488	512	27	1240	107
Grp Sat Flow(s),veh/h/ln	1774	0	1393	1744	0	0	1721	1770	1854	1774	1770	1582
Q Serve(g_s), s	11.8	0.0	7.0	1.1	0.0	0.0	8.5	17.7	17.7	1.4	28.4	3.8
Cycle Q Clear(g_c), s	11.8	0.0	7.0	1.1	0.0	0.0	8.5	17.7	17.7	1.4	28.4	3.8
Prop In Lane	1.00		1.00	0.65		0.20	1.00		0.03	1.00		1.00
Lane Grp Cap(c), veh/h	322	0	846	89	0	0	454	953	999	124	1685	753
V/C Ratio(X)	0.69	0.00	0.30	0.22	0.00	0.00	0.67	0.51	0.51	0.22	0.74	0.14
Avail Cap(c_a), veh/h	989	0	1893	608	0	0	1473	3681	3857	371	6587	2945
HCM Platoon Ratio	1.00	1.00	1.00	1.00	1.00	1.00	1.00	1.00	1.00	1.00	1.00	1.00
Upstream Filter(I)	1.00	0.00	1.00	1.00	0.00	0.00	1.00	1.00	1.00	1.00	1.00	1.00
Uniform Delay (d), s/veh	38.5	0.0	26.8	46.0	0.0	0.0	41.5	14.8	14.8	44.2	21.2	14.8
Incr Delay (d2), s/veh	1.0	0.0	0.1	0.5	0.0	0.0	0.6	0.6	0.6	0.3	0.9	0.1
Initial Q Delay(d3),s/veh	0.0	0.0	0.0	0.0	0.0	0.0	0.0	0.0	0.0	0.0	0.0	0.0
%ile BackOfQ(50%),veh/ln	5.9	0.0	2.7	0.5	0.0	0.0	4.1	8.7	9.1	0.7	14.0	1.7
LnGrp Delay(d),s/veh	39.5	0.0	26.9	46.5	0.0	0.0	42.2	15.4	15.4	44.5	22.1	14.9
LnGrp LOS	D		C	D			D	B	B	D	C	B
Approach Vol, veh/h		478			20			1304			1374	
Approach Delay, s/veh		32.8			46.5			21.6			22.0	
Approach LOS		C			D			C			C	

Timer	1	2	3	4	5	6	7	8
Assigned Phs	1	2		4	5	6		8
Phs Duration (G+Y+Rc), s	17.3	51.8		9.1	11.0	58.1		22.2
Change Period (Y+Rc), s	6.0	6.0		7.0	6.0	6.0		7.0
Max Green Setting (Gmax), s	41.0	185.0		32.0	19.0	207.0		53.0
Max Q Clear Time (g_c+I1), s	10.5	30.4		3.1	3.4	19.7		13.8
Green Ext Time (p_c), s	0.8	15.5		0.0	0.0	8.3		1.4

Intersection Summary	
HCM 2010 Ctrl Delay	23.6
HCM 2010 LOS	C

Movement	EBL	EBT	EBR	WBL	WBT	WBR	NBL	NBT	NBR	SBL	SBT	SBR
Lane Configurations												
Traffic Volume (veh/h)	2	0	3	130	1	51	2	1083	83	78	1558	6
Future Volume (veh/h)	2	0	3	130	1	51	2	1083	83	78	1558	6
Number	3	8	18	7	4	14	1	6	16	5	2	12
Initial Q (Qb), veh	0	0	0	0	0	0	0	0	0	0	0	0
Ped-Bike Adj(A_pbT)	1.00		1.00	1.00		1.00	1.00		1.00	1.00		1.00
Parking Bus, Adj	1.00	1.00	1.00	1.00	1.00	1.00	1.00	1.00	1.00	1.00	1.00	1.00
Adj Sat Flow, veh/h/ln	1900	1863	1900	1863	1863	1900	1863	1863	1900	1863	1863	1900
Adj Flow Rate, veh/h	2	0	1	141	1	4	2	1177	86	85	1693	7
Adj No. of Lanes	0	1	0	1	1	0	1	2	0	1	2	0
Peak Hour Factor	0.92	0.92	0.92	0.92	0.92	0.92	0.92	0.92	0.92	0.92	0.92	0.92
Percent Heavy Veh, %	2	2	2	2	2	2	2	2	2	2	2	2
Cap, veh/h	157	9	60	228	40	159	5	2418	177	111	2831	12
Arrive On Green	0.12	0.00	0.11	0.12	0.12	0.11	0.00	0.96	0.95	0.06	0.78	0.78
Sat Flow, veh/h	912	74	493	1410	326	1306	1774	3345	244	1774	3615	15
Grp Volume(v), veh/h	3	0	0	141	0	5	2	622	641	85	828	872
Grp Sat Flow(s),veh/h/ln	1479	0	0	1410	0	1632	1774	1770	1820	1774	1770	1860
Q Serve(g_s), s	0.0	0.0	0.0	12.4	0.0	0.4	0.1	3.3	3.4	6.1	24.8	24.9
Cycle Q Clear(g_c), s	0.2	0.0	0.0	12.6	0.0	0.4	0.1	3.3	3.4	6.1	24.8	24.9
Prop In Lane	0.67		0.33	1.00		0.80	1.00		0.13	1.00		0.01
Lane Grp Cap(c), veh/h	226	0	0	228	0	199	5	1279	1316	111	1386	1457
V/C Ratio(X)	0.01	0.00	0.00	0.62	0.00	0.03	0.42	0.49	0.49	0.76	0.60	0.60
Avail Cap(c_a), veh/h	318	0	0	316	0	301	150	1279	1316	150	1386	1457
HCM Platoon Ratio	1.00	1.00	1.00	1.00	1.00	1.00	1.33	1.33	1.33	1.00	1.00	1.00
Upstream Filter(I)	1.00	0.00	0.00	1.00	0.00	1.00	0.91	0.91	0.91	1.00	1.00	1.00
Uniform Delay (d), s/veh	50.4	0.0	0.0	55.6	0.0	50.6	64.7	0.8	0.8	60.0	5.8	5.8
Incr Delay (d2), s/veh	0.0	0.0	0.0	2.7	0.0	0.1	18.7	1.2	1.2	9.7	1.9	1.8
Initial Q Delay(d3),s/veh	0.0	0.0	0.0	0.0	0.0	0.0	0.0	0.0	0.0	0.0	0.0	0.0
%ile BackOfQ(50%),veh/ln	0.1	0.0	0.0	5.1	0.0	0.2	0.1	1.7	1.8	3.3	12.7	13.3
LnGrp Delay(d),s/veh	50.4	0.0	0.0	58.4	0.0	50.7	83.4	2.0	2.0	69.6	7.7	7.6
LnGrp LOS	D			E		D	F	A	A	E	A	A
Approach Vol, veh/h		3			146			1265			1785	
Approach Delay, s/veh		50.4			58.1			2.1			10.6	
Approach LOS		D			E			A			B	

Timer	1	2	3	4	5	6	7	8
Assigned Phs	1	2		4	5	6		8
Phs Duration (G+Y+Rc), s	4.3	105.8		19.9	12.2	98.0		19.9
Change Period (Y+Rc), s	4.0	5.0		5.0	4.0	5.0		5.0
Max Green Setting (Gmax), s	11.0	82.0		23.0	11.0	82.0		23.0
Max Q Clear Time (g_c+I1), s	2.1	26.9		14.6	8.1	5.4		2.2
Green Ext Time (p_c), s	0.0	31.9		0.3	0.0	20.4		0.0

Intersection Summary	
HCM 2010 Ctrl Delay	9.4
HCM 2010 LOS	A

Movement	EBL	EBT	EBR	WBL	WBT	WBR	NBL	NBT	NBR	SBL	SBT	SBR
Lane Configurations												
Traffic Volume (veh/h)	114	3	14	62	3	11	11	1045	15	7	1369	235
Future Volume (veh/h)	114	3	14	62	3	11	11	1045	15	7	1369	235
Number	3	8	18	7	4	14	1	6	16	5	2	12
Initial Q (Qb), veh	0	0	0	0	0	0	0	0	0	0	0	0
Ped-Bike Adj(A_pbT)	1.00		1.00	1.00		1.00	1.00		1.00	1.00		1.00
Parking Bus, Adj	1.00	1.00	1.00	1.00	1.00	1.00	1.00	1.00	1.00	1.00	1.00	1.00
Adj Sat Flow, veh/h/ln	1900	1863	1900	1900	1863	1900	1863	1863	1900	1863	1863	1863
Adj Flow Rate, veh/h	124	3	12	67	3	7	12	1136	15	8	1488	182
Adj No. of Lanes	0	1	0	0	1	0	1	2	0	1	2	1
Peak Hour Factor	0.92	0.92	0.92	0.92	0.92	0.92	0.92	0.92	0.92	0.92	0.92	0.92
Percent Heavy Veh, %	2	2	2	2	2	2	2	2	2	2	2	2
Cap, veh/h	206	4	15	207	11	17	14	2824	37	10	2786	1246
Arrive On Green	0.11	0.11	0.10	0.11	0.11	0.10	0.01	0.53	0.52	0.01	0.79	0.79
Sat Flow, veh/h	1366	33	132	1385	96	148	1774	3577	47	1774	3539	1582
Grp Volume(v), veh/h	139	0	0	77	0	0	12	562	589	8	1488	182
Grp Sat Flow(s),veh/h/ln	1531	0	0	1629	0	0	1774	1770	1854	1774	1770	1582
Q Serve(g_s), s	5.8	0.0	0.0	0.0	0.0	0.0	0.9	24.7	24.7	0.6	20.1	3.6
Cycle Q Clear(g_c), s	11.3	0.0	0.0	5.5	0.0	0.0	0.9	24.7	24.7	0.6	20.1	3.6
Prop In Lane	0.89		0.09	0.87		0.09	1.00		0.03	1.00		1.00
Lane Grp Cap(c), veh/h	224	0	0	235	0	0	14	1397	1464	10	2786	1246
V/C Ratio(X)	0.62	0.00	0.00	0.33	0.00	0.00	0.83	0.40	0.40	0.78	0.53	0.15
Avail Cap(c_a), veh/h	349	0	0	360	0	0	109	1397	1464	109	2786	1246
HCM Platoon Ratio	1.00	1.00	1.00	1.00	1.00	1.00	0.67	0.67	0.67	1.00	1.00	1.00
Upstream Filter(I)	1.00	0.00	0.00	1.00	0.00	0.00	0.86	0.86	0.86	0.74	0.74	0.74
Uniform Delay (d), s/veh	56.0	0.0	0.0	53.7	0.0	0.0	64.6	12.3	12.3	64.5	5.1	3.3
Incr Delay (d2), s/veh	2.8	0.0	0.0	0.8	0.0	0.0	30.7	0.7	0.7	28.6	0.5	0.2
Initial Q Delay(d3),s/veh	0.0	0.0	0.0	0.0	0.0	0.0	0.0	0.0	0.0	0.0	0.0	0.0
%ile BackOfQ(50%),veh/ln	5.0	0.0	0.0	2.6	0.0	0.0	0.6	12.3	12.9	0.4	9.9	1.6
LnGrp Delay(d),s/veh	58.8	0.0	0.0	54.5	0.0	0.0	95.2	13.0	13.0	93.2	5.6	3.5
LnGrp LOS	E			D			F	B	B	F	A	A
Approach Vol, veh/h		139			77			1163			1678	
Approach Delay, s/veh		58.8			54.5			13.8			5.8	
Approach LOS		E			D			B			A	

Timer	1	2	3	4	5	6	7	8
Assigned Phs	1	2		4	5	6		8
Phs Duration (G+Y+Rc), s	5.1	106.3		18.6	4.8	106.6		18.6
Change Period (Y+Rc), s	4.0	5.0		5.0	4.0	5.0		5.0
Max Green Setting (Gmax), s	8.0	83.0		25.0	8.0	83.0		25.0
Max Q Clear Time (g_c+I1), s	2.9	22.1		7.5	2.6	26.7		13.3
Green Ext Time (p_c), s	0.0	40.8		0.2	0.0	22.8		0.3

Intersection Summary	
HCM 2010 Ctrl Delay	12.5
HCM 2010 LOS	B

Movement	EBL	EBT	EBR	WBL	WBT	WBR	NBL	NBT	NBR	SBL	SBT	SBR
Lane Configurations												
Traffic Volume (veh/h)	139	17	48	83	19	15	58	1122	59	14	1389	118
Future Volume (veh/h)	139	17	48	83	19	15	58	1122	59	14	1389	118
Number	3	8	18	7	4	14	1	6	16	5	2	12
Initial Q (Qb), veh	0	0	0	0	0	0	0	0	0	0	0	0
Ped-Bike Adj(A_pbT)	0.99		0.99	1.00		0.99	1.00		0.99	1.00		1.00
Parking Bus, Adj	1.00	1.00	1.00	1.00	1.00	1.00	1.00	1.00	1.00	1.00	1.00	1.00
Adj Sat Flow, veh/h/ln	1900	1863	1863	1863	1863	1900	1863	1863	1900	1863	1863	1900
Adj Flow Rate, veh/h	151	18	6	90	21	2	63	1220	62	15	1510	124
Adj No. of Lanes	0	1	1	1	1	0	1	2	0	1	2	0
Peak Hour Factor	0.92	0.92	0.92	0.92	0.92	0.92	0.92	0.92	0.92	0.92	0.92	0.92
Percent Heavy Veh, %	2	2	2	2	2	2	2	2	2	2	2	2
Cap, veh/h	232	21	241	302	256	24	80	2552	130	18	2352	192
Arrive On Green	0.15	0.15	0.15	0.15	0.15	0.15	0.09	1.00	1.00	0.01	0.94	0.93
Sat Flow, veh/h	1175	140	1574	1384	1674	159	1774	3427	174	1774	3314	270
Grp Volume(v), veh/h	169	0	6	90	0	23	63	630	652	15	802	832
Grp Sat Flow(s),veh/h/ln	1315	0	1574	1384	0	1833	1774	1770	1831	1774	1770	1815
Q Serve(g_s), s	15.1	0.0	0.4	0.0	0.0	1.4	4.5	0.0	0.0	1.1	8.3	8.8
Cycle Q Clear(g_c), s	16.5	0.0	0.4	6.3	0.0	1.4	4.5	0.0	0.0	1.1	8.3	8.8
Prop In Lane	0.89		1.00	1.00		0.09	1.00		0.10	1.00		0.15
Lane Grp Cap(c), veh/h	254	0	241	302	0	280	80	1318	1364	18	1256	1288
V/C Ratio(X)	0.67	0.00	0.02	0.30	0.00	0.08	0.79	0.48	0.48	0.85	0.64	0.65
Avail Cap(c_a), veh/h	331	0	327	378	0	381	109	1318	1364	109	1256	1288
HCM Platoon Ratio	1.00	1.00	1.00	1.00	1.00	1.00	2.00	2.00	2.00	1.33	1.33	1.33
Upstream Filter(I)	1.00	0.00	1.00	1.00	0.00	1.00	0.75	0.75	0.75	0.81	0.81	0.81
Uniform Delay (d), s/veh	54.3	0.0	46.8	49.3	0.0	47.3	58.5	0.0	0.0	64.0	1.3	1.3
Incr Delay (d2), s/veh	3.2	0.0	0.0	0.5	0.0	0.1	12.4	0.9	0.9	26.6	2.0	2.0
Initial Q Delay(d3),s/veh	0.0	0.0	0.0	0.0	0.0	0.0	0.0	0.0	0.0	0.0	0.0	0.0
%ile BackOfQ(50%),veh/ln	6.1	0.0	0.2	2.9	0.0	0.7	2.5	0.3	0.3	0.7	4.2	4.7
LnGrp Delay(d),s/veh	57.6	0.0	46.9	49.9	0.0	47.4	70.9	0.9	0.9	90.6	3.3	3.4
LnGrp LOS	E		D	D		D	E	A	A	F	A	A
Approach Vol, veh/h		175			113			1345			1649	
Approach Delay, s/veh		57.2			49.4			4.2			4.1	
Approach LOS		E			D			A			A	

Timer	1	2	3	4	5	6	7	8
Assigned Phs	1	2		4	5	6		8
Phs Duration (G+Y+Rc), s	9.9	96.3		23.9	5.3	100.8		23.9
Change Period (Y+Rc), s	4.0	5.0		5.0	4.0	5.0		5.0
Max Green Setting (Gmax), s	8.0	82.0		26.0	8.0	82.0		26.0
Max Q Clear Time (g_c+I1), s	6.5	10.8		8.3	3.1	2.0		18.5
Green Ext Time (p_c), s	0.0	33.8		0.3	0.0	21.1		0.4

Intersection Summary	
HCM 2010 Ctrl Delay	8.6
HCM 2010 LOS	A

Notes

Movement	EBL	EBT	EBR	WBL	WBT	WBR	NBL	NBT	NBR	SBL	SBT	SBR
Lane Configurations												
Traffic Volume (veh/h)	51	112	124	191	93	381	108	779	256	346	952	89
Future Volume (veh/h)	51	112	124	191	93	381	108	779	256	346	952	89
Number	7	4	14	3	8	18	1	6	16	5	2	12
Initial Q (Qb), veh	0	0	0	0	0	0	0	0	0	0	0	0
Ped-Bike Adj(A_pbT)	0.96		0.95	0.98		0.97	1.00		0.99	1.00		1.00
Parking Bus, Adj	1.00	1.00	1.00	1.00	1.00	1.00	1.00	1.00	1.00	1.00	1.00	1.00
Adj Sat Flow, veh/h/ln	1900	1863	1863	1863	1863	1863	1863	1863	1863	1863	1863	1900
Adj Flow Rate, veh/h	55	122	20	208	101	96	117	847	182	376	1035	93
Adj No. of Lanes	0	1	1	1	1	1	1	2	1	1	2	0
Peak Hour Factor	0.92	0.92	0.92	0.92	0.92	0.92	0.92	0.92	0.92	0.92	0.92	0.92
Percent Heavy Veh, %	2	2	2	2	2	2	2	2	2	2	2	2
Cap, veh/h	103	187	240	315	555	459	143	1343	592	408	1738	156
Arrive On Green	0.16	0.16	0.16	0.11	0.30	0.30	0.08	0.38	0.38	0.08	0.17	0.17
Sat Flow, veh/h	421	1173	1503	1774	1863	1540	1774	3539	1560	1774	3285	295
Grp Volume(v), veh/h	177	0	20	208	101	96	117	847	182	376	557	571
Grp Sat Flow(s),veh/h/ln	1593	0	1503	1774	1863	1540	1774	1770	1560	1774	1770	1810
Q Serve(g_s), s	10.8	0.0	1.5	12.4	5.2	6.1	8.4	25.4	10.7	27.4	37.7	37.8
Cycle Q Clear(g_c), s	13.4	0.0	1.5	12.4	5.2	6.1	8.4	25.4	10.7	27.4	37.7	37.8
Prop In Lane	0.31		1.00	1.00		1.00	1.00		1.00	1.00		0.16
Lane Grp Cap(c), veh/h	291	0	240	315	555	459	143	1343	592	408	936	958
V/C Ratio(X)	0.61	0.00	0.08	0.66	0.18	0.21	0.82	0.63	0.31	0.92	0.60	0.60
Avail Cap(c_a), veh/h	353	0	301	315	630	521	328	1343	592	491	936	958
HCM Platoon Ratio	1.00	1.00	1.00	1.00	1.00	1.00	1.00	1.00	1.00	0.33	0.33	0.33
Upstream Filter(I)	1.00	0.00	1.00	1.00	1.00	1.00	0.79	0.79	0.79	0.71	0.71	0.71
Uniform Delay (d), s/veh	51.3	0.0	46.5	39.0	33.8	34.1	58.9	32.9	28.3	58.9	40.8	40.9
Incr Delay (d2), s/veh	2.1	0.0	0.1	5.1	0.2	0.2	3.5	1.8	1.1	14.7	2.0	1.9
Initial Q Delay(d3),s/veh	0.0	0.0	0.0	0.0	0.0	0.0	0.0	0.0	0.0	0.0	0.0	0.0
%ile BackOfQ(50%),veh/ln	6.2	0.0	0.6	6.5	2.7	2.6	4.3	12.7	4.8	15.1	19.0	19.5
LnGrp Delay(d),s/veh	53.4	0.0	46.7	44.0	34.0	34.4	62.4	34.7	29.4	73.6	42.8	42.8
LnGrp LOS	D		D	D	C	C	E	C	C	E	D	D
Approach Vol, veh/h		197			405			1146			1504	
Approach Delay, s/veh		52.7			39.2			36.7			50.5	
Approach LOS		D			D			D			D	

Timer	1	2	3	4	5	6	7	8
Assigned Phs	1	2	3	4	5	6		8
Phs Duration (G+Y+Rc), s	14.4	72.8	18.0	24.8	33.9	53.3		42.8
Change Period (Y+Rc), s	4.0	5.0	5.0	5.0	4.0	5.0		5.0
Max Green Setting (Gmax), s	24.0	49.0	13.0	25.0	36.0	37.0		43.0
Max Q Clear Time (g_c+I1), s	10.4	39.8	14.4	15.4	29.4	27.4		8.1
Green Ext Time (p_c), s	0.2	6.0	0.0	0.5	0.5	5.8		0.8

Intersection Summary	
HCM 2010 Ctrl Delay	44.4
HCM 2010 LOS	D

Notes

APPENDIX C

LEVEL OF SERVICE CALCULATIONS

- Base Year 2022 AM Peak

HCM 2010 Signalized Intersection Summary
1: Honoapiilani Highway & Napilihau Street

08/09/2017

Movement	EBL	EBT	EBR	WBL	WBT	WBR	NBL	NBT	NBR	SBL	SBT	SBR
Lane Configurations												
Traffic Volume (veh/h)	50	45	295	90	50	20	220	230	100	10	135	30
Future Volume (veh/h)	50	45	295	90	50	20	220	230	100	10	135	30
Number	7	4	14	3	8	18	5	2	12	1	6	16
Initial Q (Qb), veh	0	0	0	0	0	0	0	0	0	0	0	0
Ped-Bike Adj(A_pbT)	0.99		0.99	0.99		0.99	1.00		1.00	1.00		1.00
Parking Bus, Adj	1.00	1.00	1.00	1.00	1.00	1.00	1.00	1.00	1.00	1.00	1.00	1.00
Adj Sat Flow, veh/h/ln	1900	1863	1863	1863	1863	1900	1863	1863	1863	1863	1863	1863
Adj Flow Rate, veh/h	54	49	42	98	54	11	239	250	51	11	147	8
Adj No. of Lanes	0	1	1	1	1	0	1	1	1	1	1	1
Peak Hour Factor	0.92	0.92	0.92	0.92	0.92	0.92	0.92	0.92	0.92	0.92	0.92	0.92
Percent Heavy Veh, %	2	2	2	2	2	2	2	2	2	2	2	2
Cap, veh/h	239	165	258	328	247	50	320	789	671	15	469	399
Arrive On Green	0.16	0.16	0.16	0.16	0.16	0.16	0.18	0.42	0.42	0.01	0.25	0.25
Sat Flow, veh/h	612	999	1569	1291	1500	306	1774	1863	1583	1774	1863	1583
Grp Volume(v), veh/h	103	0	42	98	0	65	239	250	51	11	147	8
Grp Sat Flow(s),veh/h/ln	1612	0	1569	1291	0	1806	1774	1863	1583	1774	1863	1583
Q Serve(g_s), s	0.5	0.0	0.9	2.9	0.0	1.2	5.1	3.5	0.8	0.2	2.5	0.2
Cycle Q Clear(g_c), s	2.0	0.0	0.9	4.9	0.0	1.2	5.1	3.5	0.8	0.2	2.5	0.2
Prop In Lane	0.52		1.00	1.00		0.17	1.00		1.00	1.00		1.00
Lane Grp Cap(c), veh/h	404	0	258	328	0	297	320	789	671	15	469	399
V/C Ratio(X)	0.26	0.00	0.16	0.30	0.00	0.22	0.75	0.32	0.08	0.72	0.31	0.02
Avail Cap(c_a), veh/h	1078	0	948	896	0	1091	1341	3706	3151	670	3003	2552
HCM Platoon Ratio	1.00	1.00	1.00	1.00	1.00	1.00	1.00	1.00	1.00	1.00	1.00	1.00
Upstream Filter(I)	1.00	0.00	1.00	1.00	0.00	1.00	1.00	1.00	1.00	1.00	1.00	1.00
Uniform Delay (d), s/veh	14.7	0.0	14.2	16.9	0.0	14.4	15.4	7.6	6.8	19.6	12.1	11.2
Incr Delay (d2), s/veh	0.3	0.0	0.3	0.5	0.0	0.4	3.5	0.5	0.1	47.2	0.8	0.0
Initial Q Delay(d3),s/veh	0.0	0.0	0.0	0.0	0.0	0.0	0.0	0.0	0.0	0.0	0.0	0.0
%ile BackOfQ(50%),veh/ln	1.0	0.0	0.4	1.1	0.0	0.6	2.8	1.9	0.3	0.3	1.4	0.1
LnGrp Delay(d),s/veh	15.0	0.0	14.5	17.4	0.0	14.7	18.9	8.1	6.9	66.8	12.9	11.2
LnGrp LOS	B		B	B		B	B	A	A	E	B	B
Approach Vol, veh/h		145			163			540			166	
Approach Delay, s/veh		14.9			16.3			12.8			16.4	
Approach LOS		B			B			B			B	

Timer	1	2	3	4	5	6	7	8
Assigned Phs	1	2		4	5	6		8
Phs Duration (G+Y+Rc), s	5.3	22.8		11.5	12.2	16.0		11.5
Change Period (Y+Rc), s	5.0	6.0		5.0	5.0	6.0		5.0
Max Green Setting (Gmax), s	15.0	79.0		24.0	30.0	64.0		24.0
Max Q Clear Time (g_c+I1), s	2.2	5.5		4.0	7.1	4.5		6.9
Green Ext Time (p_c), s	0.0	3.7		0.6	0.7	1.8		0.6

Intersection Summary	
HCM 2010 Ctrl Delay	14.2
HCM 2010 LOS	B

Movement	EBL	EBT	EBR	WBL	WBT	WBR	NBL	NBT	NBR	SBL	SBT	SBR
Lane Configurations												
Traffic Volume (veh/h)	60	5	180	90	20	15	135	515	15	10	515	65
Future Volume (veh/h)	60	5	180	90	20	15	135	515	15	10	515	65
Number	7	4	14	3	8	18	5	2	12	1	6	16
Initial Q (Qb), veh	0	0	0	0	0	0	0	0	0	0	0	0
Ped-Bike Adj(A_pbT)	0.98		0.97	0.98		0.97	1.00		1.00	1.00		0.99
Parking Bus, Adj	1.00	1.00	1.00	1.00	1.00	1.00	1.00	1.00	1.00	1.00	1.00	1.00
Adj Sat Flow, veh/h/ln	1900	1863	1863	1863	1863	1900	1863	1863	1863	1863	1863	1863
Adj Flow Rate, veh/h	65	5	20	98	22	2	147	560	0	11	560	28
Adj No. of Lanes	0	1	1	1	1	0	1	1	1	1	1	1
Peak Hour Factor	0.92	0.92	0.92	0.92	0.92	0.92	0.92	0.92	0.92	0.92	0.92	0.92
Percent Heavy Veh, %	2	2	2	2	2	2	2	2	2	2	2	2
Cap, veh/h	381	24	309	347	336	31	409	878	746	365	725	612
Arrive On Green	0.20	0.20	0.20	0.20	0.20	0.20	0.09	0.47	0.00	0.01	0.39	0.39
Sat Flow, veh/h	1209	122	1544	1351	1679	153	1774	1863	1583	1774	1863	1571
Grp Volume(v), veh/h	70	0	20	98	0	24	147	560	0	11	560	28
Grp Sat Flow(s),veh/h/ln	1331	0	1544	1351	0	1831	1774	1863	1583	1774	1863	1571
Q Serve(g_s), s	1.9	0.0	0.5	3.3	0.0	0.5	2.2	11.3	0.0	0.2	13.1	0.6
Cycle Q Clear(g_c), s	2.5	0.0	0.5	5.8	0.0	0.5	2.2	11.3	0.0	0.2	13.1	0.6
Prop In Lane	0.93		1.00	1.00		0.08	1.00		1.00	1.00		1.00
Lane Grp Cap(c), veh/h	405	0	309	347	0	366	409	878	746	365	725	612
V/C Ratio(X)	0.17	0.00	0.06	0.28	0.00	0.07	0.36	0.64	0.00	0.03	0.77	0.05
Avail Cap(c_a), veh/h	819	0	773	754	0	917	782	1903	1618	883	1903	1605
HCM Platoon Ratio	1.00	1.00	1.00	1.00	1.00	1.00	1.00	1.00	1.00	1.00	1.00	1.00
Upstream Filter(I)	1.00	0.00	1.00	1.00	0.00	1.00	1.00	1.00	0.00	1.00	1.00	1.00
Uniform Delay (d), s/veh	17.1	0.0	16.2	19.4	0.0	16.2	9.2	10.0	0.0	9.6	13.3	9.5
Incr Delay (d2), s/veh	0.2	0.0	0.1	0.4	0.0	0.1	0.5	0.8	0.0	0.0	1.8	0.0
Initial Q Delay(d3),s/veh	0.0	0.0	0.0	0.0	0.0	0.0	0.0	0.0	0.0	0.0	0.0	0.0
%ile BackOfQ(50%),veh/ln	0.8	0.0	0.2	1.3	0.0	0.3	1.1	5.9	0.0	0.1	7.0	0.2
LnGrp Delay(d),s/veh	17.3	0.0	16.3	19.9	0.0	16.3	9.8	10.8	0.0	9.7	15.1	9.5
LnGrp LOS	B		B	B		B	A	B		A	B	A
Approach Vol, veh/h		90			122			707			599	
Approach Delay, s/veh		17.1			19.2			10.6			14.7	
Approach LOS		B			B			B			B	

Timer	1	2	3	4	5	6	7	8
Assigned Phs	1	2		4	5	6		8
Phs Duration (G+Y+Rc), s	5.4	29.5		15.0	9.5	25.4		15.0
Change Period (Y+Rc), s	5.0	6.0		5.0	5.0	6.0		5.0
Max Green Setting (Gmax), s	15.0	51.0		25.0	15.0	51.0		25.0
Max Q Clear Time (g_c+I1), s	2.2	13.3		4.5	4.2	15.1		7.8
Green Ext Time (p_c), s	0.0	4.0		0.4	0.3	4.1		0.3

Intersection Summary	
HCM 2010 Ctrl Delay	13.3
HCM 2010 LOS	B

Movement	EBL	EBT	EBR	WBL	WBT	WBR	NBL	NBT	NBR	SBL	SBT	SBR
Lane Configurations												
Traffic Volume (veh/h)	40	5	125	5	5	5	60	600	15	5	715	30
Future Volume (veh/h)	40	5	125	5	5	5	60	600	15	5	715	30
Number	7	4	14	3	8	18	5	2	12	1	6	16
Initial Q (Qb), veh	0	0	0	0	0	0	0	0	0	0	0	0
Ped-Bike Adj(A_pbT)	1.00		0.99	1.00		0.99	1.00		1.00	1.00		0.99
Parking Bus, Adj	1.00	1.00	1.00	1.00	1.00	1.00	1.00	1.00	1.00	1.00	1.00	1.00
Adj Sat Flow, veh/h/ln	1863	1863	1900	1863	1863	1863	1863	1863	1863	1863	1863	1863
Adj Flow Rate, veh/h	43	5	11	5	5	1	65	652	9	5	777	17
Adj No. of Lanes	1	1	0	1	1	1	1	1	1	1	1	1
Peak Hour Factor	0.92	0.92	0.92	0.92	0.92	0.92	0.92	0.92	0.92	0.92	0.92	0.92
Percent Heavy Veh, %	2	2	2	2	2	2	2	2	2	2	2	2
Cap, veh/h	60	63	139	9	175	147	84	1010	858	7	929	784
Arrive On Green	0.03	0.12	0.12	0.01	0.09	0.09	0.05	0.54	0.54	0.00	0.50	0.50
Sat Flow, veh/h	1774	515	1132	1774	1863	1564	1774	1863	1583	1774	1863	1572
Grp Volume(v), veh/h	43	0	16	5	5	1	65	652	9	5	777	17
Grp Sat Flow(s),veh/h/ln	1774	0	1646	1774	1863	1564	1774	1863	1583	1774	1863	1572
Q Serve(g_s), s	1.5	0.0	0.5	0.2	0.1	0.0	2.2	15.1	0.2	0.2	22.0	0.3
Cycle Q Clear(g_c), s	1.5	0.0	0.5	0.2	0.1	0.0	2.2	15.1	0.2	0.2	22.0	0.3
Prop In Lane	1.00		0.69	1.00		1.00	1.00		1.00	1.00		1.00
Lane Grp Cap(c), veh/h	60	0	202	9	175	147	84	1010	858	7	929	784
V/C Ratio(X)	0.72	0.00	0.08	0.53	0.03	0.01	0.77	0.65	0.01	0.71	0.84	0.02
Avail Cap(c_a), veh/h	578	0	563	578	637	535	723	1973	1677	723	1973	1665
HCM Platoon Ratio	1.00	1.00	1.00	1.00	1.00	1.00	1.00	1.00	1.00	1.00	1.00	1.00
Upstream Filter(I)	1.00	0.00	1.00	1.00	1.00	1.00	1.00	1.00	1.00	1.00	1.00	1.00
Uniform Delay (d), s/veh	29.4	0.0	23.9	30.4	25.3	25.2	28.9	9.9	6.5	30.5	13.2	7.8
Incr Delay (d2), s/veh	14.6	0.0	0.2	39.1	0.1	0.0	13.8	0.7	0.0	81.5	2.1	0.0
Initial Q Delay(d3),s/veh	0.0	0.0	0.0	0.0	0.0	0.0	0.0	0.0	0.0	0.0	0.0	0.0
%ile BackOfQ(50%),veh/ln	1.0	0.0	0.2	0.2	0.1	0.0	1.4	7.8	0.1	0.2	11.8	0.1
LnGrp Delay(d),s/veh	44.0	0.0	24.0	69.5	25.3	25.2	42.7	10.6	6.5	112.0	15.3	7.8
LnGrp LOS	D		C	E	C	C	D	B	A	F	B	A
Approach Vol, veh/h		59			11			726			799	
Approach Delay, s/veh		38.6			45.4			13.4			15.8	
Approach LOS		D			D			B			B	

Timer	1	2	3	4	5	6	7	8
Assigned Phs	1	2	3	4	5	6	7	8
Phs Duration (G+Y+Rc), s	5.2	38.3	5.3	12.5	7.9	35.6	7.1	10.8
Change Period (Y+Rc), s	5.0	5.0	5.0	5.0	5.0	5.0	5.0	5.0
Max Green Setting (Gmax), s	25.0	65.0	20.0	21.0	25.0	65.0	20.0	21.0
Max Q Clear Time (g_c+I1), s	2.2	17.1	2.2	2.5	4.2	24.0	3.5	2.1
Green Ext Time (p_c), s	0.0	5.1	0.0	0.0	0.1	6.6	0.1	0.0

Intersection Summary	
HCM 2010 Ctrl Delay	15.7
HCM 2010 LOS	B

Movement	EBL	EBT	EBR	WBL	WBT	WBR	NBL	NBT	NBR	SBL	SBT	SBR
Lane Configurations												
Traffic Volume (veh/h)	35	10	480	20	5	0	315	675	45	10	805	10
Future Volume (veh/h)	35	10	480	20	5	0	315	675	45	10	805	10
Number	3	8	18	7	4	14	1	6	16	5	2	12
Initial Q (Qb), veh	0	0	0	0	0	0	0	0	0	0	0	0
Ped-Bike Adj(A_pbT)	0.99		1.00	0.99		1.00	1.00		1.00	1.00		1.00
Parking Bus, Adj	1.00	1.00	1.00	1.00	1.00	1.00	1.00	1.00	1.00	1.00	1.00	1.00
Adj Sat Flow, veh/h/ln	1900	1863	1863	1900	1863	1900	1863	1863	1900	1863	1863	1863
Adj Flow Rate, veh/h	38	11	0	22	5	0	342	734	48	11	875	3
Adj No. of Lanes	0	1	1	0	1	0	1	2	0	1	2	1
Peak Hour Factor	0.92	0.92	0.92	0.92	0.92	0.92	0.92	0.92	0.92	0.92	0.92	0.92
Percent Heavy Veh, %	2	2	2	2	2	2	2	2	2	2	2	2
Cap, veh/h	195	31	117	200	31	0	411	2202	144	15	1521	680
Arrive On Green	0.09	0.07	0.00	0.09	0.07	0.00	0.23	0.65	0.65	0.01	0.43	0.43
Sat Flow, veh/h	1112	417	1583	1143	422	0	1774	3373	220	1774	3539	1583
Grp Volume(v), veh/h	49	0	0	27	0	0	342	385	397	11	875	3
Grp Sat Flow(s),veh/h/ln	1530	0	1583	1565	0	0	1774	1770	1824	1774	1770	1583
Q Serve(g_s), s	0.8	0.0	0.0	0.0	0.0	0.0	10.4	5.5	5.5	0.3	10.6	0.1
Cycle Q Clear(g_c), s	1.6	0.0	0.0	0.8	0.0	0.0	10.4	5.5	5.5	0.3	10.6	0.1
Prop In Lane	0.78		1.00	0.81		0.00	1.00		0.12	1.00		1.00
Lane Grp Cap(c), veh/h	253	0	117	258	0	0	411	1155	1190	15	1521	680
V/C Ratio(X)	0.19	0.00	0.00	0.10	0.00	0.00	0.83	0.33	0.33	0.74	0.58	0.00
Avail Cap(c_a), veh/h	667	0	560	796	0	0	2070	2315	2386	2070	4631	2072
HCM Platoon Ratio	1.00	1.00	1.00	1.00	1.00	1.00	1.00	1.00	1.00	1.00	1.00	1.00
Upstream Filter(I)	1.00	0.00	0.00	1.00	0.00	0.00	1.00	1.00	1.00	1.00	1.00	1.00
Uniform Delay (d), s/veh	24.6	0.0	0.0	24.2	0.0	0.0	20.7	4.4	4.4	28.0	12.2	9.2
Incr Delay (d2), s/veh	0.4	0.0	0.0	0.2	0.0	0.0	1.7	0.4	0.3	22.7	0.7	0.0
Initial Q Delay(d3),s/veh	0.0	0.0	0.0	0.0	0.0	0.0	0.0	0.0	0.0	0.0	0.0	0.0
%ile BackOfQ(50%),veh/ln	0.7	0.0	0.0	0.4	0.0	0.0	5.2	2.7	2.8	0.3	5.3	0.0
LnGrp Delay(d),s/veh	25.0	0.0	0.0	24.4	0.0	0.0	22.4	4.7	4.7	50.7	13.0	9.2
LnGrp LOS	C			C			C	A	A	D	B	A
Approach Vol, veh/h		49			27			1124			889	
Approach Delay, s/veh		25.0			24.4			10.1			13.4	
Approach LOS		C			C			B			B	

Timer	1	2	3	4	5	6	7	8
Assigned Phs	1	2		4	5	6		8
Phs Duration (G+Y+Rc), s	17.1	30.3		9.2	4.5	42.9		9.2
Change Period (Y+Rc), s	4.0	6.0		5.0	4.0	6.0		5.0
Max Green Setting (Gmax), s	66.0	74.0		25.0	66.0	74.0		20.0
Max Q Clear Time (g_c+I1), s	12.4	12.6		2.8	2.3	7.5		3.6
Green Ext Time (p_c), s	0.8	11.7		0.0	0.0	9.0		0.1

Intersection Summary	
HCM 2010 Ctrl Delay	12.0
HCM 2010 LOS	B

Movement	EBL	EBT	EBR	WBL	WBT	WBR	NBL	NBT	NBR	SBL	SBT	SBR
Lane Configurations												
Traffic Volume (veh/h)	30	0	70	10	5	10	135	1085	20	15	1275	65
Future Volume (veh/h)	30	0	70	10	5	10	135	1085	20	15	1275	65
Number	3	8	18	7	4	14	1	6	16	5	2	12
Initial Q (Qb), veh	0	0	0	0	0	0	0	0	0	0	0	0
Ped-Bike Adj(A_pbT)	1.00		1.00	1.00		1.00	1.00		1.00	1.00		1.00
Parking Bus, Adj	1.00	1.00	1.00	1.00	1.00	1.00	1.00	1.00	1.00	1.00	1.00	1.00
Adj Sat Flow, veh/h/ln	1900	1863	1863	1900	1863	1900	1863	1863	1900	1863	1863	1863
Adj Flow Rate, veh/h	33	0	1	11	5	1	147	1179	21	16	1386	38
Adj No. of Lanes	0	1	1	0	1	0	1	2	0	1	2	1
Peak Hour Factor	0.92	0.92	0.92	0.92	0.92	0.92	0.92	0.92	0.92	0.92	0.92	0.92
Percent Heavy Veh, %	2	2	2	2	2	2	2	2	2	2	2	2
Cap, veh/h	180	0	73	121	19	3	186	2603	46	20	2259	1011
Arrive On Green	0.06	0.00	0.05	0.06	0.05	0.05	0.10	0.73	0.73	0.01	0.64	0.64
Sat Flow, veh/h	1553	0	1583	701	414	70	1774	3558	63	1774	3539	1583
Grp Volume(v), veh/h	33	0	1	17	0	0	147	586	614	16	1386	38
Grp Sat Flow(s),veh/h/ln	1553	0	1583	1185	0	0	1774	1770	1852	1774	1770	1583
Q Serve(g_s), s	0.0	0.0	0.0	0.4	0.0	0.0	5.4	8.8	8.8	0.6	15.5	0.6
Cycle Q Clear(g_c), s	1.2	0.0	0.0	1.6	0.0	0.0	5.4	8.8	8.8	0.6	15.5	0.6
Prop In Lane	1.00		1.00	0.65		0.06	1.00		0.03	1.00		1.00
Lane Grp Cap(c), veh/h	203	0	73	162	0	0	186	1295	1355	20	2259	1011
V/C Ratio(X)	0.16	0.00	0.01	0.11	0.00	0.00	0.79	0.45	0.45	0.78	0.61	0.04
Avail Cap(c_a), veh/h	625	0	548	621	0	0	561	2292	2398	294	4050	1812
HCM Platoon Ratio	1.00	1.00	1.00	1.00	1.00	1.00	1.00	1.00	1.00	1.00	1.00	1.00
Upstream Filter(I)	1.00	0.00	1.00	1.00	0.00	0.00	1.00	1.00	1.00	1.00	1.00	1.00
Uniform Delay (d), s/veh	30.3	0.0	30.2	30.8	0.0	0.0	29.0	3.6	3.6	32.7	7.1	4.4
Incr Delay (d2), s/veh	0.1	0.0	0.0	0.1	0.0	0.0	2.8	0.5	0.5	20.7	0.6	0.0
Initial Q Delay(d3),s/veh	0.0	0.0	0.0	0.0	0.0	0.0	0.0	0.0	0.0	0.0	0.0	0.0
%ile BackOfQ(50%),veh/ln	0.6	0.0	0.0	0.3	0.0	0.0	2.8	4.4	4.6	0.4	7.5	0.3
LnGrp Delay(d),s/veh	30.4	0.0	30.3	30.9	0.0	0.0	31.8	4.1	4.1	53.5	7.7	4.5
LnGrp LOS	C		C	C			C	A	A	D	A	A
Approach Vol, veh/h		34			17			1347			1440	
Approach Delay, s/veh		30.4			30.9			7.1			8.1	
Approach LOS		C			C			A			A	

Timer	1	2	3	4	5	6	7	8
Assigned Phs	1	2		4	5	6		8
Phs Duration (G+Y+Rc), s	11.0	47.4		8.0	4.8	53.6		8.0
Change Period (Y+Rc), s	4.0	5.0		5.0	4.0	5.0		5.0
Max Green Setting (Gmax), s	21.0	76.0		23.0	11.0	86.0		23.0
Max Q Clear Time (g_c+I1), s	7.4	17.5		3.6	2.6	10.8		3.2
Green Ext Time (p_c), s	0.1	24.9		0.0	0.0	18.3		0.0

Intersection Summary	
HCM 2010 Ctrl Delay	8.1
HCM 2010 LOS	A

Movement	EBL	EBT	EBR	WBL	WBT	WBR	NBL	NBT	NBR	SBL	SBT	SBR
Lane Configurations												
Traffic Volume (veh/h)	55	5	35	40	15	45	110	1225	60	25	1225	45
Future Volume (veh/h)	55	5	35	40	15	45	110	1225	60	25	1225	45
Number	3	8	18	7	4	14	1	6	16	5	2	12
Initial Q (Qb), veh	0	0	0	0	0	0	0	0	0	0	0	0
Ped-Bike Adj(A_pbT)	1.00		1.00	1.00		1.00	1.00		1.00	1.00		1.00
Parking Bus, Adj	1.00	1.00	1.00	1.00	1.00	1.00	1.00	1.00	1.00	1.00	1.00	1.00
Adj Sat Flow, veh/h/ln	1900	1863	1863	1863	1863	1900	1863	1863	1863	1863	1863	1863
Adj Flow Rate, veh/h	60	5	1	43	16	1	120	1332	50	27	1332	35
Adj No. of Lanes	0	1	1	1	1	0	1	2	1	1	2	1
Peak Hour Factor	0.92	0.92	0.92	0.92	0.92	0.92	0.92	0.92	0.92	0.92	0.92	0.92
Percent Heavy Veh, %	2	2	2	2	2	2	2	2	2	2	2	2
Cap, veh/h	160	12	153	111	168	10	142	2776	1242	39	2571	1150
Arrive On Green	0.10	0.10	0.10	0.10	0.10	0.10	0.08	0.78	0.78	0.02	0.73	0.73
Sat Flow, veh/h	1193	120	1578	1401	1735	108	1774	3539	1583	1774	3539	1583
Grp Volume(v), veh/h	65	0	1	43	0	17	120	1332	50	27	1332	35
Grp Sat Flow(s),veh/h/ln	1313	0	1578	1401	0	1843	1774	1770	1583	1774	1770	1583
Q Serve(g_s), s	6.6	0.0	0.1	4.7	0.0	1.3	10.3	20.2	1.1	2.3	25.6	1.0
Cycle Q Clear(g_c), s	7.9	0.0	0.1	12.5	0.0	1.3	10.3	20.2	1.1	2.3	25.6	1.0
Prop In Lane	0.92		1.00	1.00		0.06	1.00		1.00	1.00		1.00
Lane Grp Cap(c), veh/h	172	0	153	111	0	178	142	2776	1242	39	2571	1150
V/C Ratio(X)	0.38	0.00	0.01	0.39	0.00	0.10	0.85	0.48	0.04	0.69	0.52	0.03
Avail Cap(c_a), veh/h	254	0	244	192	0	285	240	2776	1242	240	2571	1150
HCM Platoon Ratio	1.00	1.00	1.00	1.00	1.00	1.00	1.00	1.00	1.00	1.00	1.00	1.00
Upstream Filter(I)	1.00	0.00	1.00	1.00	0.00	1.00	0.70	0.70	0.70	1.00	1.00	1.00
Uniform Delay (d), s/veh	67.3	0.0	63.3	72.8	0.0	63.8	70.4	5.8	3.7	75.2	9.3	5.9
Incr Delay (d2), s/veh	1.4	0.0	0.0	2.2	0.0	0.2	3.7	0.4	0.0	7.6	0.7	0.0
Initial Q Delay(d3),s/veh	0.0	0.0	0.0	0.0	0.0	0.0	0.0	0.0	0.0	0.0	0.0	0.0
%ile BackOfQ(50%),veh/ln	2.7	0.0	0.0	1.9	0.0	0.7	5.2	10.0	0.5	1.2	12.7	0.4
LnGrp Delay(d),s/veh	68.7	0.0	63.3	75.0	0.0	64.1	74.0	6.2	3.8	82.9	10.0	6.0
LnGrp LOS	E		E	E		E	E	A	A	F	B	A
Approach Vol, veh/h		66			60			1502			1394	
Approach Delay, s/veh		68.6			71.9			11.5			11.3	
Approach LOS		E			E			B			B	

Timer	1	2	3	4	5	6	7	8
Assigned Phs	1	2		4	5	6		8
Phs Duration (G+Y+Rc), s	16.4	118.6		20.0	7.4	127.6		20.0
Change Period (Y+Rc), s	4.0	6.0		5.0	4.0	6.0		5.0
Max Green Setting (Gmax), s	21.0	95.0		24.0	21.0	95.0		24.0
Max Q Clear Time (g_c+I1), s	12.3	27.6		14.5	4.3	22.2		9.9
Green Ext Time (p_c), s	0.1	24.4		0.1	0.0	25.2		0.1

Intersection Summary	
HCM 2010 Ctrl Delay	13.9
HCM 2010 LOS	B

Movement	EBL	EBT	EBR	WBL	WBT	WBR	NBL	NBT	NBR	SBL	SBT	SBR
Lane Configurations												
Traffic Volume (veh/h)	135	10	220	10	10	10	425	1310	15	80	1185	95
Future Volume (veh/h)	135	10	220	10	10	10	425	1310	15	80	1185	95
Number	3	8	18	7	4	14	1	6	16	5	2	12
Initial Q (Qb), veh	0	0	0	0	0	0	0	0	0	0	0	0
Ped-Bike Adj(A_pbT)	1.00		0.98	1.00		0.98	1.00		1.00	1.00		1.00
Parking Bus, Adj	1.00	1.00	1.00	1.00	1.00	1.00	1.00	1.00	1.00	1.00	1.00	1.00
Adj Sat Flow, veh/h/ln	1900	1863	1863	1900	1863	1900	1863	1863	1900	1863	1863	1863
Adj Flow Rate, veh/h	147	11	67	11	11	3	462	1424	16	87	1288	76
Adj No. of Lanes	0	1	2	0	1	0	2	2	0	1	2	1
Peak Hour Factor	0.92	0.92	0.92	0.92	0.92	0.92	0.92	0.92	0.92	0.92	0.92	0.92
Percent Heavy Veh, %	2	2	2	2	2	2	2	2	2	2	2	2
Cap, veh/h	220	16	825	60	60	16	601	2033	23	147	1683	947
Arrive On Green	0.13	0.13	0.12	0.08	0.08	0.05	0.17	0.57	0.55	0.08	0.48	0.48
Sat Flow, veh/h	1656	124	2731	783	783	214	3442	3585	40	1774	3539	1577
Grp Volume(v), veh/h	158	0	67	25	0	0	462	703	737	87	1288	76
Grp Sat Flow(s),veh/h/ln	1780	0	1365	1780	0	0	1721	1770	1856	1774	1770	1577
Q Serve(g_s), s	9.6	0.0	2.0	1.5	0.0	0.0	14.6	32.4	32.5	5.4	34.2	2.3
Cycle Q Clear(g_c), s	9.6	0.0	2.0	1.5	0.0	0.0	14.6	32.4	32.5	5.4	34.2	2.3
Prop In Lane	0.93		1.00	0.44		0.12	1.00		0.02	1.00		1.00
Lane Grp Cap(c), veh/h	237	0	825	136	0	0	601	1004	1053	147	1683	947
V/C Ratio(X)	0.67	0.00	0.08	0.18	0.00	0.00	0.77	0.70	0.70	0.59	0.77	0.08
Avail Cap(c_a), veh/h	532	0	1278	485	0	0	1753	3015	3162	234	4694	2289
HCM Platoon Ratio	1.00	1.00	1.00	1.00	1.00	1.00	1.00	1.00	1.00	1.00	1.00	1.00
Upstream Filter(I)	1.00	0.00	1.00	1.00	0.00	0.00	1.00	1.00	1.00	1.00	1.00	1.00
Uniform Delay (d), s/veh	47.0	0.0	28.7	49.4	0.0	0.0	44.8	17.7	17.7	50.3	24.6	9.6
Incr Delay (d2), s/veh	1.2	0.0	0.0	0.6	0.0	0.0	0.8	1.3	1.2	1.4	1.1	0.1
Initial Q Delay(d3),s/veh	0.0	0.0	0.0	0.0	0.0	0.0	0.0	0.0	0.0	0.0	0.0	0.0
%ile BackOfQ(50%),veh/ln	4.8	0.0	0.8	0.8	0.0	0.0	7.0	16.2	17.0	2.7	16.9	1.3
LnGrp Delay(d),s/veh	48.2	0.0	28.7	50.1	0.0	0.0	45.6	19.0	18.9	51.8	25.7	9.6
LnGrp LOS	D		C	D			D	B	B	D	C	A
Approach Vol, veh/h		225			25			1902			1451	
Approach Delay, s/veh		42.4			50.1			25.4			26.4	
Approach LOS		D			D			C			C	

Timer	1	2	3	4	5	6	7	8
Assigned Phs	1	2		4	5	6		8
Phs Duration (G+Y+Rc), s	23.9	58.1		12.7	13.4	68.6		19.1
Change Period (Y+Rc), s	6.0	6.0		7.0	6.0	6.0		7.0
Max Green Setting (Gmax), s	56.0	149.0		28.0	13.0	192.0		31.0
Max Q Clear Time (g_c+I1), s	16.6	36.2		3.5	7.4	34.5		11.6
Green Ext Time (p_c), s	1.3	16.0		0.0	0.1	16.4		0.5

Intersection Summary	
HCM 2010 Ctrl Delay	27.0
HCM 2010 LOS	C

Notes

Movement	EBL	EBT	EBR	WBL	WBT	WBR	NBL	NBT	NBR	SBL	SBT	SBR
Lane Configurations												
Traffic Volume (veh/h)	5	5	5	60	0	45	5	1745	90	30	1385	5
Future Volume (veh/h)	5	5	5	60	0	45	5	1745	90	30	1385	5
Number	3	8	18	7	4	14	1	6	16	5	2	12
Initial Q (Qb), veh	0	0	0	0	0	0	0	0	0	0	0	0
Ped-Bike Adj(A_pbT)	0.98		0.97	0.98		0.97	1.00		1.00	1.00		1.00
Parking Bus, Adj	1.00	1.00	1.00	1.00	1.00	1.00	1.00	1.00	1.00	1.00	1.00	1.00
Adj Sat Flow, veh/h/ln	1900	1863	1900	1863	1863	1900	1863	1863	1900	1863	1863	1900
Adj Flow Rate, veh/h	5	5	1	65	0	1	5	1897	96	33	1505	5
Adj No. of Lanes	0	1	0	1	1	0	1	2	0	1	2	0
Peak Hour Factor	0.92	0.92	0.92	0.92	0.92	0.92	0.92	0.92	0.92	0.92	0.92	0.92
Percent Heavy Veh, %	2	2	2	2	2	2	2	2	2	2	2	2
Cap, veh/h	90	80	13	176	0	138	11	2706	136	63	2961	10
Arrive On Green	0.09	0.09	0.08	0.09	0.00	0.08	0.01	0.79	0.78	0.04	0.82	0.81
Sat Flow, veh/h	584	895	148	1372	0	1543	1774	3429	172	1774	3618	12
Grp Volume(v), veh/h	11	0	0	65	0	1	5	971	1022	33	736	774
Grp Sat Flow(s),veh/h/ln	1627	0	0	1372	0	1543	1774	1770	1832	1774	1770	1861
Q Serve(g_s), s	0.0	0.0	0.0	5.4	0.0	0.1	0.4	35.9	37.3	2.6	18.1	18.1
Cycle Q Clear(g_c), s	0.8	0.0	0.0	6.1	0.0	0.1	0.4	35.9	37.3	2.6	18.1	18.1
Prop In Lane	0.45		0.09	1.00		1.00	1.00		0.09	1.00		0.01
Lane Grp Cap(c), veh/h	183	0	0	176	0	138	11	1396	1446	63	1448	1523
V/C Ratio(X)	0.06	0.00	0.00	0.37	0.00	0.01	0.45	0.70	0.71	0.52	0.51	0.51
Avail Cap(c_a), veh/h	312	0	0	289	0	265	101	1396	1446	101	1448	1523
HCM Platoon Ratio	1.00	1.00	1.00	1.00	1.00	1.00	1.00	1.00	1.00	1.00	1.00	1.00
Upstream Filter(I)	1.00	0.00	0.00	1.00	0.00	1.00	0.64	0.64	0.64	1.00	1.00	1.00
Uniform Delay (d), s/veh	58.4	0.0	0.0	60.7	0.0	58.5	69.3	6.9	7.1	66.3	3.9	4.0
Incr Delay (d2), s/veh	0.1	0.0	0.0	1.3	0.0	0.0	6.5	1.9	1.9	2.5	1.3	1.2
Initial Q Delay(d3),s/veh	0.0	0.0	0.0	0.0	0.0	0.0	0.0	0.0	0.0	0.0	0.0	0.0
%ile BackOfQ(50%),veh/ln	0.4	0.0	0.0	2.5	0.0	0.0	0.2	18.0	19.2	1.3	9.1	9.5
LnGrp Delay(d),s/veh	58.6	0.0	0.0	62.0	0.0	58.6	75.8	8.8	9.0	68.8	5.2	5.2
LnGrp LOS	E			E		E	E	A	A	E	A	A
Approach Vol, veh/h		11			66			1998			1543	
Approach Delay, s/veh		58.6			62.0			9.0			6.6	
Approach LOS		E			E			A			A	

Timer	1	2	3	4	5	6	7	8
Assigned Phs	1	2		4	5	6		8
Phs Duration (G+Y+Rc), s	4.9	118.6		16.5	9.0	114.5		16.5
Change Period (Y+Rc), s	4.0	5.0		5.0	4.0	5.0		5.0
Max Green Setting (Gmax), s	8.0	95.0		23.0	8.0	95.0		23.0
Max Q Clear Time (g_c+I1), s	2.4	20.1		8.1	4.6	39.3		2.8
Green Ext Time (p_c), s	0.0	29.0		0.1	0.0	41.2		0.0

Intersection Summary	
HCM 2010 Ctrl Delay	9.1
HCM 2010 LOS	A

Movement	EBL	EBT	EBR	WBL	WBT	WBR	NBL	NBT	NBR	SBL	SBT	SBR
Lane Configurations												
Traffic Volume (veh/h)	90	5	5	105	15	15	5	1725	20	10	1230	185
Future Volume (veh/h)	90	5	5	105	15	15	5	1725	20	10	1230	185
Number	3	8	18	7	4	14	1	6	16	5	2	12
Initial Q (Qb), veh	0	0	0	0	0	0	0	0	0	0	0	0
Ped-Bike Adj(A_pbT)	1.00		1.00	1.00		1.00	1.00		1.00	1.00		1.00
Parking Bus, Adj	1.00	1.00	1.00	1.00	1.00	1.00	1.00	1.00	1.00	1.00	1.00	1.00
Adj Sat Flow, veh/h/ln	1900	1863	1900	1900	1863	1900	1863	1863	1900	1863	1863	1863
Adj Flow Rate, veh/h	98	5	3	114	16	12	5	1875	21	11	1337	141
Adj No. of Lanes	0	1	0	0	1	0	1	2	0	1	2	1
Peak Hour Factor	0.92	0.92	0.92	0.92	0.92	0.92	0.92	0.92	0.92	0.92	0.92	0.92
Percent Heavy Veh, %	2	2	2	2	2	2	2	2	2	2	2	2
Cap, veh/h	210	8	5	198	20	15	7	2805	31	14	2782	1243
Arrive On Green	0.11	0.11	0.10	0.11	0.11	0.10	0.00	0.78	0.77	0.01	0.79	0.79
Sat Flow, veh/h	1387	71	42	1312	184	138	1774	3585	40	1774	3539	1581
Grp Volume(v), veh/h	106	0	0	142	0	0	5	924	972	11	1337	141
Grp Sat Flow(s),veh/h/ln	1500	0	0	1634	0	0	1774	1770	1856	1774	1770	1581
Q Serve(g_s), s	0.0	0.0	0.0	1.8	0.0	0.0	0.3	28.5	28.8	0.7	15.6	2.5
Cycle Q Clear(g_c), s	7.9	0.0	0.0	9.8	0.0	0.0	0.3	28.5	28.8	0.7	15.6	2.5
Prop In Lane	0.92		0.03	0.80		0.08	1.00		0.02	1.00		1.00
Lane Grp Cap(c), veh/h	223	0	0	234	0	0	7	1384	1452	14	2782	1243
V/C Ratio(X)	0.48	0.00	0.00	0.61	0.00	0.00	0.73	0.67	0.67	0.81	0.48	0.11
Avail Cap(c_a), veh/h	430	0	0	450	0	0	118	1384	1452	118	2782	1243
HCM Platoon Ratio	1.00	1.00	1.00	1.00	1.00	1.00	1.00	1.00	1.00	1.00	1.00	1.00
Upstream Filter(I)	1.00	0.00	0.00	1.00	0.00	0.00	0.64	0.64	0.64	0.86	0.86	0.86
Uniform Delay (d), s/veh	51.1	0.0	0.0	51.8	0.0	0.0	59.7	5.9	6.0	59.5	4.4	3.0
Incr Delay (d2), s/veh	1.6	0.0	0.0	2.5	0.0	0.0	30.1	1.7	1.6	28.7	0.5	0.2
Initial Q Delay(d3),s/veh	0.0	0.0	0.0	0.0	0.0	0.0	0.0	0.0	0.0	0.0	0.0	0.0
%ile BackOfQ(50%),veh/ln	3.5	0.0	0.0	4.7	0.0	0.0	0.2	14.2	15.0	0.5	7.6	1.2
LnGrp Delay(d),s/veh	52.6	0.0	0.0	54.3	0.0	0.0	89.8	7.6	7.6	88.2	4.9	3.2
LnGrp LOS	D			D			F	A	A	F	A	A
Approach Vol, veh/h		106			142			1901			1489	
Approach Delay, s/veh		52.6			54.3			7.8			5.4	
Approach LOS		D			D			A			A	

Timer	1	2	3	4	5	6	7	8
Assigned Phs	1	2		4	5	6		8
Phs Duration (G+Y+Rc), s	4.5	98.3		17.2	4.9	97.9		17.2
Change Period (Y+Rc), s	4.0	5.0		5.0	4.0	5.0		5.0
Max Green Setting (Gmax), s	8.0	68.0		30.0	8.0	68.0		30.0
Max Q Clear Time (g_c+I1), s	2.3	17.6		11.8	2.7	30.8		9.9
Green Ext Time (p_c), s	0.0	31.2		0.5	0.0	32.5		0.3

Intersection Summary	
HCM 2010 Ctrl Delay	9.9
HCM 2010 LOS	A

Movement	EBL	EBT	EBR	WBL	WBT	WBR	NBL	NBT	NBR	SBL	SBT	SBR
Lane Configurations												
Traffic Volume (veh/h)	145	30	20	145	25	35	25	1550	75	10	1270	70
Future Volume (veh/h)	145	30	20	145	25	35	25	1550	75	10	1270	70
Number	3	8	18	7	4	14	1	6	16	5	2	12
Initial Q (Qb), veh	0	0	0	0	0	0	0	0	0	0	0	0
Ped-Bike Adj(A_pbT)	0.99		0.98	0.99		0.98	1.00		1.00	1.00		1.00
Parking Bus, Adj	1.00	1.00	1.00	1.00	1.00	1.00	1.00	1.00	1.00	1.00	1.00	1.00
Adj Sat Flow, veh/h/ln	1900	1863	1863	1863	1863	1900	1863	1863	1900	1863	1863	1900
Adj Flow Rate, veh/h	158	33	2	158	27	5	27	1685	80	11	1380	73
Adj No. of Lanes	0	1	1	1	1	0	1	2	0	1	2	0
Peak Hour Factor	0.92	0.92	0.92	0.92	0.92	0.92	0.92	0.92	0.92	0.92	0.92	0.92
Percent Heavy Veh, %	2	2	2	2	2	2	2	2	2	2	2	2
Cap, veh/h	229	38	265	307	259	48	34	2536	120	13	2480	131
Arrive On Green	0.17	0.17	0.17	0.17	0.17	0.16	0.04	1.00	1.00	0.01	0.73	0.72
Sat Flow, veh/h	1070	224	1558	1358	1525	282	1774	3441	163	1774	3420	181
Grp Volume(v), veh/h	191	0	2	158	0	32	27	862	903	11	713	740
Grp Sat Flow(s),veh/h/ln	1294	0	1558	1358	0	1807	1774	1770	1834	1774	1770	1831
Q Serve(g_s), s	18.4	0.0	0.1	0.0	0.0	2.1	2.1	0.0	0.0	0.9	25.9	26.2
Cycle Q Clear(g_c), s	20.5	0.0	0.1	13.4	0.0	2.1	2.1	0.0	0.0	0.9	25.9	26.2
Prop In Lane	0.83		1.00	1.00		0.16	1.00		0.09	1.00		0.10
Lane Grp Cap(c), veh/h	267	0	265	307	0	307	34	1304	1352	13	1283	1328
V/C Ratio(X)	0.72	0.00	0.01	0.51	0.00	0.10	0.79	0.66	0.67	0.83	0.56	0.56
Avail Cap(c_a), veh/h	310	0	312	348	0	361	139	1304	1352	139	1283	1328
HCM Platoon Ratio	1.00	1.00	1.00	1.00	1.00	1.00	2.00	2.00	2.00	1.00	1.00	1.00
Upstream Filter(I)	1.00	0.00	1.00	1.00	0.00	1.00	0.50	0.50	0.50	0.86	0.86	0.86
Uniform Delay (d), s/veh	57.8	0.0	48.3	53.8	0.0	49.2	67.0	0.0	0.0	69.4	8.8	8.9
Incr Delay (d2), s/veh	6.5	0.0	0.0	1.3	0.0	0.1	7.6	1.3	1.3	32.4	1.5	1.5
Initial Q Delay(d3),s/veh	0.0	0.0	0.0	0.0	0.0	0.0	0.0	0.0	0.0	0.0	0.0	0.0
%ile BackOfQ(50%),veh/ln	7.7	0.0	0.1	5.8	0.0	1.1	1.1	0.5	0.5	0.5	13.0	13.7
LnGrp Delay(d),s/veh	64.2	0.0	48.3	55.1	0.0	49.3	74.7	1.3	1.3	101.8	10.3	10.4
LnGrp LOS	E		D	E		D	E	A	A	F	B	B
Approach Vol, veh/h		193			190			1792			1464	
Approach Delay, s/veh		64.1			54.2			2.4			11.0	
Approach LOS		E			D			A			B	

Timer	1	2	3	4	5	6	7	8
Assigned Phs	1	2		4	5	6		8
Phs Duration (G+Y+Rc), s	6.7	105.5		27.8	5.0	107.2		27.8
Change Period (Y+Rc), s	4.0	5.0		5.0	4.0	5.0		5.0
Max Green Setting (Gmax), s	11.0	88.0		27.0	11.0	88.0		27.0
Max Q Clear Time (g_c+I1), s	4.1	28.2		15.4	2.9	2.0		22.5
Green Ext Time (p_c), s	0.0	25.1		0.5	0.0	43.0		0.3

Intersection Summary	
HCM 2010 Ctrl Delay	11.9
HCM 2010 LOS	B

Movement	EBL	EBT	EBR	WBL	WBT	WBR	NBL	NBT	NBR	SBL	SBT	SBR
Lane Configurations												
Traffic Volume (veh/h)	15	110	35	95	75	715	25	865	120	515	860	20
Future Volume (veh/h)	15	110	35	95	75	715	25	865	120	515	860	20
Number	7	4	14	3	8	18	1	6	16	5	2	12
Initial Q (Qb), veh	0	0	0	0	0	0	0	0	0	0	0	0
Ped-Bike Adj(A_pbT)	0.99		0.99	0.99		0.99	1.00		1.00	1.00		1.00
Parking Bus, Adj	1.00	1.00	1.00	1.00	1.00	1.00	1.00	1.00	1.00	1.00	1.00	1.00
Adj Sat Flow, veh/h/ln	1900	1863	1863	1863	1863	1863	1863	1863	1863	1863	1863	1900
Adj Flow Rate, veh/h	16	120	5	103	82	439	27	940	53	560	935	21
Adj No. of Lanes	0	1	1	1	1	1	1	2	1	2	2	0
Peak Hour Factor	0.92	0.92	0.92	0.92	0.92	0.92	0.92	0.92	0.92	0.92	0.92	0.92
Percent Heavy Veh, %	2	2	2	2	2	2	2	2	2	2	2	2
Cap, veh/h	52	341	328	353	567	478	34	1527	680	614	2090	47
Arrive On Green	0.21	0.21	0.21	0.07	0.30	0.30	0.02	0.43	0.43	0.36	1.00	1.00
Sat Flow, veh/h	110	1627	1563	1774	1863	1569	1774	3539	1576	3442	3539	79
Grp Volume(v), veh/h	136	0	5	103	82	439	27	940	53	560	468	488
Grp Sat Flow(s),veh/h/ln	1737	0	1563	1774	1863	1569	1774	1770	1576	1721	1770	1849
Q Serve(g_s), s	0.0	0.0	0.4	6.1	4.5	37.8	2.1	28.8	2.8	21.7	0.0	0.0
Cycle Q Clear(g_c), s	8.7	0.0	0.4	6.1	4.5	37.8	2.1	28.8	2.8	21.7	0.0	0.0
Prop In Lane	0.12		1.00	1.00		1.00	1.00		1.00	1.00		0.04
Lane Grp Cap(c), veh/h	393	0	328	353	567	478	34	1527	680	614	1045	1092
V/C Ratio(X)	0.35	0.00	0.02	0.29	0.14	0.92	0.79	0.62	0.08	0.91	0.45	0.45
Avail Cap(c_a), veh/h	393	0	328	528	665	560	177	1527	680	836	1045	1092
HCM Platoon Ratio	1.00	1.00	1.00	1.00	1.00	1.00	1.00	1.00	1.00	2.00	2.00	2.00
Upstream Filter(I)	1.00	0.00	1.00	1.00	1.00	1.00	0.79	0.79	0.79	0.74	0.74	0.74
Uniform Delay (d), s/veh	47.1	0.0	43.8	37.9	35.4	47.0	68.4	30.8	23.4	44.0	0.0	0.0
Incr Delay (d2), s/veh	0.5	0.0	0.0	0.5	0.1	18.7	11.4	1.5	0.2	7.4	1.0	1.0
Initial Q Delay(d3),s/veh	0.0	0.0	0.0	0.0	0.0	0.0	0.0	0.0	0.0	0.0	0.0	0.0
%ile BackOfQ(50%),veh/ln	4.6	0.0	0.2	3.0	2.3	18.9	1.2	14.4	1.2	10.9	0.3	0.3
LnGrp Delay(d),s/veh	47.7	0.0	43.9	38.3	35.5	65.7	79.8	32.3	23.6	51.4	1.0	1.0
LnGrp LOS	D		D	D	D	E	E	C	C	D	A	A
Approach Vol, veh/h		141			624			1020			1516	
Approach Delay, s/veh		47.5			57.2			33.1			19.6	
Approach LOS		D			E			C			B	

Timer	1	2	3	4	5	6	7	8
Assigned Phs	1	2	3	4	5	6		8
Phs Duration (G+Y+Rc), s	6.7	86.7	13.2	33.4	29.0	64.4		46.6
Change Period (Y+Rc), s	4.0	5.0	5.0	5.0	4.0	5.0		5.0
Max Green Setting (Gmax), s	14.0	63.0	22.0	22.0	34.0	43.0		49.0
Max Q Clear Time (g_c+I1), s	4.1	2.0	8.1	10.7	23.7	30.8		39.8
Green Ext Time (p_c), s	0.0	12.0	0.3	0.4	1.2	6.8		1.8

Intersection Summary	
HCM 2010 Ctrl Delay	32.1
HCM 2010 LOS	C

Notes

APPENDIX C

LEVEL OF SERVICE CALCULATIONS

- Base Year 2022 PM Peak

HCM 2010 Signalized Intersection Summary
1: Napilihau Street

08/09/2017

Movement	EBL	EBT	EBR	WBL	WBT	WBR	NBL	NBT	NBR	SBL	SBT	SBR
Lane Configurations												
Traffic Volume (veh/h)	55	25	370	60	25	5	380	215	65	10	280	75
Future Volume (veh/h)	55	25	370	60	25	5	380	215	65	10	280	75
Number	7	4	14	3	8	18	5	2	12	1	6	16
Initial Q (Qb), veh	0	0	0	0	0	0	0	0	0	0	0	0
Ped-Bike Adj(A_pbT)	1.00		1.00	1.00		1.00	1.00		1.00	1.00		1.00
Parking Bus, Adj	1.00	1.00	1.00	1.00	1.00	1.00	1.00	1.00	1.00	1.00	1.00	1.00
Adj Sat Flow, veh/h/ln	1900	1863	1863	1863	1863	1900	1863	1863	1863	1863	1863	1863
Adj Flow Rate, veh/h	60	27	24	65	27	1	413	234	45	11	304	20
Adj No. of Lanes	0	1	1	1	1	0	1	1	1	1	1	1
Peak Hour Factor	0.92	0.92	0.92	0.92	0.92	0.92	0.92	0.92	0.92	0.92	0.92	0.92
Percent Heavy Veh, %	2	2	2	2	2	2	2	2	2	2	2	2
Cap, veh/h	232	72	184	236	207	8	501	1013	861	15	503	428
Arrive On Green	0.12	0.12	0.12	0.12	0.12	0.12	0.28	0.54	0.54	0.01	0.27	0.27
Sat Flow, veh/h	912	622	1583	1348	1785	66	1774	1863	1583	1774	1863	1583
Grp Volume(v), veh/h	87	0	24	65	0	28	413	234	45	11	304	20
Grp Sat Flow(s),veh/h/ln	1534	0	1583	1348	0	1851	1774	1863	1583	1774	1863	1583
Q Serve(g_s), s	1.8	0.0	0.7	2.3	0.0	0.7	10.5	3.2	0.6	0.3	6.9	0.5
Cycle Q Clear(g_c), s	2.5	0.0	0.7	4.8	0.0	0.7	10.5	3.2	0.6	0.3	6.9	0.5
Prop In Lane	0.69		1.00	1.00		0.04	1.00		1.00	1.00		1.00
Lane Grp Cap(c), veh/h	304	0	184	236	0	215	501	1013	861	15	503	428
V/C Ratio(X)	0.29	0.00	0.13	0.28	0.00	0.13	0.82	0.23	0.05	0.73	0.60	0.05
Avail Cap(c_a), veh/h	874	0	787	749	0	920	1102	3046	2590	551	2468	2098
HCM Platoon Ratio	1.00	1.00	1.00	1.00	1.00	1.00	1.00	1.00	1.00	1.00	1.00	1.00
Upstream Filter(I)	1.00	0.00	1.00	1.00	0.00	1.00	1.00	1.00	1.00	1.00	1.00	1.00
Uniform Delay (d), s/veh	19.9	0.0	19.2	22.2	0.0	19.2	16.2	5.7	5.2	23.9	15.4	13.0
Incr Delay (d2), s/veh	0.5	0.0	0.3	0.6	0.0	0.3	3.5	0.2	0.1	49.1	2.5	0.1
Initial Q Delay(d3),s/veh	0.0	0.0	0.0	0.0	0.0	0.0	0.0	0.0	0.0	0.0	0.0	0.0
%ile BackOfQ(50%),veh/ln	1.1	0.0	0.3	0.9	0.0	0.4	5.5	1.7	0.3	0.3	3.8	0.2
LnGrp Delay(d),s/veh	20.4	0.0	19.5	22.8	0.0	19.4	19.7	6.0	5.2	73.0	17.9	13.1
LnGrp LOS	C		B	C		B	B	A	A	E	B	B
Approach Vol, veh/h		111			93			692			335	
Approach Delay, s/veh		20.2			21.8			14.1			19.4	
Approach LOS		C			C			B			B	

Timer	1	2	3	4	5	6	7	8
Assigned Phs	1	2		4	5	6		8
Phs Duration (G+Y+Rc), s	5.4	32.3		10.6	18.6	19.0		10.6
Change Period (Y+Rc), s	5.0	6.0		5.0	5.0	6.0		5.0
Max Green Setting (Gmax), s	15.0	79.0		24.0	30.0	64.0		24.0
Max Q Clear Time (g_c+I1), s	2.3	5.2		4.5	12.5	8.9		6.8
Green Ext Time (p_c), s	0.0	3.4		0.5	1.2	4.2		0.2

Intersection Summary	
HCM 2010 Ctrl Delay	16.7
HCM 2010 LOS	B

Movement	EBL	EBT	EBR	WBL	WBT	WBR	NBL	NBT	NBR	SBL	SBT	SBR
Lane Configurations												
Traffic Volume (veh/h)	75	20	150	45	15	10	195	585	45	25	570	80
Future Volume (veh/h)	75	20	150	45	15	10	195	585	45	25	570	80
Number	7	4	14	3	8	18	5	2	12	1	6	16
Initial Q (Qb), veh	0	0	0	0	0	0	0	0	0	0	0	0
Ped-Bike Adj(A_pbT)	1.00		1.00	1.00		1.00	1.00		1.00	1.00		1.00
Parking Bus, Adj	1.00	1.00	1.00	1.00	1.00	1.00	1.00	1.00	1.00	1.00	1.00	1.00
Adj Sat Flow, veh/h/ln	1900	1863	1863	1863	1863	1900	1863	1863	1863	1863	1863	1863
Adj Flow Rate, veh/h	82	22	14	49	16	1	212	636	0	27	620	44
Adj No. of Lanes	0	1	1	1	1	0	1	1	1	1	1	1
Peak Hour Factor	0.92	0.92	0.92	0.92	0.92	0.92	0.92	0.92	0.92	0.92	0.92	0.92
Percent Heavy Veh, %	2	2	2	2	2	2	2	2	2	2	2	2
Cap, veh/h	275	55	207	243	227	14	447	960	816	392	802	679
Arrive On Green	0.13	0.13	0.13	0.13	0.13	0.13	0.10	0.52	0.00	0.02	0.43	0.43
Sat Flow, veh/h	1075	422	1583	1367	1735	108	1774	1863	1583	1774	1863	1576
Grp Volume(v), veh/h	104	0	14	49	0	17	212	636	0	27	620	44
Grp Sat Flow(s),veh/h/ln	1497	0	1583	1367	0	1844	1774	1863	1583	1774	1863	1576
Q Serve(g_s), s	2.6	0.0	0.4	1.7	0.0	0.4	2.9	12.0	0.0	0.4	13.6	0.8
Cycle Q Clear(g_c), s	3.0	0.0	0.4	4.7	0.0	0.4	2.9	12.0	0.0	0.4	13.6	0.8
Prop In Lane	0.79		1.00	1.00		0.06	1.00		1.00	1.00		1.00
Lane Grp Cap(c), veh/h	330	0	207	243	0	241	447	960	816	392	802	679
V/C Ratio(X)	0.31	0.00	0.07	0.20	0.00	0.07	0.47	0.66	0.00	0.07	0.77	0.06
Avail Cap(c_a), veh/h	907	0	828	779	0	964	820	1988	1689	916	1988	1682
HCM Platoon Ratio	1.00	1.00	1.00	1.00	1.00	1.00	1.00	1.00	1.00	1.00	1.00	1.00
Upstream Filter(I)	1.00	0.00	1.00	1.00	0.00	1.00	1.00	1.00	0.00	1.00	1.00	1.00
Uniform Delay (d), s/veh	19.3	0.0	18.2	21.6	0.0	18.2	8.4	8.5	0.0	8.0	11.6	8.0
Incr Delay (d2), s/veh	0.5	0.0	0.1	0.4	0.0	0.1	0.8	0.8	0.0	0.1	1.6	0.0
Initial Q Delay(d3),s/veh	0.0	0.0	0.0	0.0	0.0	0.0	0.0	0.0	0.0	0.0	0.0	0.0
%ile BackOfQ(50%),veh/ln	1.3	0.0	0.2	0.7	0.0	0.2	1.5	6.2	0.0	0.2	7.3	0.3
LnGrp Delay(d),s/veh	19.9	0.0	18.4	22.0	0.0	18.3	9.2	9.3	0.0	8.1	13.2	8.0
LnGrp LOS	B		B	C		B	A	A		A	B	A
Approach Vol, veh/h		118			66			848			691	
Approach Delay, s/veh		19.7			21.0			9.3			12.7	
Approach LOS		B			C			A			B	

Timer	1	2	3	4	5	6	7	8
Assigned Phs	1	2		4	5	6		8
Phs Duration (G+Y+Rc), s	5.9	30.6		11.2	10.0	26.6		11.2
Change Period (Y+Rc), s	5.0	6.0		5.0	5.0	6.0		5.0
Max Green Setting (Gmax), s	15.0	51.0		25.0	15.0	51.0		25.0
Max Q Clear Time (g_c+I1), s	2.4	14.0		5.0	4.9	15.6		6.7
Green Ext Time (p_c), s	0.0	4.7		0.5	0.4	4.7		0.2

Intersection Summary	
HCM 2010 Ctrl Delay	11.8
HCM 2010 LOS	B

Movement	EBL	EBT	EBR	WBL	WBT	WBR	NBL	NBT	NBR	SBL	SBT	SBR
Lane Configurations												
Traffic Volume (veh/h)	60	5	95	10	5	10	165	815	10	5	765	75
Future Volume (veh/h)	60	5	95	10	5	10	165	815	10	5	765	75
Number	7	4	14	3	8	18	5	2	12	1	6	16
Initial Q (Qb), veh	0	0	0	0	0	0	0	0	0	0	0	0
Ped-Bike Adj(A_pbT)	1.00		0.97	1.00		0.97	1.00		1.00	1.00		1.00
Parking Bus, Adj	1.00	1.00	1.00	1.00	1.00	1.00	1.00	1.00	1.00	1.00	1.00	1.00
Adj Sat Flow, veh/h/ln	1863	1863	1900	1863	1863	1863	1863	1863	1863	1863	1863	1863
Adj Flow Rate, veh/h	65	5	4	11	5	1	179	886	8	5	832	44
Adj No. of Lanes	1	1	0	1	1	1	1	1	1	1	1	1
Peak Hour Factor	0.92	0.92	0.92	0.92	0.92	0.92	0.92	0.92	0.92	0.92	0.92	0.92
Percent Heavy Veh, %	2	2	2	2	2	2	2	2	2	2	2	2
Cap, veh/h	85	113	91	19	154	127	221	1168	993	7	943	800
Arrive On Green	0.05	0.12	0.12	0.01	0.08	0.08	0.12	0.63	0.63	0.00	0.51	0.51
Sat Flow, veh/h	1774	946	757	1774	1863	1537	1774	1863	1583	1774	1863	1580
Grp Volume(v), veh/h	65	0	9	11	5	1	179	886	8	5	832	44
Grp Sat Flow(s),veh/h/ln	1774	0	1702	1774	1863	1537	1774	1863	1583	1774	1863	1580
Q Serve(g_s), s	3.0	0.0	0.4	0.5	0.2	0.1	8.2	28.4	0.2	0.2	33.5	1.2
Cycle Q Clear(g_c), s	3.0	0.0	0.4	0.5	0.2	0.1	8.2	28.4	0.2	0.2	33.5	1.2
Prop In Lane	1.00		0.44	1.00		1.00	1.00		1.00	1.00		1.00
Lane Grp Cap(c), veh/h	85	0	204	19	154	127	221	1168	993	7	943	800
V/C Ratio(X)	0.77	0.00	0.04	0.58	0.03	0.01	0.81	0.76	0.01	0.72	0.88	0.05
Avail Cap(c_a), veh/h	423	0	426	423	466	384	528	1442	1226	528	1442	1223
HCM Platoon Ratio	1.00	1.00	1.00	1.00	1.00	1.00	1.00	1.00	1.00	1.00	1.00	1.00
Upstream Filter(I)	1.00	0.00	1.00	1.00	1.00	1.00	1.00	1.00	1.00	1.00	1.00	1.00
Uniform Delay (d), s/veh	39.5	0.0	32.7	41.3	35.4	35.3	35.8	11.1	5.9	41.8	18.5	10.5
Incr Delay (d2), s/veh	13.4	0.0	0.1	24.4	0.1	0.0	6.9	1.9	0.0	84.7	4.4	0.0
Initial Q Delay(d3),s/veh	0.0	0.0	0.0	0.0	0.0	0.0	0.0	0.0	0.0	0.0	0.0	0.0
%ile BackOfQ(50%),veh/ln	1.8	0.0	0.2	0.4	0.1	0.0	4.5	14.9	0.1	0.3	18.3	0.5
LnGrp Delay(d),s/veh	52.9	0.0	32.8	65.8	35.5	35.4	42.6	13.0	5.9	126.5	22.9	10.6
LnGrp LOS	D		C	E	D	D	D	B	A	F	C	B
Approach Vol, veh/h		74			17			1073			881	
Approach Delay, s/veh		50.4			55.1			17.9			22.9	
Approach LOS		D			E			B			C	

Timer	1	2	3	4	5	6	7	8
Assigned Phs	1	2	3	4	5	6	7	8
Phs Duration (G+Y+Rc), s	5.3	57.7	5.9	15.1	15.5	47.5	9.0	12.0
Change Period (Y+Rc), s	5.0	5.0	5.0	5.0	5.0	5.0	5.0	5.0
Max Green Setting (Gmax), s	25.0	65.0	20.0	21.0	25.0	65.0	20.0	21.0
Max Q Clear Time (g_c+I1), s	2.2	30.4	2.5	2.4	10.2	35.5	5.0	2.2
Green Ext Time (p_c), s	0.0	8.0	0.0	0.0	0.4	7.1	0.1	0.0

Intersection Summary	
HCM 2010 Ctrl Delay	21.5
HCM 2010 LOS	C

Movement	EBL	EBT	EBR	WBL	WBT	WBR	NBL	NBT	NBR	SBL	SBT	SBR
Lane Configurations												
Traffic Volume (veh/h)	75	5	600	80	10	10	605	880	10	5	810	20
Future Volume (veh/h)	75	5	600	80	10	10	605	880	10	5	810	20
Number	3	8	18	7	4	14	1	6	16	5	2	12
Initial Q (Qb), veh	0	0	0	0	0	0	0	0	0	0	0	0
Ped-Bike Adj(A_pbT)	1.00		1.00	1.00		1.00	1.00		1.00	1.00		1.00
Parking Bus, Adj	1.00	1.00	1.00	1.00	1.00	1.00	1.00	1.00	1.00	1.00	1.00	1.00
Adj Sat Flow, veh/h/ln	1900	1863	1863	1900	1863	1900	1863	1863	1900	1863	1863	1863
Adj Flow Rate, veh/h	82	5	0	87	11	9	658	957	11	5	880	6
Adj No. of Lanes	0	1	1	0	1	0	1	2	0	1	2	1
Peak Hour Factor	0.92	0.92	0.92	0.92	0.92	0.92	0.92	0.92	0.92	0.92	0.92	0.92
Percent Heavy Veh, %	2	2	2	2	2	2	2	2	2	2	2	2
Cap, veh/h	203	8	139	186	15	12	702	2681	31	7	1260	564
Arrive On Green	0.10	0.09	0.00	0.10	0.09	0.09	0.40	0.75	0.75	0.00	0.36	0.36
Sat Flow, veh/h	1461	89	1583	1320	167	137	1774	3584	41	1774	3539	1583
Grp Volume(v), veh/h	87	0	0	107	0	0	658	473	495	5	880	6
Grp Sat Flow(s),veh/h/ln	1550	0	1583	1623	0	0	1774	1770	1855	1774	1770	1583
Q Serve(g_s), s	0.0	0.0	0.0	0.8	0.0	0.0	33.4	8.6	8.6	0.3	20.0	0.2
Cycle Q Clear(g_c), s	4.7	0.0	0.0	5.5	0.0	0.0	33.4	8.6	8.6	0.3	20.0	0.2
Prop In Lane	0.94		1.00	0.81		0.08	1.00		0.02	1.00		1.00
Lane Grp Cap(c), veh/h	228	0	139	230	0	0	702	1324	1388	7	1260	564
V/C Ratio(X)	0.38	0.00	0.00	0.47	0.00	0.00	0.94	0.36	0.36	0.72	0.70	0.01
Avail Cap(c_a), veh/h	404	0	338	490	0	0	1345	1324	1388	1345	2607	1166
HCM Platoon Ratio	1.00	1.00	1.00	1.00	1.00	1.00	1.00	1.00	1.00	1.00	1.00	1.00
Upstream Filter(I)	1.00	0.00	0.00	1.00	0.00	0.00	1.00	1.00	1.00	1.00	1.00	1.00
Uniform Delay (d), s/veh	40.7	0.0	0.0	41.0	0.0	0.0	27.2	4.1	4.1	46.6	25.8	19.5
Incr Delay (d2), s/veh	1.1	0.0	0.0	1.5	0.0	0.0	2.8	0.3	0.3	40.7	1.5	0.0
Initial Q Delay(d3),s/veh	0.0	0.0	0.0	0.0	0.0	0.0	0.0	0.0	0.0	0.0	0.0	0.0
%ile BackOfQ(50%),veh/ln	2.2	0.0	0.0	2.7	0.0	0.0	16.8	4.2	4.4	0.2	10.0	0.1
LnGrp Delay(d),s/veh	41.7	0.0	0.0	42.5	0.0	0.0	30.0	4.4	4.4	87.3	27.4	19.5
LnGrp LOS	D			D			C	A	A	F	C	B
Approach Vol, veh/h		87			107			1626			891	
Approach Delay, s/veh		41.7			42.5			14.8			27.6	
Approach LOS		D			D			B			C	

Timer	1	2	3	4	5	6	7	8
Assigned Phs	1	2		4	5	6		8
Phs Duration (G+Y+Rc), s	41.1	39.4		13.2	4.4	76.1		13.2
Change Period (Y+Rc), s	4.0	6.0		5.0	4.0	6.0		5.0
Max Green Setting (Gmax), s	71.0	69.0		25.0	71.0	69.0		20.0
Max Q Clear Time (g_c+I1), s	35.4	22.0		7.5	2.3	10.6		6.7
Green Ext Time (p_c), s	1.7	11.4		0.3	0.0	12.2		0.2

Intersection Summary	
HCM 2010 Ctrl Delay	20.9
HCM 2010 LOS	C

Movement	EBL	EBT	EBR	WBL	WBT	WBR	NBL	NBT	NBR	SBL	SBT	SBR
Lane Configurations												
Traffic Volume (veh/h)	50	5	140	15	0	5	135	1435	10	10	1485	60
Future Volume (veh/h)	50	5	140	15	0	5	135	1435	10	10	1485	60
Number	3	8	18	7	4	14	1	6	16	5	2	12
Initial Q (Qb), veh	0	0	0	0	0	0	0	0	0	0	0	0
Ped-Bike Adj(A_pbT)	0.97		0.96	0.97		0.96	1.00		1.00	1.00		1.00
Parking Bus, Adj	1.00	1.00	1.00	1.00	1.00	1.00	1.00	1.00	1.00	1.00	1.00	1.00
Adj Sat Flow, veh/h/ln	1900	1863	1863	1900	1863	1900	1863	1863	1900	1863	1863	1863
Adj Flow Rate, veh/h	54	5	6	16	0	1	147	1560	11	11	1614	38
Adj No. of Lanes	0	1	1	0	1	0	1	2	0	1	2	1
Peak Hour Factor	0.92	0.92	0.92	0.92	0.92	0.92	0.92	0.92	0.92	0.92	0.92	0.92
Percent Heavy Veh, %	2	2	2	2	2	2	2	2	2	2	2	2
Cap, veh/h	230	18	174	187	2	7	180	2613	18	14	2236	1000
Arrive On Green	0.13	0.11	0.11	0.13	0.00	0.11	0.10	0.73	0.73	0.01	0.63	0.63
Sat Flow, veh/h	1353	155	1521	968	19	62	1774	3602	25	1774	3539	1583
Grp Volume(v), veh/h	59	0	6	17	0	0	147	766	805	11	1614	38
Grp Sat Flow(s),veh/h/ln	1509	0	1521	1049	0	0	1774	1770	1858	1774	1770	1583
Q Serve(g_s), s	0.0	0.0	0.3	0.9	0.0	0.0	7.5	19.3	19.3	0.6	28.4	0.8
Cycle Q Clear(g_c), s	2.8	0.0	0.3	3.7	0.0	0.0	7.5	19.3	19.3	0.6	28.4	0.8
Prop In Lane	0.92		1.00	0.94		0.06	1.00		0.01	1.00		1.00
Lane Grp Cap(c), veh/h	264	0	174	207	0	0	180	1283	1348	14	2236	1000
V/C Ratio(X)	0.22	0.00	0.03	0.08	0.00	0.00	0.82	0.60	0.60	0.78	0.72	0.04
Avail Cap(c_a), veh/h	454	0	381	393	0	0	406	1657	1740	212	2929	1310
HCM Platoon Ratio	1.00	1.00	1.00	1.00	1.00	1.00	1.00	1.00	1.00	1.00	1.00	1.00
Upstream Filter(I)	1.00	0.00	1.00	1.00	0.00	0.00	1.00	1.00	1.00	1.00	1.00	1.00
Uniform Delay (d), s/veh	36.8	0.0	36.2	38.0	0.0	0.0	40.4	6.1	6.1	45.5	11.4	6.4
Incr Delay (d2), s/veh	0.2	0.0	0.0	0.1	0.0	0.0	3.4	1.0	0.9	27.6	1.1	0.0
Initial Q Delay(d3),s/veh	0.0	0.0	0.0	0.0	0.0	0.0	0.0	0.0	0.0	0.0	0.0	0.0
%ile BackOfQ(50%),veh/ln	1.4	0.0	0.1	0.4	0.0	0.0	3.8	9.5	10.0	0.4	14.0	0.4
LnGrp Delay(d),s/veh	37.0	0.0	36.2	38.1	0.0	0.0	43.8	7.1	7.0	73.1	12.5	6.4
LnGrp LOS	D		D	D			D	A	A	E	B	A
Approach Vol, veh/h		65			17			1718			1663	
Approach Delay, s/veh		36.9			38.1			10.2			12.8	
Approach LOS		D			D			B			B	

Timer	1	2	3	4	5	6	7	8
Assigned Phs	1	2		4	5	6		8
Phs Duration (G+Y+Rc), s	13.3	63.0		15.5	4.7	71.6		15.5
Change Period (Y+Rc), s	4.0	5.0		5.0	4.0	5.0		5.0
Max Green Setting (Gmax), s	21.0	76.0		23.0	11.0	86.0		23.0
Max Q Clear Time (g_c+I1), s	9.5	30.4		5.7	2.6	21.3		4.8
Green Ext Time (p_c), s	0.1	27.7		0.0	0.0	29.8		0.1

Intersection Summary	
HCM 2010 Ctrl Delay	12.1
HCM 2010 LOS	B

Movement	EBL	EBT	EBR	WBL	WBT	WBR	NBL	NBT	NBR	SBL	SBT	SBR
Lane Configurations												
Traffic Volume (veh/h)	75	5	175	70	5	45	125	1425	60	35	1645	95
Future Volume (veh/h)	75	5	175	70	5	45	125	1425	60	35	1645	95
Number	3	8	18	7	4	14	1	6	16	5	2	12
Initial Q (Qb), veh	0	0	0	0	0	0	0	0	0	0	0	0
Ped-Bike Adj(A_pbT)	0.99		0.99	0.99		0.99	1.00		1.00	1.00		1.00
Parking Bus, Adj	1.00	1.00	1.00	1.00	1.00	1.00	1.00	1.00	1.00	1.00	1.00	1.00
Adj Sat Flow, veh/h/ln	1900	1863	1863	1863	1863	1900	1863	1863	1863	1863	1863	1863
Adj Flow Rate, veh/h	82	5	27	76	5	1	136	1549	49	38	1788	81
Adj No. of Lanes	0	1	1	1	1	0	1	2	1	1	2	1
Peak Hour Factor	0.92	0.92	0.92	0.92	0.92	0.92	0.92	0.92	0.92	0.92	0.92	0.92
Percent Heavy Veh, %	2	2	2	2	2	2	2	2	2	2	2	2
Cap, veh/h	212	12	205	142	197	39	157	2656	1187	49	2440	1091
Arrive On Green	0.14	0.13	0.13	0.13	0.13	0.13	0.09	0.75	0.75	0.03	0.69	0.69
Sat Flow, veh/h	1298	89	1562	1358	1504	301	1774	3539	1582	1774	3539	1583
Grp Volume(v), veh/h	87	0	27	76	0	6	136	1549	49	38	1788	81
Grp Sat Flow(s),veh/h/ln	1387	0	1562	1358	0	1805	1774	1770	1582	1774	1770	1583
Q Serve(g_s), s	9.2	0.0	2.5	9.1	0.0	0.5	12.5	32.1	1.3	3.5	52.3	2.8
Cycle Q Clear(g_c), s	9.7	0.0	2.5	18.8	0.0	0.5	12.5	32.1	1.3	3.5	52.3	2.8
Prop In Lane	0.94		1.00	1.00		0.17	1.00		1.00	1.00		1.00
Lane Grp Cap(c), veh/h	233	0	205	142	0	237	157	2656	1187	49	2440	1091
V/C Ratio(X)	0.37	0.00	0.13	0.54	0.00	0.03	0.86	0.58	0.04	0.78	0.73	0.07
Avail Cap(c_a), veh/h	253	0	227	161	0	263	280	2656	1187	108	2440	1091
HCM Platoon Ratio	1.00	1.00	1.00	1.00	1.00	1.00	1.00	1.00	1.00	1.00	1.00	1.00
Upstream Filter(I)	1.00	0.00	1.00	1.00	0.00	1.00	0.71	0.71	0.71	1.00	1.00	1.00
Uniform Delay (d), s/veh	66.2	0.0	63.4	75.2	0.0	62.5	74.2	9.1	5.3	79.7	16.1	8.4
Incr Delay (d2), s/veh	1.0	0.0	0.3	3.1	0.0	0.0	3.9	0.7	0.0	9.3	2.0	0.1
Initial Q Delay(d3),s/veh	0.0	0.0	0.0	0.0	0.0	0.0	0.0	0.0	0.0	0.0	0.0	0.0
%ile BackOfQ(50%),veh/ln	3.7	0.0	1.1	3.5	0.0	0.2	6.3	15.7	0.6	1.8	26.0	1.3
LnGrp Delay(d),s/veh	67.2	0.0	63.7	78.4	0.0	62.5	78.1	9.8	5.4	89.0	18.1	8.5
LnGrp LOS	E		E	E		E	E	A	A	F	B	A
Approach Vol, veh/h		114			82			1734			1907	
Approach Delay, s/veh		66.4			77.2			15.0			19.1	
Approach LOS		E			E			B			B	

Timer	1	2	3	4	5	6	7	8
Assigned Phs	1	2		4	5	6		8
Phs Duration (G+Y+Rc), s	18.6	119.7		26.6	8.6	129.8		26.6
Change Period (Y+Rc), s	4.0	6.0		5.0	4.0	6.0		5.0
Max Green Setting (Gmax), s	26.0	100.0		24.0	10.0	116.0		24.0
Max Q Clear Time (g_c+I1), s	14.5	54.3		20.8	5.5	34.1		11.7
Green Ext Time (p_c), s	0.2	32.1		0.1	0.0	34.5		0.3

Intersection Summary	
HCM 2010 Ctrl Delay	19.9
HCM 2010 LOS	B

Movement	EBL	EBT	EBR	WBL	WBT	WBR	NBL	NBT	NBR	SBL	SBT	SBR
Lane Configurations												
Traffic Volume (veh/h)	290	5	615	15	0	5	385	1470	10	75	1690	135
Future Volume (veh/h)	290	5	615	15	0	5	385	1470	10	75	1690	135
Number	3	8	18	7	4	14	1	6	16	5	2	12
Initial Q (Qb), veh	0	0	0	0	0	0	0	0	0	0	0	0
Ped-Bike Adj(A_pbT)	1.00		0.99	1.00		0.96	1.00		1.00	1.00		1.00
Parking Bus, Adj	1.00	1.00	1.00	1.00	1.00	1.00	1.00	1.00	1.00	1.00	1.00	1.00
Adj Sat Flow, veh/h/ln	1900	1863	1863	1900	1863	1900	1863	1863	1900	1863	1863	1863
Adj Flow Rate, veh/h	315	5	469	16	0	1	418	1598	11	82	1837	109
Adj No. of Lanes	0	1	2	0	1	0	2	2	0	1	2	1
Peak Hour Factor	0.92	0.92	0.92	0.92	0.92	0.92	0.92	0.92	0.92	0.92	0.92	0.92
Percent Heavy Veh, %	2	2	2	2	2	2	2	2	2	2	2	2
Cap, veh/h	272	4	812	69	0	4	489	2398	16	113	2078	930
Arrive On Green	0.16	0.16	0.15	0.04	0.00	0.03	0.14	0.67	0.66	0.06	0.59	0.59
Sat Flow, veh/h	1748	28	2750	1653	0	103	3442	3603	25	1774	3539	1583
Grp Volume(v), veh/h	320	0	469	17	0	0	418	784	825	82	1837	109
Grp Sat Flow(s),veh/h/ln	1775	0	1375	1756	0	0	1721	1770	1858	1774	1770	1583
Q Serve(g_s), s	34.0	0.0	31.7	2.0	0.0	0.0	25.9	58.1	58.3	9.9	97.3	6.7
Cycle Q Clear(g_c), s	34.0	0.0	31.7	2.0	0.0	0.0	25.9	58.1	58.3	9.9	97.3	6.7
Prop In Lane	0.98		1.00	0.94		0.06	1.00		0.01	1.00		1.00
Lane Grp Cap(c), veh/h	276	0	812	73	0	0	489	1178	1237	113	2078	930
V/C Ratio(X)	1.16	0.00	0.58	0.23	0.00	0.00	0.85	0.67	0.67	0.73	0.88	0.12
Avail Cap(c_a), veh/h	276	0	812	249	0	0	914	1572	1651	122	2447	1095
HCM Platoon Ratio	1.00	1.00	1.00	1.00	1.00	1.00	1.00	1.00	1.00	1.00	1.00	1.00
Upstream Filter(I)	1.00	0.00	1.00	1.00	0.00	0.00	1.00	1.00	1.00	1.00	1.00	1.00
Uniform Delay (d), s/veh	92.2	0.0	65.7	101.3	0.0	0.0	91.5	21.9	22.0	100.3	38.7	20.0
Incr Delay (d2), s/veh	103.6	0.0	0.7	0.6	0.0	0.0	1.7	0.9	0.9	14.9	4.0	0.1
Initial Q Delay(d3),s/veh	0.0	0.0	0.0	0.0	0.0	0.0	0.0	0.0	0.0	0.0	0.0	0.0
%ile BackOfQ(50%),veh/ln	24.6	0.0	12.1	1.0	0.0	0.0	12.5	28.6	30.1	5.3	48.6	2.9
LnGrp Delay(d),s/veh	195.8	0.0	66.4	101.9	0.0	0.0	93.1	22.9	22.8	115.3	42.7	20.1
LnGrp LOS	F		E	F			F	C	C	F	D	C
Approach Vol, veh/h		789			17			2027			2028	
Approach Delay, s/veh		118.9			101.9			37.4			44.4	
Approach LOS		F			F			D			D	

Timer	1	2	3	4	5	6	7	8
Assigned Phs	1	2		4	5	6		8
Phs Duration (G+Y+Rc), s	35.0	132.2		13.1	17.9	149.3		38.0
Change Period (Y+Rc), s	6.0	6.0		7.0	6.0	6.0		7.0
Max Green Setting (Gmax), s	56.0	149.0		28.0	13.0	192.0		31.0
Max Q Clear Time (g_c+I1), s	27.9	99.3		4.0	11.9	60.3		36.0
Green Ext Time (p_c), s	1.1	26.9		0.0	0.0	21.4		0.0

Intersection Summary	
HCM 2010 Ctrl Delay	53.8
HCM 2010 LOS	D

Notes

Movement	EBL	EBT	EBR	WBL	WBT	WBR	NBL	NBT	NBR	SBL	SBT	SBR
Lane Configurations												
Traffic Volume (veh/h)	10	0	5	90	5	60	10	1805	90	85	2250	5
Future Volume (veh/h)	10	0	5	90	5	60	10	1805	90	85	2250	5
Number	3	8	18	7	4	14	1	6	16	5	2	12
Initial Q (Qb), veh	0	0	0	0	0	0	0	0	0	0	0	0
Ped-Bike Adj(A_pbT)	1.00		1.00	1.00		1.00	1.00		1.00	1.00		1.00
Parking Bus, Adj	1.00	1.00	1.00	1.00	1.00	1.00	1.00	1.00	1.00	1.00	1.00	1.00
Adj Sat Flow, veh/h/ln	1900	1863	1900	1863	1863	1900	1863	1863	1900	1863	1863	1900
Adj Flow Rate, veh/h	11	0	1	98	5	3	11	1962	96	92	2446	5
Adj No. of Lanes	0	1	0	1	1	0	1	2	0	1	2	0
Peak Hour Factor	0.92	0.92	0.92	0.92	0.92	0.92	0.92	0.92	0.92	0.92	0.92	0.92
Percent Heavy Veh, %	2	2	2	2	2	2	2	2	2	2	2	2
Cap, veh/h	160	2	10	182	96	58	22	2599	126	118	2936	6
Arrive On Green	0.09	0.00	0.08	0.09	0.09	0.08	0.03	1.00	1.00	0.07	0.81	0.80
Sat Flow, veh/h	1235	26	115	1410	1092	655	1774	3436	167	1774	3624	7
Grp Volume(v), veh/h	12	0	0	98	0	8	11	1003	1055	92	1194	1257
Grp Sat Flow(s),veh/h/ln	1376	0	0	1410	0	1747	1774	1770	1833	1774	1770	1861
Q Serve(g_s), s	0.8	0.0	0.0	7.4	0.0	0.6	0.8	0.0	0.0	6.9	53.1	53.2
Cycle Q Clear(g_c), s	1.4	0.0	0.0	8.8	0.0	0.6	0.8	0.0	0.0	6.9	53.1	53.2
Prop In Lane	0.92		0.08	1.00		0.38	1.00		0.09	1.00		0.00
Lane Grp Cap(c), veh/h	173	0	0	182	0	154	22	1338	1386	118	1434	1508
V/C Ratio(X)	0.07	0.00	0.00	0.54	0.00	0.05	0.50	0.75	0.76	0.78	0.83	0.83
Avail Cap(c_a), veh/h	299	0	0	308	0	311	145	1338	1386	250	1434	1508
HCM Platoon Ratio	1.00	1.00	1.00	1.00	1.00	1.00	2.00	2.00	2.00	1.00	1.00	1.00
Upstream Filter(I)	1.00	0.00	0.00	1.00	0.00	1.00	0.60	0.60	0.60	1.00	1.00	1.00
Uniform Delay (d), s/veh	56.9	0.0	0.0	60.0	0.0	56.5	65.4	0.0	0.0	62.0	7.5	7.5
Incr Delay (d2), s/veh	0.2	0.0	0.0	2.5	0.0	0.1	3.8	2.4	2.4	4.1	5.8	5.6
Initial Q Delay(d3),s/veh	0.0	0.0	0.0	0.0	0.0	0.0	0.0	0.0	0.0	0.0	0.0	0.0
%ile BackOfQ(50%),veh/ln	0.4	0.0	0.0	3.7	0.0	0.3	0.4	0.9	0.9	3.5	27.5	29.2
LnGrp Delay(d),s/veh	57.0	0.0	0.0	62.5	0.0	56.7	69.1	2.4	2.4	66.2	13.3	13.0
LnGrp LOS	E			E		E	E	A	A	E	B	B
Approach Vol, veh/h		12			106			2069			2543	
Approach Delay, s/veh		57.0			62.0			2.7			15.1	
Approach LOS		E			E			A			B	

Timer	1	2	3	4	5	6	7	8
Assigned Phs	1	2		4	5	6		8
Phs Duration (G+Y+Rc), s	5.7	113.4		15.9	13.0	106.1		15.9
Change Period (Y+Rc), s	4.0	5.0		5.0	4.0	5.0		5.0
Max Green Setting (Gmax), s	11.0	87.0		23.0	19.0	79.0		23.0
Max Q Clear Time (g_c+I1), s	2.8	55.2		10.8	8.9	2.0		3.4
Green Ext Time (p_c), s	0.0	30.1		0.2	0.1	54.6		0.0

Intersection Summary	
HCM 2010 Ctrl Delay	10.8
HCM 2010 LOS	B

Movement	EBL	EBT	EBR	WBL	WBT	WBR	NBL	NBT	NBR	SBL	SBT	SBR
Lane Configurations												
Traffic Volume (veh/h)	175	15	10	60	5	10	5	1730	20	5	1910	325
Future Volume (veh/h)	175	15	10	60	5	10	5	1730	20	5	1910	325
Number	3	8	18	7	4	14	1	6	16	5	2	12
Initial Q (Qb), veh	0	0	0	0	0	0	0	0	0	0	0	0
Ped-Bike Adj(A_pbT)	1.00		1.00	1.00		1.00	1.00		1.00	1.00		1.00
Parking Bus, Adj	1.00	1.00	1.00	1.00	1.00	1.00	1.00	1.00	1.00	1.00	1.00	1.00
Adj Sat Flow, veh/h/ln	1900	1863	1900	1900	1863	1900	1863	1863	1900	1863	1863	1863
Adj Flow Rate, veh/h	190	16	9	65	5	7	5	1880	21	5	2076	278
Adj No. of Lanes	0	1	0	0	1	0	1	2	0	1	2	1
Peak Hour Factor	0.92	0.92	0.92	0.92	0.92	0.92	0.92	0.92	0.92	0.92	0.92	0.92
Percent Heavy Veh, %	2	2	2	2	2	2	2	2	2	2	2	2
Cap, veh/h	268	18	10	273	22	25	7	2662	30	7	2627	1175
Arrive On Green	0.16	0.16	0.16	0.16	0.16	0.16	0.01	1.00	1.00	0.00	0.74	0.74
Sat Flow, veh/h	1321	111	63	1358	132	149	1774	3585	40	1774	3539	1583
Grp Volume(v), veh/h	215	0	0	77	0	0	5	926	975	5	2076	278
Grp Sat Flow(s),veh/h/ln	1495	0	0	1639	0	0	1774	1770	1856	1774	1770	1583
Q Serve(g_s), s	13.4	0.0	0.0	0.0	0.0	0.0	0.4	0.0	0.0	0.4	49.3	7.4
Cycle Q Clear(g_c), s	18.8	0.0	0.0	5.4	0.0	0.0	0.4	0.0	0.0	0.4	49.3	7.4
Prop In Lane	0.88		0.04	0.84		0.09	1.00		0.02	1.00		1.00
Lane Grp Cap(c), veh/h	297	0	0	319	0	0	7	1314	1378	7	2627	1175
V/C Ratio(X)	0.72	0.00	0.00	0.24	0.00	0.00	0.74	0.71	0.71	0.74	0.79	0.24
Avail Cap(c_a), veh/h	379	0	0	401	0	0	105	1314	1378	105	2627	1175
HCM Platoon Ratio	1.00	1.00	1.00	1.00	1.00	1.00	2.00	2.00	2.00	1.00	1.00	1.00
Upstream Filter(I)	1.00	0.00	0.00	1.00	0.00	0.00	0.60	0.60	0.60	0.39	0.39	0.39
Uniform Delay (d), s/veh	54.6	0.0	0.0	49.4	0.0	0.0	66.9	0.0	0.0	67.2	10.8	5.4
Incr Delay (d2), s/veh	4.9	0.0	0.0	0.4	0.0	0.0	29.4	1.9	1.9	20.3	1.0	0.2
Initial Q Delay(d3),s/veh	0.0	0.0	0.0	0.0	0.0	0.0	0.0	0.0	0.0	0.0	0.0	0.0
%ile BackOfQ(50%),veh/ln	8.2	0.0	0.0	2.6	0.0	0.0	0.2	0.7	0.7	0.2	24.0	3.2
LnGrp Delay(d),s/veh	59.5	0.0	0.0	49.7	0.0	0.0	96.3	1.9	1.9	87.4	11.8	5.6
LnGrp LOS	E			D			F	A	A	F	B	A
Approach Vol, veh/h		215			77			1906			2359	
Approach Delay, s/veh		59.5			49.7			2.1			11.3	
Approach LOS		E			D			A			B	

Timer	1	2	3	4	5	6	7	8
Assigned Phs	1	2		4	5	6		8
Phs Duration (G+Y+Rc), s	4.5	104.2		26.3	4.5	104.2		26.3
Change Period (Y+Rc), s	4.0	5.0		5.0	4.0	5.0		5.0
Max Green Setting (Gmax), s	8.0	84.0		29.0	8.0	84.0		29.0
Max Q Clear Time (g_c+I1), s	2.4	51.3		7.4	2.4	2.0		20.8
Green Ext Time (p_c), s	0.0	30.9		0.2	0.0	62.7		0.5

Intersection Summary	
HCM 2010 Ctrl Delay	10.4
HCM 2010 LOS	B

Movement	EBL	EBT	EBR	WBL	WBT	WBR	NBL	NBT	NBR	SBL	SBT	SBR
Lane Configurations												
Traffic Volume (veh/h)	180	35	45	95	25	20	55	1535	105	25	1845	150
Future Volume (veh/h)	180	35	45	95	25	20	55	1535	105	25	1845	150
Number	3	8	18	7	4	14	1	6	16	5	2	12
Initial Q (Qb), veh	0	0	0	0	0	0	0	0	0	0	0	0
Ped-Bike Adj(A_pbT)	0.98		0.98	0.99		0.97	1.00		1.00	1.00		1.00
Parking Bus, Adj	1.00	1.00	1.00	1.00	1.00	1.00	1.00	1.00	1.00	1.00	1.00	1.00
Adj Sat Flow, veh/h/ln	1900	1863	1863	1863	1863	1900	1863	1863	1900	1863	1863	1900
Adj Flow Rate, veh/h	196	38	8	103	27	2	60	1668	111	27	2005	159
Adj No. of Lanes	0	1	1	1	1	0	1	2	0	1	2	0
Peak Hour Factor	0.92	0.92	0.92	0.92	0.92	0.92	0.92	0.92	0.92	0.92	0.92	0.92
Percent Heavy Veh, %	2	2	2	2	2	2	2	2	2	2	2	2
Cap, veh/h	268	43	307	355	340	25	76	2336	154	34	2225	174
Arrive On Green	0.20	0.20	0.20	0.20	0.20	0.19	0.09	1.00	1.00	0.04	1.00	1.00
Sat Flow, veh/h	1103	214	1545	1347	1710	127	1774	3370	223	1774	3325	260
Grp Volume(v), veh/h	234	0	8	103	0	29	60	870	909	27	1054	1110
Grp Sat Flow(s),veh/h/ln	1317	0	1545	1347	0	1837	1774	1770	1823	1774	1770	1816
Q Serve(g_s), s	21.9	0.0	0.6	0.0	0.0	1.7	4.5	0.0	0.0	2.0	0.0	0.0
Cycle Q Clear(g_c), s	23.6	0.0	0.6	7.7	0.0	1.7	4.5	0.0	0.0	2.0	0.0	0.0
Prop In Lane	0.84		1.00	1.00		0.07	1.00		0.12	1.00		0.14
Lane Grp Cap(c), veh/h	311	0	307	355	0	365	76	1227	1264	34	1184	1215
V/C Ratio(X)	0.75	0.00	0.03	0.29	0.00	0.08	0.79	0.71	0.72	0.80	0.89	0.91
Avail Cap(c_a), veh/h	333	0	332	377	0	395	105	1227	1264	105	1184	1215
HCM Platoon Ratio	1.00	1.00	1.00	1.00	1.00	1.00	2.00	2.00	2.00	2.00	2.00	2.00
Upstream Filter(I)	1.00	0.00	1.00	1.00	0.00	1.00	0.38	0.38	0.38	0.50	0.50	0.50
Uniform Delay (d), s/veh	53.6	0.0	43.5	46.4	0.0	44.0	61.1	0.0	0.0	64.7	0.0	0.0
Incr Delay (d2), s/veh	8.7	0.0	0.0	0.4	0.0	0.1	6.5	1.3	1.4	7.7	5.5	6.6
Initial Q Delay(d3),s/veh	0.0	0.0	0.0	0.0	0.0	0.0	0.0	0.0	0.0	0.0	0.0	0.0
%ile BackOfQ(50%),veh/ln	9.3	0.0	0.2	3.3	0.0	0.9	2.3	0.5	0.5	1.1	1.8	2.2
LnGrp Delay(d),s/veh	62.3	0.0	43.6	46.9	0.0	44.1	67.6	1.3	1.4	72.4	5.5	6.6
LnGrp LOS	E		D	D		D	E	A	A	E	A	A
Approach Vol, veh/h		242			132			1839			2191	
Approach Delay, s/veh		61.7			46.3			3.5			6.9	
Approach LOS		E			D			A			A	

Timer	1	2	3	4	5	6	7	8
Assigned Phs	1	2		4	5	6		8
Phs Duration (G+Y+Rc), s	9.8	94.3		30.9	6.6	97.6		30.9
Change Period (Y+Rc), s	4.0	5.0		5.0	4.0	5.0		5.0
Max Green Setting (Gmax), s	8.0	85.0		28.0	8.0	85.0		28.0
Max Q Clear Time (g_c+I1), s	6.5	2.0		9.7	4.0	2.0		25.6
Green Ext Time (p_c), s	0.0	62.6		0.4	0.0	43.1		0.2

Intersection Summary	
HCM 2010 Ctrl Delay	9.7
HCM 2010 LOS	A

Notes

Movement	EBL	EBT	EBR	WBL	WBT	WBR	NBL	NBT	NBR	SBL	SBT	SBR
Lane Configurations												
Traffic Volume (veh/h)	60	185	60	125	110	695	55	940	195	630	1225	65
Future Volume (veh/h)	60	185	60	125	110	695	55	940	195	630	1225	65
Number	7	4	14	3	8	18	1	6	16	5	2	12
Initial Q (Qb), veh	0	0	0	0	0	0	0	0	0	0	0	0
Ped-Bike Adj(A_pbT)	0.99		0.97	1.00		0.98	1.00		0.99	1.00		0.99
Parking Bus, Adj	1.00	1.00	1.00	1.00	1.00	1.00	1.00	1.00	1.00	1.00	1.00	1.00
Adj Sat Flow, veh/h/ln	1900	1863	1863	1863	1863	1863	1863	1863	1863	1863	1863	1900
Adj Flow Rate, veh/h	65	201	8	136	120	454	60	1022	128	685	1332	69
Adj No. of Lanes	0	1	1	1	1	1	1	2	1	2	2	0
Peak Hour Factor	0.92	0.92	0.92	0.92	0.92	0.92	0.92	0.92	0.92	0.92	0.92	0.92
Percent Heavy Veh, %	2	2	2	2	2	2	2	2	2	2	2	2
Cap, veh/h	97	239	317	234	589	492	77	1361	604	724	1887	98
Arrive On Green	0.21	0.21	0.21	0.08	0.32	0.32	0.04	0.38	0.38	0.42	1.00	1.00
Sat Flow, veh/h	310	1163	1542	1774	1863	1556	1774	3539	1571	3442	3423	177
Grp Volume(v), veh/h	266	0	8	136	120	454	60	1022	128	685	687	714
Grp Sat Flow(s),veh/h/ln	1473	0	1542	1774	1863	1556	1774	1770	1571	1721	1770	1830
Q Serve(g_s), s	20.4	0.0	0.6	7.8	6.4	38.0	4.5	33.7	7.4	25.9	0.0	0.0
Cycle Q Clear(g_c), s	23.5	0.0	0.6	7.8	6.4	38.0	4.5	33.7	7.4	25.9	0.0	0.0
Prop In Lane	0.24		1.00	1.00		1.00	1.00		1.00	1.00		0.10
Lane Grp Cap(c), veh/h	336	0	317	234	589	492	77	1361	604	724	976	1009
V/C Ratio(X)	0.79	0.00	0.03	0.58	0.20	0.92	0.78	0.75	0.21	0.95	0.70	0.71
Avail Cap(c_a), veh/h	339	0	320	301	662	553	237	1361	604	765	976	1009
HCM Platoon Ratio	1.00	1.00	1.00	1.00	1.00	1.00	1.00	1.00	1.00	2.00	2.00	2.00
Upstream Filter(I)	1.00	0.00	1.00	1.00	1.00	1.00	0.88	0.88	0.88	0.31	0.31	0.31
Uniform Delay (d), s/veh	51.6	0.0	42.8	38.4	33.7	44.6	63.9	36.0	27.8	38.4	0.0	0.0
Incr Delay (d2), s/veh	12.0	0.0	0.0	2.3	0.2	19.9	5.4	3.4	0.7	8.1	1.3	1.3
Initial Q Delay(d3),s/veh	0.0	0.0	0.0	0.0	0.0	0.0	0.0	0.0	0.0	0.0	0.0	0.0
%ile BackOfQ(50%),veh/ln	10.7	0.0	0.2	4.0	3.3	19.0	2.3	17.1	3.3	12.9	0.4	0.4
LnGrp Delay(d),s/veh	63.6	0.0	42.9	40.7	33.9	64.4	69.3	39.4	28.6	46.4	1.3	1.3
LnGrp LOS	E		D	D	C	E	E	D	C	D	A	A
Approach Vol, veh/h		274			710			1210			2086	
Approach Delay, s/veh		63.0			54.7			39.7			16.1	
Approach LOS		E			D			D			B	

Timer	1	2	3	4	5	6	7	8
Assigned Phs	1	2	3	4	5	6		8
Phs Duration (G+Y+Rc), s	9.9	78.4	15.0	31.7	32.4	55.9		46.7
Change Period (Y+Rc), s	4.0	5.0	5.0	5.0	4.0	5.0		5.0
Max Green Setting (Gmax), s	18.0	56.0	15.0	27.0	30.0	44.0		47.0
Max Q Clear Time (g_c+I1), s	6.5	2.0	9.8	25.5	27.9	35.7		40.0
Green Ext Time (p_c), s	0.1	22.6	0.2	0.2	0.6	5.6		1.7

Intersection Summary	
HCM 2010 Ctrl Delay	32.2
HCM 2010 LOS	C

Notes

APPENDIX C

LEVEL OF SERVICE CALCULATIONS

- Base Year 2022 WE Peak

Movement	EBL	EBT	EBR	WBL	WBT	WBR	NBL	NBT	NBR	SBL	SBT	SBR
Lane Configurations												
Traffic Volume (veh/h)	40	45	330	45	50	20	270	310	40	20	280	90
Future Volume (veh/h)	40	45	330	45	50	20	270	310	40	20	280	90
Number	7	4	14	3	8	18	5	2	12	1	6	16
Initial Q (Qb), veh	0	0	0	0	0	0	0	0	0	0	0	0
Ped-Bike Adj(A_pbT)	0.99		0.99	0.99		0.99	1.00		1.00	1.00		1.00
Parking Bus, Adj	1.00	1.00	1.00	1.00	1.00	1.00	1.00	1.00	1.00	1.00	1.00	1.00
Adj Sat Flow, veh/h/ln	1900	1863	1863	1863	1863	1900	1863	1863	1863	1863	1863	1863
Adj Flow Rate, veh/h	43	49	36	49	54	10	293	337	22	22	304	28
Adj No. of Lanes	0	1	1	1	1	0	1	1	1	1	1	1
Peak Hour Factor	0.92	0.92	0.92	0.92	0.92	0.92	0.92	0.92	0.92	0.92	0.92	0.92
Percent Heavy Veh, %	2	2	2	2	2	2	2	2	2	2	2	2
Cap, veh/h	193	136	204	268	199	37	380	905	767	29	536	455
Arrive On Green	0.13	0.13	0.13	0.13	0.13	0.13	0.21	0.49	0.49	0.02	0.29	0.29
Sat Flow, veh/h	552	1045	1566	1297	1527	283	1774	1863	1580	1774	1863	1581
Grp Volume(v), veh/h	92	0	36	49	0	64	293	337	22	22	304	28
Grp Sat Flow(s),veh/h/ln	1597	0	1566	1297	0	1809	1774	1863	1580	1774	1863	1581
Q Serve(g_s), s	0.8	0.0	0.9	1.6	0.0	1.4	6.8	4.9	0.3	0.5	6.0	0.6
Cycle Q Clear(g_c), s	2.2	0.0	0.9	3.8	0.0	1.4	6.8	4.9	0.3	0.5	6.0	0.6
Prop In Lane	0.47		1.00	1.00		0.16	1.00		1.00	1.00		1.00
Lane Grp Cap(c), veh/h	330	0	204	268	0	236	380	905	767	29	536	455
V/C Ratio(X)	0.28	0.00	0.18	0.18	0.00	0.27	0.77	0.37	0.03	0.77	0.57	0.06
Avail Cap(c_a), veh/h	988	0	864	814	0	998	1224	3383	2870	612	2741	2326
HCM Platoon Ratio	1.00	1.00	1.00	1.00	1.00	1.00	1.00	1.00	1.00	1.00	1.00	1.00
Upstream Filter(I)	1.00	0.00	1.00	1.00	0.00	1.00	1.00	1.00	1.00	1.00	1.00	1.00
Uniform Delay (d), s/veh	17.4	0.0	16.8	19.2	0.0	17.0	16.1	7.0	5.8	21.3	13.2	11.2
Incr Delay (d2), s/veh	0.5	0.0	0.4	0.3	0.0	0.6	3.4	0.5	0.0	34.3	2.0	0.1
Initial Q Delay(d3),s/veh	0.0	0.0	0.0	0.0	0.0	0.0	0.0	0.0	0.0	0.0	0.0	0.0
%ile BackOfQ(50%),veh/ln	1.1	0.0	0.4	0.6	0.0	0.7	3.6	2.7	0.1	0.5	3.3	0.3
LnGrp Delay(d),s/veh	17.8	0.0	17.2	19.5	0.0	17.7	19.5	7.6	5.9	55.6	15.2	11.4
LnGrp LOS	B		B	B		B	B	A	A	E	B	B
Approach Vol, veh/h		128			113			652			354	
Approach Delay, s/veh		17.7			18.5			12.9			17.4	
Approach LOS		B			B			B			B	

Timer	1	2	3	4	5	6	7	8
Assigned Phs	1	2		4	5	6		8
Phs Duration (G+Y+Rc), s	5.7	27.1		10.7	14.3	18.5		10.7
Change Period (Y+Rc), s	5.0	6.0		5.0	5.0	6.0		5.0
Max Green Setting (Gmax), s	15.0	79.0		24.0	30.0	64.0		24.0
Max Q Clear Time (g_c+I1), s	2.5	6.9		4.2	8.8	8.0		5.8
Green Ext Time (p_c), s	0.0	4.8		0.5	0.8	4.2		0.4

Intersection Summary	
HCM 2010 Ctrl Delay	15.1
HCM 2010 LOS	B

Movement	EBL	EBT	EBR	WBL	WBT	WBR	NBL	NBT	NBR	SBL	SBT	SBR
Lane Configurations												
Traffic Volume (veh/h)	55	20	195	40	15	5	135	445	25	15	485	60
Future Volume (veh/h)	55	20	195	40	15	5	135	445	25	15	485	60
Number	7	4	14	3	8	18	5	2	12	1	6	16
Initial Q (Qb), veh	0	0	0	0	0	0	0	0	0	0	0	0
Ped-Bike Adj(A_pbT)	0.98		0.98	0.99		0.98	1.00		1.00	1.00		1.00
Parking Bus, Adj	1.00	1.00	1.00	1.00	1.00	1.00	1.00	1.00	1.00	1.00	1.00	1.00
Adj Sat Flow, veh/h/ln	1900	1863	1863	1863	1863	1900	1863	1863	1863	1863	1863	1863
Adj Flow Rate, veh/h	60	22	23	43	16	1	147	484	0	16	527	25
Adj No. of Lanes	0	1	1	1	1	0	1	1	1	1	1	1
Peak Hour Factor	0.92	0.92	0.92	0.92	0.92	0.92	0.92	0.92	0.92	0.92	0.92	0.92
Percent Heavy Veh, %	2	2	2	2	2	2	2	2	2	2	2	2
Cap, veh/h	291	84	232	310	259	16	443	854	726	436	721	611
Arrive On Green	0.15	0.15	0.15	0.15	0.15	0.15	0.08	0.46	0.00	0.01	0.39	0.39
Sat Flow, veh/h	954	564	1557	1337	1733	108	1774	1863	1583	1774	1863	1577
Grp Volume(v), veh/h	82	0	23	43	0	17	147	484	0	16	527	25
Grp Sat Flow(s),veh/h/ln	1518	0	1557	1337	0	1841	1774	1863	1583	1774	1863	1577
Q Serve(g_s), s	1.2	0.0	0.5	1.3	0.0	0.3	2.0	8.0	0.0	0.2	10.2	0.4
Cycle Q Clear(g_c), s	1.9	0.0	0.5	3.2	0.0	0.3	2.0	8.0	0.0	0.2	10.2	0.4
Prop In Lane	0.73		1.00	1.00		0.06	1.00		1.00	1.00		1.00
Lane Grp Cap(c), veh/h	375	0	232	310	0	275	443	854	726	436	721	611
V/C Ratio(X)	0.22	0.00	0.10	0.14	0.00	0.06	0.33	0.57	0.00	0.04	0.73	0.04
Avail Cap(c_a), veh/h	1030	0	925	905	0	1094	927	2258	1920	1047	2258	1912
HCM Platoon Ratio	1.00	1.00	1.00	1.00	1.00	1.00	1.00	1.00	1.00	1.00	1.00	1.00
Upstream Filter(I)	1.00	0.00	1.00	1.00	0.00	1.00	1.00	1.00	0.00	1.00	1.00	1.00
Uniform Delay (d), s/veh	16.0	0.0	15.5	17.5	0.0	15.4	7.9	8.3	0.0	8.0	11.0	8.0
Incr Delay (d2), s/veh	0.3	0.0	0.2	0.2	0.0	0.1	0.4	0.6	0.0	0.0	1.4	0.0
Initial Q Delay(d3),s/veh	0.0	0.0	0.0	0.0	0.0	0.0	0.0	0.0	0.0	0.0	0.0	0.0
%ile BackOfQ(50%),veh/ln	0.9	0.0	0.2	0.5	0.0	0.2	1.0	4.2	0.0	0.1	5.4	0.2
LnGrp Delay(d),s/veh	16.3	0.0	15.6	17.7	0.0	15.5	8.4	8.9	0.0	8.0	12.5	8.1
LnGrp LOS	B		B	B		B	A	A		A	B	A
Approach Vol, veh/h		105			60			631			568	
Approach Delay, s/veh		16.1			17.0			8.8			12.1	
Approach LOS		B			B			A			B	

Timer	1	2	3	4	5	6	7	8
Assigned Phs	1	2		4	5	6		8
Phs Duration (G+Y+Rc), s	5.5	25.3		11.3	8.5	22.3		11.3
Change Period (Y+Rc), s	5.0	6.0		5.0	5.0	6.0		5.0
Max Green Setting (Gmax), s	15.0	51.0		25.0	15.0	51.0		25.0
Max Q Clear Time (g_c+I1), s	2.2	10.0		3.9	4.0	12.2		5.2
Green Ext Time (p_c), s	0.0	3.3		0.4	0.3	3.8		0.1

Intersection Summary	
HCM 2010 Ctrl Delay	11.1
HCM 2010 LOS	B

Movement	EBL	EBT	EBR	WBL	WBT	WBR	NBL	NBT	NBR	SBL	SBT	SBR
Lane Configurations												
Traffic Volume (veh/h)	40	5	85	10	5	10	80	550	15	5	675	50
Future Volume (veh/h)	40	5	85	10	5	10	80	550	15	5	675	50
Number	7	4	14	3	8	18	5	2	12	1	6	16
Initial Q (Qb), veh	0	0	0	0	0	0	0	0	0	0	0	0
Ped-Bike Adj(A_pbT)	1.00		0.99	1.00		1.00	1.00		1.00	1.00		1.00
Parking Bus, Adj	1.00	1.00	1.00	1.00	1.00	1.00	1.00	1.00	1.00	1.00	1.00	1.00
Adj Sat Flow, veh/h/ln	1863	1863	1900	1863	1863	1863	1863	1863	1863	1863	1863	1863
Adj Flow Rate, veh/h	43	5	7	11	5	1	87	598	9	5	734	26
Adj No. of Lanes	1	1	0	1	1	1	1	1	1	1	1	1
Peak Hour Factor	0.92	0.92	0.92	0.92	0.92	0.92	0.92	0.92	0.92	0.92	0.92	0.92
Percent Heavy Veh, %	2	2	2	2	2	2	2	2	2	2	2	2
Cap, veh/h	61	78	110	20	166	141	115	1000	850	7	887	753
Arrive On Green	0.03	0.11	0.11	0.01	0.09	0.09	0.06	0.54	0.54	0.00	0.48	0.48
Sat Flow, veh/h	1774	700	980	1774	1863	1583	1774	1863	1583	1774	1863	1582
Grp Volume(v), veh/h	43	0	12	11	5	1	87	598	9	5	734	26
Grp Sat Flow(s),veh/h/ln	1774	0	1679	1774	1863	1583	1774	1863	1583	1774	1863	1582
Q Serve(g_s), s	1.4	0.0	0.4	0.4	0.1	0.0	2.9	13.0	0.2	0.2	20.3	0.5
Cycle Q Clear(g_c), s	1.4	0.0	0.4	0.4	0.1	0.0	2.9	13.0	0.2	0.2	20.3	0.5
Prop In Lane	1.00		0.58	1.00		1.00	1.00		1.00	1.00		1.00
Lane Grp Cap(c), veh/h	61	0	188	20	166	141	115	1000	850	7	887	753
V/C Ratio(X)	0.71	0.00	0.06	0.55	0.03	0.01	0.76	0.60	0.01	0.70	0.83	0.03
Avail Cap(c_a), veh/h	596	0	592	596	657	558	745	2033	1728	745	2033	1727
HCM Platoon Ratio	1.00	1.00	1.00	1.00	1.00	1.00	1.00	1.00	1.00	1.00	1.00	1.00
Upstream Filter(I)	1.00	0.00	1.00	1.00	1.00	1.00	1.00	1.00	1.00	1.00	1.00	1.00
Uniform Delay (d), s/veh	28.5	0.0	23.6	29.3	24.8	24.7	27.4	9.4	6.4	29.6	13.5	8.3
Incr Delay (d2), s/veh	14.1	0.0	0.1	22.0	0.1	0.0	9.7	0.6	0.0	81.2	2.0	0.0
Initial Q Delay(d3),s/veh	0.0	0.0	0.0	0.0	0.0	0.0	0.0	0.0	0.0	0.0	0.0	0.0
%ile BackOfQ(50%),veh/ln	0.9	0.0	0.2	0.3	0.1	0.0	1.7	6.8	0.1	0.2	10.7	0.2
LnGrp Delay(d),s/veh	42.6	0.0	23.8	51.3	24.8	24.7	37.1	10.0	6.4	110.8	15.5	8.3
LnGrp LOS	D		C	D	C	C	D	A	A	F	B	A
Approach Vol, veh/h		55			17			694			765	
Approach Delay, s/veh		38.5			42.0			13.3			15.9	
Approach LOS		D			D			B			B	

Timer	1	2	3	4	5	6	7	8
Assigned Phs	1	2	3	4	5	6	7	8
Phs Duration (G+Y+Rc), s	5.2	37.0	5.7	11.7	8.9	33.4	7.0	10.3
Change Period (Y+Rc), s	5.0	5.0	5.0	5.0	5.0	5.0	5.0	5.0
Max Green Setting (Gmax), s	25.0	65.0	20.0	21.0	25.0	65.0	20.0	21.0
Max Q Clear Time (g_c+I1), s	2.2	15.0	2.4	2.4	4.9	22.3	3.4	2.1
Green Ext Time (p_c), s	0.0	4.5	0.0	0.0	0.2	6.1	0.1	0.0

Intersection Summary	
HCM 2010 Ctrl Delay	15.8
HCM 2010 LOS	B

Movement	EBL	EBT	EBR	WBL	WBT	WBR	NBL	NBT	NBR	SBL	SBT	SBR
Lane Configurations												
Traffic Volume (veh/h)	50	10	595	10	0	5	410	595	5	0	730	50
Future Volume (veh/h)	50	10	595	10	0	5	410	595	5	0	730	50
Number	3	8	18	7	4	14	1	6	16	5	2	12
Initial Q (Qb), veh	0	0	0	0	0	0	0	0	0	0	0	0
Ped-Bike Adj(A_pbT)	1.00		1.00	1.00		1.00	1.00		1.00	1.00		1.00
Parking Bus, Adj	1.00	1.00	1.00	1.00	1.00	1.00	1.00	1.00	1.00	1.00	1.00	1.00
Adj Sat Flow, veh/h/ln	1900	1863	1863	1900	1863	1900	1863	1863	1900	1863	1863	1863
Adj Flow Rate, veh/h	54	11	0	11	0	1	446	647	5	0	793	17
Adj No. of Lanes	0	1	1	0	1	0	1	2	0	1	2	1
Peak Hour Factor	0.92	0.92	0.92	0.92	0.92	0.92	0.92	0.92	0.92	0.92	0.92	0.92
Percent Heavy Veh, %	2	2	2	2	2	2	2	2	2	2	2	2
Cap, veh/h	190	15	97	206	4	8	516	2695	21	3	1376	613
Arrive On Green	0.08	0.06	0.00	0.08	0.00	0.06	0.29	0.75	0.75	0.00	0.39	0.39
Sat Flow, veh/h	1239	252	1583	1407	67	134	1774	3600	28	1774	3539	1577
Grp Volume(v), veh/h	65	0	0	12	0	0	446	318	334	0	793	17
Grp Sat Flow(s),veh/h/ln	1491	0	1583	1608	0	0	1774	1770	1858	1774	1770	1577
Q Serve(g_s), s	2.0	0.0	0.0	0.0	0.0	0.0	13.8	3.2	3.2	0.0	10.2	0.4
Cycle Q Clear(g_c), s	2.4	0.0	0.0	0.4	0.0	0.0	13.8	3.2	3.2	0.0	10.2	0.4
Prop In Lane	0.83		1.00	0.92		0.08	1.00		0.01	1.00		1.00
Lane Grp Cap(c), veh/h	231	0	97	246	0	0	516	1325	1391	3	1376	613
V/C Ratio(X)	0.28	0.00	0.00	0.05	0.00	0.00	0.87	0.24	0.24	0.00	0.58	0.03
Avail Cap(c_a), veh/h	648	0	547	769	0	0	2176	2110	2215	2176	4219	1880
HCM Platoon Ratio	1.00	1.00	1.00	1.00	1.00	1.00	1.00	1.00	1.00	1.00	1.00	1.00
Upstream Filter(I)	1.00	0.00	0.00	1.00	0.00	0.00	1.00	1.00	1.00	0.00	1.00	1.00
Uniform Delay (d), s/veh	26.2	0.0	0.0	25.2	0.0	0.0	19.5	2.2	2.2	0.0	13.9	10.9
Incr Delay (d2), s/veh	0.7	0.0	0.0	0.1	0.0	0.0	1.7	0.2	0.2	0.0	0.8	0.0
Initial Q Delay(d3),s/veh	0.0	0.0	0.0	0.0	0.0	0.0	0.0	0.0	0.0	0.0	0.0	0.0
%ile BackOfQ(50%),veh/ln	1.0	0.0	0.0	0.2	0.0	0.0	6.9	1.6	1.7	0.0	5.1	0.2
LnGrp Delay(d),s/veh	26.8	0.0	0.0	25.3	0.0	0.0	21.2	2.4	2.4	0.0	14.7	11.0
LnGrp LOS	C			C			C	A	A		B	B
Approach Vol, veh/h		65			12			1098			810	
Approach Delay, s/veh		26.8			25.3			10.1			14.7	
Approach LOS		C			C			B			B	

Timer	1	2	3	4	5	6	7	8
Assigned Phs	1	2		4	5	6		8
Phs Duration (G+Y+Rc), s	20.8	28.5		8.6	0.0	49.3		8.6
Change Period (Y+Rc), s	4.0	6.0		5.0	4.0	6.0		5.0
Max Green Setting (Gmax), s	71.0	69.0		25.0	71.0	69.0		20.0
Max Q Clear Time (g_c+I1), s	15.8	12.2		2.4	0.0	5.2		4.4
Green Ext Time (p_c), s	1.0	10.3		0.0	0.0	7.0		0.1

Intersection Summary	
HCM 2010 Ctrl Delay	12.6
HCM 2010 LOS	B

Movement	EBL	EBT	EBR	WBL	WBT	WBR	NBL	NBT	NBR	SBL	SBT	SBR
Lane Configurations												
Traffic Volume (veh/h)	55	5	145	15	5	15	105	950	20	10	1295	65
Future Volume (veh/h)	55	5	145	15	5	15	105	950	20	10	1295	65
Number	3	8	18	7	4	14	1	6	16	5	2	12
Initial Q (Qb), veh	0	0	0	0	0	0	0	0	0	0	0	0
Ped-Bike Adj(A_pbT)	0.98		0.98	0.98		0.98	1.00		1.00	1.00		1.00
Parking Bus, Adj	1.00	1.00	1.00	1.00	1.00	1.00	1.00	1.00	1.00	1.00	1.00	1.00
Adj Sat Flow, veh/h/ln	1900	1863	1863	1900	1863	1900	1863	1863	1900	1863	1863	1863
Adj Flow Rate, veh/h	60	5	6	16	5	1	114	1033	21	11	1408	38
Adj No. of Lanes	0	1	1	0	1	0	1	2	0	1	2	1
Peak Hour Factor	0.92	0.92	0.92	0.92	0.92	0.92	0.92	0.92	0.92	0.92	0.92	0.92
Percent Heavy Veh, %	2	2	2	2	2	2	2	2	2	2	2	2
Cap, veh/h	224	14	142	154	37	5	146	2493	51	15	2225	993
Arrive On Green	0.11	0.09	0.09	0.11	0.09	0.09	0.08	0.70	0.70	0.01	0.63	0.63
Sat Flow, veh/h	1370	155	1547	724	400	54	1774	3548	72	1774	3539	1580
Grp Volume(v), veh/h	65	0	6	22	0	0	114	515	539	11	1408	38
Grp Sat Flow(s),veh/h/ln	1525	0	1547	1177	0	0	1774	1770	1850	1774	1770	1580
Q Serve(g_s), s	0.0	0.0	0.3	0.1	0.0	0.0	4.5	8.7	8.7	0.4	17.4	0.7
Cycle Q Clear(g_c), s	2.4	0.0	0.3	2.5	0.0	0.0	4.5	8.7	8.7	0.4	17.4	0.7
Prop In Lane	0.92		1.00	0.73		0.05	1.00		0.04	1.00		1.00
Lane Grp Cap(c), veh/h	259	0	142	212	0	0	146	1244	1300	15	2225	993
V/C Ratio(X)	0.25	0.00	0.04	0.10	0.00	0.00	0.78	0.41	0.41	0.75	0.63	0.04
Avail Cap(c_a), veh/h	586	0	501	553	0	0	524	2141	2238	275	3784	1689
HCM Platoon Ratio	1.00	1.00	1.00	1.00	1.00	1.00	1.00	1.00	1.00	1.00	1.00	1.00
Upstream Filter(I)	1.00	0.00	1.00	1.00	0.00	0.00	1.00	1.00	1.00	1.00	1.00	1.00
Uniform Delay (d), s/veh	30.0	0.0	29.4	29.4	0.0	0.0	32.0	4.4	4.4	35.2	8.1	5.0
Incr Delay (d2), s/veh	0.2	0.0	0.0	0.1	0.0	0.0	3.4	0.5	0.5	24.5	0.6	0.0
Initial Q Delay(d3),s/veh	0.0	0.0	0.0	0.0	0.0	0.0	0.0	0.0	0.0	0.0	0.0	0.0
%ile BackOfQ(50%),veh/ln	1.2	0.0	0.1	0.4	0.0	0.0	2.3	4.3	4.5	0.3	8.6	0.3
LnGrp Delay(d),s/veh	30.2	0.0	29.5	29.5	0.0	0.0	35.3	4.9	4.9	59.7	8.8	5.1
LnGrp LOS	C		C	C			D	A	A	E	A	A
Approach Vol, veh/h		71			22			1168			1457	
Approach Delay, s/veh		30.1			29.5			7.9			9.1	
Approach LOS		C			C			A			A	

Timer	1	2	3	4	5	6	7	8
Assigned Phs	1	2		4	5	6		8
Phs Duration (G+Y+Rc), s	9.9	49.7		11.5	4.6	55.0		11.5
Change Period (Y+Rc), s	4.0	5.0		5.0	4.0	5.0		5.0
Max Green Setting (Gmax), s	21.0	76.0		23.0	11.0	86.0		23.0
Max Q Clear Time (g_c+I1), s	6.5	19.4		4.5	2.4	10.7		4.4
Green Ext Time (p_c), s	0.1	25.2		0.0	0.0	14.4		0.1

Intersection Summary	
HCM 2010 Ctrl Delay	9.3
HCM 2010 LOS	A

Movement	EBL	EBT	EBR	WBL	WBT	WBR	NBL	NBT	NBR	SBL	SBT	SBR
Lane Configurations												
Traffic Volume (veh/h)	60	5	180	45	5	35	110	1025	50	30	1375	75
Future Volume (veh/h)	60	5	180	45	5	35	110	1025	50	30	1375	75
Number	3	8	18	7	4	14	1	6	16	5	2	12
Initial Q (Qb), veh	0	0	0	0	0	0	0	0	0	0	0	0
Ped-Bike Adj(A_pbT)	1.00		1.00	1.00		1.00	1.00		1.00	1.00		1.00
Parking Bus, Adj	1.00	1.00	1.00	1.00	1.00	1.00	1.00	1.00	1.00	1.00	1.00	1.00
Adj Sat Flow, veh/h/ln	1900	1863	1863	1863	1863	1900	1863	1863	1863	1863	1863	1863
Adj Flow Rate, veh/h	65	5	12	49	5	2	120	1114	34	33	1495	45
Adj No. of Lanes	0	1	1	1	1	0	1	2	1	1	2	1
Peak Hour Factor	0.92	0.92	0.92	0.92	0.92	0.92	0.92	0.92	0.92	0.92	0.92	0.92
Percent Heavy Veh, %	2	2	2	2	2	2	2	2	2	2	2	2
Cap, veh/h	275	18	232	230	186	75	154	2255	1009	57	2062	922
Arrive On Green	0.16	0.15	0.15	0.15	0.15	0.15	0.09	0.64	0.64	0.03	0.58	0.58
Sat Flow, veh/h	1293	121	1577	1386	1265	506	1774	3539	1583	1774	3539	1583
Grp Volume(v), veh/h	70	0	12	49	0	7	120	1114	34	33	1495	45
Grp Sat Flow(s),veh/h/ln	1415	0	1577	1386	0	1771	1774	1770	1583	1774	1770	1583
Q Serve(g_s), s	3.4	0.0	0.5	2.7	0.0	0.3	5.4	13.6	0.7	1.5	25.0	1.0
Cycle Q Clear(g_c), s	3.6	0.0	0.5	6.3	0.0	0.3	5.4	13.6	0.7	1.5	25.0	1.0
Prop In Lane	0.93		1.00	1.00		0.29	1.00		1.00	1.00		1.00
Lane Grp Cap(c), veh/h	311	0	232	230	0	261	154	2255	1009	57	2062	922
V/C Ratio(X)	0.23	0.00	0.05	0.21	0.00	0.03	0.78	0.49	0.03	0.58	0.73	0.05
Avail Cap(c_a), veh/h	519	0	463	433	0	520	456	2986	1336	260	2596	1162
HCM Platoon Ratio	1.00	1.00	1.00	1.00	1.00	1.00	1.00	1.00	1.00	1.00	1.00	1.00
Upstream Filter(I)	1.00	0.00	1.00	1.00	0.00	1.00	1.00	1.00	1.00	1.00	1.00	1.00
Uniform Delay (d), s/veh	30.9	0.0	30.0	34.1	0.0	29.9	36.6	7.9	5.5	39.0	12.3	7.3
Incr Delay (d2), s/veh	0.4	0.0	0.1	0.5	0.0	0.0	3.2	0.4	0.0	3.4	1.2	0.0
Initial Q Delay(d3),s/veh	0.0	0.0	0.0	0.0	0.0	0.0	0.0	0.0	0.0	0.0	0.0	0.0
%ile BackOfQ(50%),veh/ln	1.4	0.0	0.2	1.1	0.0	0.1	2.8	6.6	0.3	0.8	12.4	0.4
LnGrp Delay(d),s/veh	31.3	0.0	30.1	34.6	0.0	29.9	39.8	8.2	5.5	42.4	13.6	7.4
LnGrp LOS	C		C	C		C	D	A	A	D	B	A
Approach Vol, veh/h		82			56			1268			1573	
Approach Delay, s/veh		31.1			34.0			11.1			14.0	
Approach LOS		C			C			B			B	

Timer	1	2	3	4	5	6	7	8
Assigned Phs	1	2		4	5	6		8
Phs Duration (G+Y+Rc), s	11.1	53.6		17.0	6.6	58.1		17.0
Change Period (Y+Rc), s	4.0	6.0		5.0	4.0	6.0		5.0
Max Green Setting (Gmax), s	21.0	60.0		24.0	12.0	69.0		24.0
Max Q Clear Time (g_c+I1), s	7.4	27.0		8.3	3.5	15.6		5.6
Green Ext Time (p_c), s	0.2	20.7		0.1	0.0	17.1		0.2

Intersection Summary	
HCM 2010 Ctrl Delay	13.6
HCM 2010 LOS	B

Movement	EBL	EBT	EBR	WBL	WBT	WBR	NBL	NBT	NBR	SBL	SBT	SBR
Lane Configurations												
Traffic Volume (veh/h)	235	5	445	15	5	20	290	1150	15	55	1380	155
Future Volume (veh/h)	235	5	445	15	5	20	290	1150	15	55	1380	155
Number	3	8	18	7	4	14	1	6	16	5	2	12
Initial Q (Qb), veh	0	0	0	0	0	0	0	0	0	0	0	0
Ped-Bike Adj(A_pbT)	1.00		1.00	1.00		1.00	1.00		1.00	1.00		1.00
Parking Bus, Adj	1.00	1.00	1.00	1.00	1.00	1.00	1.00	1.00	1.00	1.00	1.00	1.00
Adj Sat Flow, veh/h/ln	1900	1863	1863	1900	1863	1900	1863	1863	1900	1863	1863	1863
Adj Flow Rate, veh/h	255	5	283	16	5	7	315	1250	16	60	1500	125
Adj No. of Lanes	0	1	2	0	1	0	2	2	0	1	2	1
Peak Hour Factor	0.92	0.92	0.92	0.92	0.92	0.92	0.92	0.92	0.92	0.92	0.92	0.92
Percent Heavy Veh, %	2	2	2	2	2	2	2	2	2	2	2	2
Cap, veh/h	321	6	836	45	14	20	423	2128	27	109	1888	844
Arrive On Green	0.18	0.18	0.18	0.05	0.05	0.02	0.12	0.59	0.58	0.06	0.53	0.53
Sat Flow, veh/h	1742	34	2787	992	310	434	3442	3578	46	1774	3539	1582
Grp Volume(v), veh/h	260	0	283	28	0	0	315	618	648	60	1500	125
Grp Sat Flow(s),veh/h/ln	1776	0	1393	1737	0	0	1721	1770	1855	1774	1770	1582
Q Serve(g_s), s	19.6	0.0	11.1	2.2	0.0	0.0	12.4	30.5	30.5	4.6	48.1	5.6
Cycle Q Clear(g_c), s	19.6	0.0	11.1	2.2	0.0	0.0	12.4	30.5	30.5	4.6	48.1	5.6
Prop In Lane	0.98		1.00	0.57		0.25	1.00		0.02	1.00		1.00
Lane Grp Cap(c), veh/h	327	0	836	78	0	0	423	1052	1103	109	1888	844
V/C Ratio(X)	0.79	0.00	0.34	0.36	0.00	0.00	0.74	0.59	0.59	0.55	0.79	0.15
Avail Cap(c_a), veh/h	431	0	1000	384	0	0	1426	2452	2570	190	3817	1707
HCM Platoon Ratio	1.00	1.00	1.00	1.00	1.00	1.00	1.00	1.00	1.00	1.00	1.00	1.00
Upstream Filter(I)	1.00	0.00	1.00	1.00	0.00	0.00	1.00	1.00	1.00	1.00	1.00	1.00
Uniform Delay (d), s/veh	54.6	0.0	38.2	65.2	0.0	0.0	59.3	17.7	17.7	63.8	26.5	16.6
Incr Delay (d2), s/veh	5.4	0.0	0.1	1.0	0.0	0.0	1.0	0.7	0.7	1.6	1.1	0.1
Initial Q Delay(d3),s/veh	0.0	0.0	0.0	0.0	0.0	0.0	0.0	0.0	0.0	0.0	0.0	0.0
%ile BackOfQ(50%),veh/ln	10.1	0.0	4.3	1.1	0.0	0.0	6.0	15.0	15.7	2.3	23.6	2.5
LnGrp Delay(d),s/veh	60.0	0.0	38.3	66.3	0.0	0.0	60.2	18.4	18.4	65.4	27.6	16.7
LnGrp LOS	E		D	E			E	B	B	E	C	B
Approach Vol, veh/h		543			28			1581			1685	
Approach Delay, s/veh		48.7			66.3			26.7			28.1	
Approach LOS		D			E			C			C	

Timer	1	2	3	4	5	6	7	8
Assigned Phs	1	2		4	5	6		8
Phs Duration (G+Y+Rc), s	21.2	78.7		10.3	12.6	87.3		29.8
Change Period (Y+Rc), s	6.0	6.0		7.0	6.0	6.0		7.0
Max Green Setting (Gmax), s	56.0	149.0		28.0	13.0	192.0		31.0
Max Q Clear Time (g_c+I1), s	14.4	50.1		4.2	6.6	32.5		21.6
Green Ext Time (p_c), s	0.9	22.6		0.0	0.0	12.5		1.2

Intersection Summary	
HCM 2010 Ctrl Delay	30.7
HCM 2010 LOS	C

Notes

Movement	EBL	EBT	EBR	WBL	WBT	WBR	NBL	NBT	NBR	SBL	SBT	SBR
Lane Configurations												
Traffic Volume (veh/h)	5	0	5	135	5	60	5	1330	90	90	1810	10
Future Volume (veh/h)	5	0	5	135	5	60	5	1330	90	90	1810	10
Number	3	8	18	7	4	14	1	6	16	5	2	12
Initial Q (Qb), veh	0	0	0	0	0	0	0	0	0	0	0	0
Ped-Bike Adj(A_pbT)	1.00		1.00	1.00		1.00	1.00		1.00	1.00		1.00
Parking Bus, Adj	1.00	1.00	1.00	1.00	1.00	1.00	1.00	1.00	1.00	1.00	1.00	1.00
Adj Sat Flow, veh/h/ln	1900	1863	1900	1863	1863	1900	1863	1863	1900	1863	1863	1900
Adj Flow Rate, veh/h	5	0	1	147	5	5	5	1446	95	98	1967	11
Adj No. of Lanes	0	1	0	1	1	0	1	2	0	1	2	0
Peak Hour Factor	0.92	0.92	0.92	0.92	0.92	0.92	0.92	0.92	0.92	0.92	0.92	0.92
Percent Heavy Veh, %	2	2	2	2	2	2	2	2	2	2	2	2
Cap, veh/h	194	5	30	234	107	107	11	2402	157	124	2800	16
Arrive On Green	0.13	0.00	0.12	0.13	0.13	0.12	0.01	0.95	0.94	0.07	0.78	0.77
Sat Flow, veh/h	1140	37	235	1410	856	856	1774	3373	221	1774	3609	20
Grp Volume(v), veh/h	6	0	0	147	0	10	5	756	785	98	964	1014
Grp Sat Flow(s),veh/h/ln	1412	0	0	1410	0	1712	1774	1770	1824	1774	1770	1859
Q Serve(g_s), s	0.0	0.0	0.0	12.4	0.0	0.7	0.4	6.8	7.0	7.1	34.8	35.0
Cycle Q Clear(g_c), s	0.7	0.0	0.0	13.0	0.0	0.7	0.4	6.8	7.0	7.1	34.8	35.0
Prop In Lane	0.83		0.17	1.00		0.50	1.00		0.12	1.00		0.01
Lane Grp Cap(c), veh/h	228	0	0	234	0	215	11	1260	1299	124	1373	1443
V/C Ratio(X)	0.03	0.00	0.00	0.63	0.00	0.05	0.44	0.60	0.60	0.79	0.70	0.70
Avail Cap(c_a), veh/h	312	0	0	318	0	316	150	1260	1299	150	1373	1443
HCM Platoon Ratio	1.00	1.00	1.00	1.00	1.00	1.00	1.33	1.33	1.33	1.00	1.00	1.00
Upstream Filter(I)	1.00	0.00	0.00	1.00	0.00	1.00	0.83	0.83	0.83	1.00	1.00	1.00
Uniform Delay (d), s/veh	50.0	0.0	0.0	55.3	0.0	50.2	64.2	1.2	1.2	59.5	7.2	7.2
Incr Delay (d2), s/veh	0.0	0.0	0.0	2.8	0.0	0.1	8.2	1.8	1.7	16.7	3.0	2.9
Initial Q Delay(d3),s/veh	0.0	0.0	0.0	0.0	0.0	0.0	0.0	0.0	0.0	0.0	0.0	0.0
%ile BackOfQ(50%),veh/ln	0.2	0.0	0.0	5.3	0.0	0.3	0.2	3.3	3.8	4.1	17.7	18.9
LnGrp Delay(d),s/veh	50.0	0.0	0.0	58.1	0.0	50.3	72.4	2.9	2.9	76.2	10.2	10.1
LnGrp LOS	D			E		D	E	A	A	E	B	B
Approach Vol, veh/h		6			157			1546			2076	
Approach Delay, s/veh		50.0			57.6			3.2			13.3	
Approach LOS		D			E			A			B	

Timer	1	2	3	4	5	6	7	8
Assigned Phs	1	2		4	5	6		8
Phs Duration (G+Y+Rc), s	4.8	104.9		20.3	13.1	96.6		20.3
Change Period (Y+Rc), s	4.0	5.0		5.0	4.0	5.0		5.0
Max Green Setting (Gmax), s	11.0	82.0		23.0	11.0	82.0		23.0
Max Q Clear Time (g_c+I1), s	2.4	37.0		15.0	9.1	9.0		2.7
Green Ext Time (p_c), s	0.0	34.6		0.3	0.0	30.2		0.0

Intersection Summary	
HCM 2010 Ctrl Delay	11.0
HCM 2010 LOS	B

Movement	EBL	EBT	EBR	WBL	WBT	WBR	NBL	NBT	NBR	SBL	SBT	SBR
Lane Configurations												
Traffic Volume (veh/h)	135	5	15	65	5	15	15	1275	15	10	1595	260
Future Volume (veh/h)	135	5	15	65	5	15	15	1275	15	10	1595	260
Number	3	8	18	7	4	14	1	6	16	5	2	12
Initial Q (Qb), veh	0	0	0	0	0	0	0	0	0	0	0	0
Ped-Bike Adj(A_pbT)	1.00		1.00	1.00		1.00	1.00		1.00	1.00		1.00
Parking Bus, Adj	1.00	1.00	1.00	1.00	1.00	1.00	1.00	1.00	1.00	1.00	1.00	1.00
Adj Sat Flow, veh/h/ln	1900	1863	1900	1900	1863	1900	1863	1863	1900	1863	1863	1863
Adj Flow Rate, veh/h	147	5	13	71	5	9	16	1386	15	11	1734	207
Adj No. of Lanes	0	1	0	0	1	0	1	2	0	1	2	1
Peak Hour Factor	0.92	0.92	0.92	0.92	0.92	0.92	0.92	0.92	0.92	0.92	0.92	0.92
Percent Heavy Veh, %	2	2	2	2	2	2	2	2	2	2	2	2
Cap, veh/h	228	6	16	226	17	23	19	2757	30	13	2709	1211
Arrive On Green	0.13	0.13	0.12	0.13	0.13	0.12	0.01	0.52	0.51	0.01	0.77	0.77
Sat Flow, veh/h	1339	46	118	1336	132	174	1774	3587	39	1774	3539	1582
Grp Volume(v), veh/h	165	0	0	85	0	0	16	684	717	11	1734	207
Grp Sat Flow(s),veh/h/ln	1503	0	0	1642	0	0	1774	1770	1856	1774	1770	1582
Q Serve(g_s), s	7.8	0.0	0.0	0.0	0.0	0.0	1.2	32.9	32.9	0.8	29.3	4.6
Cycle Q Clear(g_c), s	13.7	0.0	0.0	5.9	0.0	0.0	1.2	32.9	32.9	0.8	29.3	4.6
Prop In Lane	0.89		0.08	0.84		0.11	1.00		0.02	1.00		1.00
Lane Grp Cap(c), veh/h	250	0	0	267	0	0	19	1360	1427	13	2709	1211
V/C Ratio(X)	0.66	0.00	0.00	0.32	0.00	0.00	0.84	0.50	0.50	0.82	0.64	0.17
Avail Cap(c_a), veh/h	347	0	0	365	0	0	109	1360	1427	109	2709	1211
HCM Platoon Ratio	1.00	1.00	1.00	1.00	1.00	1.00	0.67	0.67	0.67	1.00	1.00	1.00
Upstream Filter(I)	1.00	0.00	0.00	1.00	0.00	0.00	0.77	0.77	0.77	0.62	0.62	0.62
Uniform Delay (d), s/veh	54.8	0.0	0.0	51.7	0.0	0.0	64.4	15.3	15.3	64.4	7.0	4.1
Incr Delay (d2), s/veh	3.0	0.0	0.0	0.7	0.0	0.0	23.5	1.0	1.0	23.6	0.7	0.2
Initial Q Delay(d3),s/veh	0.0	0.0	0.0	0.0	0.0	0.0	0.0	0.0	0.0	0.0	0.0	0.0
%ile BackOfQ(50%),veh/ln	6.0	0.0	0.0	2.8	0.0	0.0	0.7	16.4	17.2	0.5	14.2	2.0
LnGrp Delay(d),s/veh	57.7	0.0	0.0	52.3	0.0	0.0	87.9	16.3	16.3	88.0	7.7	4.3
LnGrp LOS	E			D			F	B	B	F	A	A
Approach Vol, veh/h		165			85			1417			1952	
Approach Delay, s/veh		57.7			52.3			17.1			7.8	
Approach LOS		E			D			B			A	

Timer	1	2	3	4	5	6	7	8
Assigned Phs	1	2		4	5	6		8
Phs Duration (G+Y+Rc), s	5.4	103.5		21.1	5.0	103.9		21.1
Change Period (Y+Rc), s	4.0	5.0		5.0	4.0	5.0		5.0
Max Green Setting (Gmax), s	8.0	83.0		25.0	8.0	83.0		25.0
Max Q Clear Time (g_c+I1), s	3.2	31.3		7.9	2.8	34.9		15.7
Green Ext Time (p_c), s	0.0	42.2		0.2	0.0	28.5		0.4

Intersection Summary	
HCM 2010 Ctrl Delay	14.8
HCM 2010 LOS	B

Movement	EBL	EBT	EBR	WBL	WBT	WBR	NBL	NBT	NBR	SBL	SBT	SBR
Lane Configurations												
Traffic Volume (veh/h)	190	20	50	90	20	20	60	1305	60	15	1605	130
Future Volume (veh/h)	190	20	50	90	20	20	60	1305	60	15	1605	130
Number	3	8	18	7	4	14	1	6	16	5	2	12
Initial Q (Qb), veh	0	0	0	0	0	0	0	0	0	0	0	0
Ped-Bike Adj(A_pbT)	1.00		1.00	1.00		1.00	1.00		0.99	1.00		1.00
Parking Bus, Adj	1.00	1.00	1.00	1.00	1.00	1.00	1.00	1.00	1.00	1.00	1.00	1.00
Adj Sat Flow, veh/h/ln	1900	1863	1863	1863	1863	1900	1863	1863	1900	1863	1863	1900
Adj Flow Rate, veh/h	207	22	11	98	22	2	65	1418	63	16	1745	137
Adj No. of Lanes	0	1	1	1	1	0	1	2	0	1	2	0
Peak Hour Factor	0.92	0.92	0.92	0.92	0.92	0.92	0.92	0.92	0.92	0.92	0.92	0.92
Percent Heavy Veh, %	2	2	2	2	2	2	2	2	2	2	2	2
Cap, veh/h	286	25	305	373	326	30	83	2428	108	19	2221	172
Arrive On Green	0.19	0.19	0.19	0.19	0.19	0.19	0.06	0.94	0.93	0.02	1.00	1.00
Sat Flow, veh/h	1205	128	1576	1380	1682	153	1774	3451	153	1774	3328	258
Grp Volume(v), veh/h	229	0	11	98	0	24	65	726	755	16	918	964
Grp Sat Flow(s),veh/h/ln	1333	0	1576	1380	0	1835	1774	1770	1835	1774	1770	1817
Q Serve(g_s), s	20.6	0.0	0.7	0.0	0.0	1.4	4.7	7.6	7.7	1.2	0.0	0.0
Cycle Q Clear(g_c), s	22.0	0.0	0.7	6.5	0.0	1.4	4.7	7.6	7.7	1.2	0.0	0.0
Prop In Lane	0.90		1.00	1.00		0.08	1.00		0.08	1.00		0.14
Lane Grp Cap(c), veh/h	311	0	305	373	0	355	83	1245	1291	19	1181	1213
V/C Ratio(X)	0.74	0.00	0.04	0.26	0.00	0.07	0.79	0.58	0.59	0.84	0.78	0.79
Avail Cap(c_a), veh/h	331	0	327	393	0	381	109	1245	1291	109	1181	1213
HCM Platoon Ratio	1.00	1.00	1.00	1.00	1.00	1.00	1.33	1.33	1.33	2.00	2.00	2.00
Upstream Filter(I)	1.00	0.00	1.00	1.00	0.00	1.00	0.64	0.64	0.64	0.70	0.70	0.70
Uniform Delay (d), s/veh	51.8	0.0	42.6	44.9	0.0	42.9	60.3	1.5	1.5	63.5	0.0	0.0
Incr Delay (d2), s/veh	7.9	0.0	0.0	0.4	0.0	0.1	11.6	1.3	1.2	21.7	3.6	3.8
Initial Q Delay(d3),s/veh	0.0	0.0	0.0	0.0	0.0	0.0	0.0	0.0	0.0	0.0	0.0	0.0
%ile BackOfQ(50%),veh/ln	8.7	0.0	0.3	3.1	0.0	0.7	2.6	3.6	4.0	0.7	1.2	1.3
LnGrp Delay(d),s/veh	59.7	0.0	42.6	45.3	0.0	42.9	71.9	2.8	2.8	85.2	3.6	3.8
LnGrp LOS	E		D	D		D	E	A	A	F	A	A
Approach Vol, veh/h		240			122			1546			1898	
Approach Delay, s/veh		58.9			44.8			5.7			4.4	
Approach LOS		E			D			A			A	

Timer	1	2	3	4	5	6	7	8
Assigned Phs	1	2		4	5	6		8
Phs Duration (G+Y+Rc), s	10.1	90.8		29.2	5.4	95.4		29.2
Change Period (Y+Rc), s	4.0	5.0		5.0	4.0	5.0		5.0
Max Green Setting (Gmax), s	8.0	82.0		26.0	8.0	82.0		26.0
Max Q Clear Time (g_c+I1), s	6.7	2.0		8.5	3.2	9.7		24.0
Green Ext Time (p_c), s	0.0	47.6		0.4	0.0	27.7		0.2

Intersection Summary	
HCM 2010 Ctrl Delay	9.7
HCM 2010 LOS	A

Notes

Movement	EBL	EBT	EBR	WBL	WBT	WBR	NBL	NBT	NBR	SBL	SBT	SBR
Lane Configurations												
Traffic Volume (veh/h)	60	150	90	145	130	650	80	715	195	570	950	100
Future Volume (veh/h)	60	150	90	145	130	650	80	715	195	570	950	100
Number	7	4	14	3	8	18	1	6	16	5	2	12
Initial Q (Qb), veh	0	0	0	0	0	0	0	0	0	0	0	0
Ped-Bike Adj(A_pbT)	0.98		0.95	1.00		0.97	1.00		0.99	1.00		1.00
Parking Bus, Adj	1.00	1.00	1.00	1.00	1.00	1.00	1.00	1.00	1.00	1.00	1.00	1.00
Adj Sat Flow, veh/h/ln	1900	1863	1863	1863	1863	1863	1863	1863	1863	1863	1863	1900
Adj Flow Rate, veh/h	65	163	10	158	141	317	87	777	127	620	1033	104
Adj No. of Lanes	0	1	1	1	1	1	1	2	1	2	2	0
Peak Hour Factor	0.92	0.92	0.92	0.92	0.92	0.92	0.92	0.92	0.92	0.92	0.92	0.92
Percent Heavy Veh, %	2	2	2	2	2	2	2	2	2	2	2	2
Cap, veh/h	100	195	266	253	560	463	110	1423	628	706	1771	178
Arrive On Green	0.18	0.18	0.18	0.09	0.30	0.30	0.06	0.40	0.40	0.07	0.18	0.18
Sat Flow, veh/h	367	1109	1511	1774	1863	1541	1774	3539	1562	3442	3247	327
Grp Volume(v), veh/h	228	0	10	158	141	317	87	777	127	620	563	574
Grp Sat Flow(s),veh/h/ln	1476	0	1511	1774	1863	1541	1774	1770	1562	1721	1770	1805
Q Serve(g_s), s	17.1	0.0	0.7	9.1	7.4	23.6	6.3	21.9	6.9	23.2	37.9	37.9
Cycle Q Clear(g_c), s	19.4	0.0	0.7	9.1	7.4	23.6	6.3	21.9	6.9	23.2	37.9	37.9
Prop In Lane	0.29		1.00	1.00		1.00	1.00		1.00	1.00		0.18
Lane Grp Cap(c), veh/h	296	0	266	253	560	463	110	1423	628	706	965	984
V/C Ratio(X)	0.77	0.00	0.04	0.62	0.25	0.68	0.79	0.55	0.20	0.88	0.58	0.58
Avail Cap(c_a), veh/h	330	0	302	279	630	521	328	1423	628	953	965	984
HCM Platoon Ratio	1.00	1.00	1.00	1.00	1.00	1.00	1.00	1.00	1.00	0.33	0.33	0.33
Upstream Filter(I)	1.00	0.00	1.00	1.00	1.00	1.00	0.79	0.79	0.79	0.52	0.52	0.52
Uniform Delay (d), s/veh	51.8	0.0	44.4	38.5	34.4	40.0	60.2	29.8	25.3	59.0	39.8	39.8
Incr Delay (d2), s/veh	9.7	0.0	0.1	3.7	0.2	3.2	3.8	1.2	0.6	3.2	1.3	1.3
Initial Q Delay(d3),s/veh	0.0	0.0	0.0	0.0	0.0	0.0	0.0	0.0	0.0	0.0	0.0	0.0
%ile BackOfQ(50%),veh/ln	8.8	0.0	0.3	4.6	3.9	10.4	3.2	10.9	3.1	11.4	19.0	19.4
LnGrp Delay(d),s/veh	61.5	0.0	44.5	42.2	34.6	43.2	64.0	31.0	25.9	62.2	41.1	41.1
LnGrp LOS	E		D	D	C	D	E	C	C	E	D	D
Approach Vol, veh/h		238			616			991			1757	
Approach Delay, s/veh		60.8			41.0			33.2			48.6	
Approach LOS		E			D			C			D	

Timer	1	2	3	4	5	6	7	8
Assigned Phs	1	2	3	4	5	6		8
Phs Duration (G+Y+Rc), s	12.0	74.9	16.1	26.9	30.7	56.3		43.1
Change Period (Y+Rc), s	4.0	5.0	5.0	5.0	4.0	5.0		5.0
Max Green Setting (Gmax), s	24.0	49.0	13.0	25.0	36.0	37.0		43.0
Max Q Clear Time (g_c+I1), s	8.3	39.9	11.1	21.4	25.2	23.9		25.6
Green Ext Time (p_c), s	0.1	5.9	0.1	0.3	1.4	6.5		2.0

Intersection Summary	
HCM 2010 Ctrl Delay	43.9
HCM 2010 LOS	D

Notes

APPENDIX C

LEVEL OF SERVICE CALCULATIONS

- Base Year 2022 with Mitigation AM Peak

HCM 2010 Signalized Intersection Summary
1: Honoapiilani Highway & Napilihau Street

08/09/2017

Movement	EBL	EBT	EBR	WBL	WBT	WBR	NBL	NBT	NBR	SBL	SBT	SBR
Lane Configurations												
Traffic Volume (veh/h)	50	45	295	90	50	20	220	230	100	10	135	30
Future Volume (veh/h)	50	45	295	90	50	20	220	230	100	10	135	30
Number	7	4	14	3	8	18	5	2	12	1	6	16
Initial Q (Qb), veh	0	0	0	0	0	0	0	0	0	0	0	0
Ped-Bike Adj(A_pbT)	0.99		0.99	0.99		0.99	1.00		1.00	1.00		1.00
Parking Bus, Adj	1.00	1.00	1.00	1.00	1.00	1.00	1.00	1.00	1.00	1.00	1.00	1.00
Adj Sat Flow, veh/h/ln	1900	1863	1863	1863	1863	1900	1863	1863	1863	1863	1863	1863
Adj Flow Rate, veh/h	54	49	42	98	54	11	239	250	51	11	147	8
Adj No. of Lanes	0	1	1	1	1	0	1	1	1	1	1	1
Peak Hour Factor	0.92	0.92	0.92	0.92	0.92	0.92	0.92	0.92	0.92	0.92	0.92	0.92
Percent Heavy Veh, %	2	2	2	2	2	2	2	2	2	2	2	2
Cap, veh/h	239	165	258	328	247	50	320	789	671	15	469	399
Arrive On Green	0.16	0.16	0.16	0.16	0.16	0.16	0.18	0.42	0.42	0.01	0.25	0.25
Sat Flow, veh/h	612	999	1569	1291	1500	306	1774	1863	1583	1774	1863	1583
Grp Volume(v), veh/h	103	0	42	98	0	65	239	250	51	11	147	8
Grp Sat Flow(s),veh/h/ln	1612	0	1569	1291	0	1806	1774	1863	1583	1774	1863	1583
Q Serve(g_s), s	0.5	0.0	0.9	2.9	0.0	1.2	5.1	3.5	0.8	0.2	2.5	0.2
Cycle Q Clear(g_c), s	2.0	0.0	0.9	4.9	0.0	1.2	5.1	3.5	0.8	0.2	2.5	0.2
Prop In Lane	0.52		1.00	1.00		0.17	1.00		1.00	1.00		1.00
Lane Grp Cap(c), veh/h	404	0	258	328	0	297	320	789	671	15	469	399
V/C Ratio(X)	0.26	0.00	0.16	0.30	0.00	0.22	0.75	0.32	0.08	0.72	0.31	0.02
Avail Cap(c_a), veh/h	1078	0	948	896	0	1091	1341	3706	3151	670	3003	2552
HCM Platoon Ratio	1.00	1.00	1.00	1.00	1.00	1.00	1.00	1.00	1.00	1.00	1.00	1.00
Upstream Filter(I)	1.00	0.00	1.00	1.00	0.00	1.00	1.00	1.00	1.00	1.00	1.00	1.00
Uniform Delay (d), s/veh	14.7	0.0	14.2	16.9	0.0	14.4	15.4	7.6	6.8	19.6	12.1	11.2
Incr Delay (d2), s/veh	0.3	0.0	0.3	0.5	0.0	0.4	3.5	0.5	0.1	47.2	0.8	0.0
Initial Q Delay(d3),s/veh	0.0	0.0	0.0	0.0	0.0	0.0	0.0	0.0	0.0	0.0	0.0	0.0
%ile BackOfQ(50%),veh/ln	1.0	0.0	0.4	1.1	0.0	0.6	2.8	1.9	0.3	0.3	1.4	0.1
LnGrp Delay(d),s/veh	15.0	0.0	14.5	17.4	0.0	14.7	18.9	8.1	6.9	66.8	12.9	11.2
LnGrp LOS	B		B	B		B	B	A	A	E	B	B
Approach Vol, veh/h		145			163			540			166	
Approach Delay, s/veh		14.9			16.3			12.8			16.4	
Approach LOS		B			B			B			B	

Timer	1	2	3	4	5	6	7	8
Assigned Phs	1	2		4	5	6		8
Phs Duration (G+Y+Rc), s	5.3	22.8		11.5	12.2	16.0		11.5
Change Period (Y+Rc), s	5.0	6.0		5.0	5.0	6.0		5.0
Max Green Setting (Gmax), s	15.0	79.0		24.0	30.0	64.0		24.0
Max Q Clear Time (g_c+I1), s	2.2	5.5		4.0	7.1	4.5		6.9
Green Ext Time (p_c), s	0.0	3.7		0.6	0.7	1.8		0.6

Intersection Summary	
HCM 2010 Ctrl Delay	14.2
HCM 2010 LOS	B

Movement	EBL	EBT	EBR	WBL	WBT	WBR	NBL	NBT	NBR	SBL	SBT	SBR
Lane Configurations												
Traffic Volume (veh/h)	60	5	180	90	20	15	135	515	15	10	515	65
Future Volume (veh/h)	60	5	180	90	20	15	135	515	15	10	515	65
Number	7	4	14	3	8	18	5	2	12	1	6	16
Initial Q (Qb), veh	0	0	0	0	0	0	0	0	0	0	0	0
Ped-Bike Adj(A_pbT)	0.98		0.97	0.98		0.97	1.00		1.00	1.00		0.99
Parking Bus, Adj	1.00	1.00	1.00	1.00	1.00	1.00	1.00	1.00	1.00	1.00	1.00	1.00
Adj Sat Flow, veh/h/ln	1900	1863	1863	1863	1863	1900	1863	1863	1863	1863	1863	1863
Adj Flow Rate, veh/h	65	5	20	98	22	2	147	560	0	11	560	28
Adj No. of Lanes	0	1	1	1	1	0	1	1	1	1	1	1
Peak Hour Factor	0.92	0.92	0.92	0.92	0.92	0.92	0.92	0.92	0.92	0.92	0.92	0.92
Percent Heavy Veh, %	2	2	2	2	2	2	2	2	2	2	2	2
Cap, veh/h	381	24	309	347	336	31	409	878	746	365	725	612
Arrive On Green	0.20	0.20	0.20	0.20	0.20	0.20	0.09	0.47	0.00	0.01	0.39	0.39
Sat Flow, veh/h	1209	122	1544	1351	1679	153	1774	1863	1583	1774	1863	1571
Grp Volume(v), veh/h	70	0	20	98	0	24	147	560	0	11	560	28
Grp Sat Flow(s),veh/h/ln	1331	0	1544	1351	0	1831	1774	1863	1583	1774	1863	1571
Q Serve(g_s), s	1.9	0.0	0.5	3.3	0.0	0.5	2.2	11.3	0.0	0.2	13.1	0.6
Cycle Q Clear(g_c), s	2.5	0.0	0.5	5.8	0.0	0.5	2.2	11.3	0.0	0.2	13.1	0.6
Prop In Lane	0.93		1.00	1.00		0.08	1.00		1.00	1.00		1.00
Lane Grp Cap(c), veh/h	405	0	309	347	0	366	409	878	746	365	725	612
V/C Ratio(X)	0.17	0.00	0.06	0.28	0.00	0.07	0.36	0.64	0.00	0.03	0.77	0.05
Avail Cap(c_a), veh/h	819	0	773	754	0	917	782	1903	1618	883	1903	1605
HCM Platoon Ratio	1.00	1.00	1.00	1.00	1.00	1.00	1.00	1.00	1.00	1.00	1.00	1.00
Upstream Filter(I)	1.00	0.00	1.00	1.00	0.00	1.00	1.00	1.00	0.00	1.00	1.00	1.00
Uniform Delay (d), s/veh	17.1	0.0	16.2	19.4	0.0	16.2	9.2	10.0	0.0	9.6	13.3	9.5
Incr Delay (d2), s/veh	0.2	0.0	0.1	0.4	0.0	0.1	0.5	0.8	0.0	0.0	1.8	0.0
Initial Q Delay(d3),s/veh	0.0	0.0	0.0	0.0	0.0	0.0	0.0	0.0	0.0	0.0	0.0	0.0
%ile BackOfQ(50%),veh/ln	0.8	0.0	0.2	1.3	0.0	0.3	1.1	5.9	0.0	0.1	7.0	0.2
LnGrp Delay(d),s/veh	17.3	0.0	16.3	19.9	0.0	16.3	9.8	10.8	0.0	9.7	15.1	9.5
LnGrp LOS	B		B	B		B	A	B		A	B	A
Approach Vol, veh/h		90			122			707			599	
Approach Delay, s/veh		17.1			19.2			10.6			14.7	
Approach LOS		B			B			B			B	

Timer	1	2	3	4	5	6	7	8
Assigned Phs	1	2		4	5	6		8
Phs Duration (G+Y+Rc), s	5.4	29.5		15.0	9.5	25.4		15.0
Change Period (Y+Rc), s	5.0	6.0		5.0	5.0	6.0		5.0
Max Green Setting (Gmax), s	15.0	51.0		25.0	15.0	51.0		25.0
Max Q Clear Time (g_c+I1), s	2.2	13.3		4.5	4.2	15.1		7.8
Green Ext Time (p_c), s	0.0	4.0		0.4	0.3	4.1		0.3

Intersection Summary	
HCM 2010 Ctrl Delay	13.3
HCM 2010 LOS	B

Movement	EBL	EBT	EBR	WBL	WBT	WBR	NBL	NBT	NBR	SBL	SBT	SBR
Lane Configurations												
Traffic Volume (veh/h)	40	5	125	5	5	5	60	600	15	5	715	30
Future Volume (veh/h)	40	5	125	5	5	5	60	600	15	5	715	30
Number	7	4	14	3	8	18	5	2	12	1	6	16
Initial Q (Qb), veh	0	0	0	0	0	0	0	0	0	0	0	0
Ped-Bike Adj(A_pbT)	1.00		0.99	1.00		0.99	1.00		1.00	1.00		0.99
Parking Bus, Adj	1.00	1.00	1.00	1.00	1.00	1.00	1.00	1.00	1.00	1.00	1.00	1.00
Adj Sat Flow, veh/h/ln	1863	1863	1900	1863	1863	1863	1863	1863	1863	1863	1863	1863
Adj Flow Rate, veh/h	43	5	11	5	5	1	65	652	9	5	777	17
Adj No. of Lanes	1	1	0	1	1	1	1	1	1	1	1	1
Peak Hour Factor	0.92	0.92	0.92	0.92	0.92	0.92	0.92	0.92	0.92	0.92	0.92	0.92
Percent Heavy Veh, %	2	2	2	2	2	2	2	2	2	2	2	2
Cap, veh/h	60	63	139	9	175	147	84	1010	858	7	929	784
Arrive On Green	0.03	0.12	0.12	0.01	0.09	0.09	0.05	0.54	0.54	0.00	0.50	0.50
Sat Flow, veh/h	1774	515	1132	1774	1863	1564	1774	1863	1583	1774	1863	1572
Grp Volume(v), veh/h	43	0	16	5	5	1	65	652	9	5	777	17
Grp Sat Flow(s),veh/h/ln	1774	0	1646	1774	1863	1564	1774	1863	1583	1774	1863	1572
Q Serve(g_s), s	1.5	0.0	0.5	0.2	0.1	0.0	2.2	15.1	0.2	0.2	22.0	0.3
Cycle Q Clear(g_c), s	1.5	0.0	0.5	0.2	0.1	0.0	2.2	15.1	0.2	0.2	22.0	0.3
Prop In Lane	1.00		0.69	1.00		1.00	1.00		1.00	1.00		1.00
Lane Grp Cap(c), veh/h	60	0	202	9	175	147	84	1010	858	7	929	784
V/C Ratio(X)	0.72	0.00	0.08	0.53	0.03	0.01	0.77	0.65	0.01	0.71	0.84	0.02
Avail Cap(c_a), veh/h	578	0	563	578	637	535	723	1973	1677	723	1973	1665
HCM Platoon Ratio	1.00	1.00	1.00	1.00	1.00	1.00	1.00	1.00	1.00	1.00	1.00	1.00
Upstream Filter(I)	1.00	0.00	1.00	1.00	1.00	1.00	1.00	1.00	1.00	1.00	1.00	1.00
Uniform Delay (d), s/veh	29.4	0.0	23.9	30.4	25.3	25.2	28.9	9.9	6.5	30.5	13.2	7.8
Incr Delay (d2), s/veh	14.6	0.0	0.2	39.1	0.1	0.0	13.8	0.7	0.0	81.5	2.1	0.0
Initial Q Delay(d3),s/veh	0.0	0.0	0.0	0.0	0.0	0.0	0.0	0.0	0.0	0.0	0.0	0.0
%ile BackOfQ(50%),veh/ln	1.0	0.0	0.2	0.2	0.1	0.0	1.4	7.8	0.1	0.2	11.8	0.1
LnGrp Delay(d),s/veh	44.0	0.0	24.0	69.5	25.3	25.2	42.7	10.6	6.5	112.0	15.3	7.8
LnGrp LOS	D		C	E	C	C	D	B	A	F	B	A
Approach Vol, veh/h		59			11			726			799	
Approach Delay, s/veh		38.6			45.4			13.4			15.8	
Approach LOS		D			D			B			B	

Timer	1	2	3	4	5	6	7	8
Assigned Phs	1	2	3	4	5	6	7	8
Phs Duration (G+Y+Rc), s	5.2	38.3	5.3	12.5	7.9	35.6	7.1	10.8
Change Period (Y+Rc), s	5.0	5.0	5.0	5.0	5.0	5.0	5.0	5.0
Max Green Setting (Gmax), s	25.0	65.0	20.0	21.0	25.0	65.0	20.0	21.0
Max Q Clear Time (g_c+I1), s	2.2	17.1	2.2	2.5	4.2	24.0	3.5	2.1
Green Ext Time (p_c), s	0.0	5.1	0.0	0.0	0.1	6.6	0.1	0.0

Intersection Summary	
HCM 2010 Ctrl Delay	15.7
HCM 2010 LOS	B

Movement	EBL	EBT	EBR	WBL	WBT	WBR	NBL	NBT	NBR	SBL	SBT	SBR
Lane Configurations												
Traffic Volume (veh/h)	35	10	480	20	5	0	315	675	45	10	805	10
Future Volume (veh/h)	35	10	480	20	5	0	315	675	45	10	805	10
Number	3	8	18	7	4	14	1	6	16	5	2	12
Initial Q (Qb), veh	0	0	0	0	0	0	0	0	0	0	0	0
Ped-Bike Adj(A_pbT)	0.99		1.00	0.99		1.00	1.00		1.00	1.00		1.00
Parking Bus, Adj	1.00	1.00	1.00	1.00	1.00	1.00	1.00	1.00	1.00	1.00	1.00	1.00
Adj Sat Flow, veh/h/ln	1900	1863	1863	1900	1863	1900	1863	1863	1900	1863	1863	1863
Adj Flow Rate, veh/h	38	11	0	22	5	0	342	734	48	11	875	3
Adj No. of Lanes	0	1	1	0	1	0	1	2	0	1	2	1
Peak Hour Factor	0.92	0.92	0.92	0.92	0.92	0.92	0.92	0.92	0.92	0.92	0.92	0.92
Percent Heavy Veh, %	2	2	2	2	2	2	2	2	2	2	2	2
Cap, veh/h	195	31	117	200	31	0	411	2202	144	15	1521	680
Arrive On Green	0.09	0.07	0.00	0.09	0.07	0.00	0.23	0.65	0.65	0.01	0.43	0.43
Sat Flow, veh/h	1112	417	1583	1143	422	0	1774	3373	220	1774	3539	1583
Grp Volume(v), veh/h	49	0	0	27	0	0	342	385	397	11	875	3
Grp Sat Flow(s),veh/h/ln	1530	0	1583	1565	0	0	1774	1770	1824	1774	1770	1583
Q Serve(g_s), s	0.8	0.0	0.0	0.0	0.0	0.0	10.4	5.5	5.5	0.3	10.6	0.1
Cycle Q Clear(g_c), s	1.6	0.0	0.0	0.8	0.0	0.0	10.4	5.5	5.5	0.3	10.6	0.1
Prop In Lane	0.78		1.00	0.81		0.00	1.00		0.12	1.00		1.00
Lane Grp Cap(c), veh/h	253	0	117	258	0	0	411	1155	1190	15	1521	680
V/C Ratio(X)	0.19	0.00	0.00	0.10	0.00	0.00	0.83	0.33	0.33	0.74	0.58	0.00
Avail Cap(c_a), veh/h	667	0	560	796	0	0	2070	2315	2386	2070	4631	2072
HCM Platoon Ratio	1.00	1.00	1.00	1.00	1.00	1.00	1.00	1.00	1.00	1.00	1.00	1.00
Upstream Filter(I)	1.00	0.00	0.00	1.00	0.00	0.00	1.00	1.00	1.00	1.00	1.00	1.00
Uniform Delay (d), s/veh	24.6	0.0	0.0	24.2	0.0	0.0	20.7	4.4	4.4	28.0	12.2	9.2
Incr Delay (d2), s/veh	0.4	0.0	0.0	0.2	0.0	0.0	1.7	0.4	0.3	22.7	0.7	0.0
Initial Q Delay(d3),s/veh	0.0	0.0	0.0	0.0	0.0	0.0	0.0	0.0	0.0	0.0	0.0	0.0
%ile BackOfQ(50%),veh/ln	0.7	0.0	0.0	0.4	0.0	0.0	5.2	2.7	2.8	0.3	5.3	0.0
LnGrp Delay(d),s/veh	25.0	0.0	0.0	24.4	0.0	0.0	22.4	4.7	4.7	50.7	13.0	9.2
LnGrp LOS	C			C			C	A	A	D	B	A
Approach Vol, veh/h		49			27			1124			889	
Approach Delay, s/veh		25.0			24.4			10.1			13.4	
Approach LOS		C			C			B			B	

Timer	1	2	3	4	5	6	7	8
Assigned Phs	1	2		4	5	6		8
Phs Duration (G+Y+Rc), s	17.1	30.3		9.2	4.5	42.9		9.2
Change Period (Y+Rc), s	4.0	6.0		5.0	4.0	6.0		5.0
Max Green Setting (Gmax), s	66.0	74.0		25.0	66.0	74.0		20.0
Max Q Clear Time (g_c+I1), s	12.4	12.6		2.8	2.3	7.5		3.6
Green Ext Time (p_c), s	0.8	11.7		0.0	0.0	9.0		0.1

Intersection Summary	
HCM 2010 Ctrl Delay	12.0
HCM 2010 LOS	B

Movement	EBL	EBT	EBR	WBL	WBT	WBR	NBL	NBT	NBR	SBL	SBT	SBR
Lane Configurations												
Traffic Volume (veh/h)	30	0	70	10	5	10	135	1085	20	15	1275	65
Future Volume (veh/h)	30	0	70	10	5	10	135	1085	20	15	1275	65
Number	3	8	18	7	4	14	1	6	16	5	2	12
Initial Q (Qb), veh	0	0	0	0	0	0	0	0	0	0	0	0
Ped-Bike Adj(A_pbT)	1.00		1.00	1.00		1.00	1.00		1.00	1.00		1.00
Parking Bus, Adj	1.00	1.00	1.00	1.00	1.00	1.00	1.00	1.00	1.00	1.00	1.00	1.00
Adj Sat Flow, veh/h/ln	1900	1863	1863	1900	1863	1900	1863	1863	1900	1863	1863	1863
Adj Flow Rate, veh/h	33	0	1	11	5	1	147	1179	21	16	1386	38
Adj No. of Lanes	0	1	1	0	1	0	1	2	0	1	2	1
Peak Hour Factor	0.92	0.92	0.92	0.92	0.92	0.92	0.92	0.92	0.92	0.92	0.92	0.92
Percent Heavy Veh, %	2	2	2	2	2	2	2	2	2	2	2	2
Cap, veh/h	180	0	73	121	19	3	186	2603	46	20	2259	1011
Arrive On Green	0.06	0.00	0.05	0.06	0.05	0.05	0.10	0.73	0.73	0.01	0.64	0.64
Sat Flow, veh/h	1553	0	1583	701	414	70	1774	3558	63	1774	3539	1583
Grp Volume(v), veh/h	33	0	1	17	0	0	147	586	614	16	1386	38
Grp Sat Flow(s),veh/h/ln	1553	0	1583	1185	0	0	1774	1770	1852	1774	1770	1583
Q Serve(g_s), s	0.0	0.0	0.0	0.4	0.0	0.0	5.4	8.8	8.8	0.6	15.5	0.6
Cycle Q Clear(g_c), s	1.2	0.0	0.0	1.6	0.0	0.0	5.4	8.8	8.8	0.6	15.5	0.6
Prop In Lane	1.00		1.00	0.65		0.06	1.00		0.03	1.00		1.00
Lane Grp Cap(c), veh/h	203	0	73	162	0	0	186	1295	1355	20	2259	1011
V/C Ratio(X)	0.16	0.00	0.01	0.11	0.00	0.00	0.79	0.45	0.45	0.78	0.61	0.04
Avail Cap(c_a), veh/h	625	0	548	621	0	0	561	2292	2398	294	4050	1812
HCM Platoon Ratio	1.00	1.00	1.00	1.00	1.00	1.00	1.00	1.00	1.00	1.00	1.00	1.00
Upstream Filter(I)	1.00	0.00	1.00	1.00	0.00	0.00	1.00	1.00	1.00	1.00	1.00	1.00
Uniform Delay (d), s/veh	30.3	0.0	30.2	30.8	0.0	0.0	29.0	3.6	3.6	32.7	7.1	4.4
Incr Delay (d2), s/veh	0.1	0.0	0.0	0.1	0.0	0.0	2.8	0.5	0.5	20.7	0.6	0.0
Initial Q Delay(d3),s/veh	0.0	0.0	0.0	0.0	0.0	0.0	0.0	0.0	0.0	0.0	0.0	0.0
%ile BackOfQ(50%),veh/ln	0.6	0.0	0.0	0.3	0.0	0.0	2.8	4.4	4.6	0.4	7.5	0.3
LnGrp Delay(d),s/veh	30.4	0.0	30.3	30.9	0.0	0.0	31.8	4.1	4.1	53.5	7.7	4.5
LnGrp LOS	C		C	C			C	A	A	D	A	A
Approach Vol, veh/h		34			17			1347			1440	
Approach Delay, s/veh		30.4			30.9			7.1			8.1	
Approach LOS		C			C			A			A	

Timer	1	2	3	4	5	6	7	8
Assigned Phs	1	2		4	5	6		8
Phs Duration (G+Y+Rc), s	11.0	47.4		8.0	4.8	53.6		8.0
Change Period (Y+Rc), s	4.0	5.0		5.0	4.0	5.0		5.0
Max Green Setting (Gmax), s	21.0	76.0		23.0	11.0	86.0		23.0
Max Q Clear Time (g_c+I1), s	7.4	17.5		3.6	2.6	10.8		3.2
Green Ext Time (p_c), s	0.1	24.9		0.0	0.0	18.3		0.0

Intersection Summary	
HCM 2010 Ctrl Delay	8.1
HCM 2010 LOS	A

Movement	EBL	EBT	EBR	WBL	WBT	WBR	NBL	NBT	NBR	SBL	SBT	SBR
Lane Configurations												
Traffic Volume (veh/h)	55	5	35	40	15	45	110	1225	60	25	1225	45
Future Volume (veh/h)	55	5	35	40	15	45	110	1225	60	25	1225	45
Number	3	8	18	7	4	14	1	6	16	5	2	12
Initial Q (Qb), veh	0	0	0	0	0	0	0	0	0	0	0	0
Ped-Bike Adj(A_pbT)	1.00		1.00	1.00		1.00	1.00		1.00	1.00		1.00
Parking Bus, Adj	1.00	1.00	1.00	1.00	1.00	1.00	1.00	1.00	1.00	1.00	1.00	1.00
Adj Sat Flow, veh/h/ln	1900	1863	1863	1863	1863	1900	1863	1863	1863	1863	1863	1863
Adj Flow Rate, veh/h	60	5	1	43	16	1	120	1332	50	27	1332	35
Adj No. of Lanes	0	1	1	1	1	0	1	2	1	1	2	1
Peak Hour Factor	0.92	0.92	0.92	0.92	0.92	0.92	0.92	0.92	0.92	0.92	0.92	0.92
Percent Heavy Veh, %	2	2	2	2	2	2	2	2	2	2	2	2
Cap, veh/h	160	12	153	111	168	10	142	2776	1242	39	2571	1150
Arrive On Green	0.10	0.10	0.10	0.10	0.10	0.10	0.08	0.78	0.78	0.02	0.73	0.73
Sat Flow, veh/h	1193	120	1578	1401	1735	108	1774	3539	1583	1774	3539	1583
Grp Volume(v), veh/h	65	0	1	43	0	17	120	1332	50	27	1332	35
Grp Sat Flow(s),veh/h/ln	1313	0	1578	1401	0	1843	1774	1770	1583	1774	1770	1583
Q Serve(g_s), s	6.6	0.0	0.1	4.7	0.0	1.3	10.3	20.2	1.1	2.3	25.6	1.0
Cycle Q Clear(g_c), s	7.9	0.0	0.1	12.5	0.0	1.3	10.3	20.2	1.1	2.3	25.6	1.0
Prop In Lane	0.92		1.00	1.00		0.06	1.00		1.00	1.00		1.00
Lane Grp Cap(c), veh/h	172	0	153	111	0	178	142	2776	1242	39	2571	1150
V/C Ratio(X)	0.38	0.00	0.01	0.39	0.00	0.10	0.85	0.48	0.04	0.69	0.52	0.03
Avail Cap(c_a), veh/h	254	0	244	192	0	285	240	2776	1242	240	2571	1150
HCM Platoon Ratio	1.00	1.00	1.00	1.00	1.00	1.00	1.00	1.00	1.00	1.00	1.00	1.00
Upstream Filter(I)	1.00	0.00	1.00	1.00	0.00	1.00	0.71	0.71	0.71	1.00	1.00	1.00
Uniform Delay (d), s/veh	67.3	0.0	63.3	72.8	0.0	63.8	70.4	5.8	3.7	75.2	9.3	5.9
Incr Delay (d2), s/veh	1.4	0.0	0.0	2.2	0.0	0.2	3.8	0.4	0.0	7.6	0.7	0.0
Initial Q Delay(d3),s/veh	0.0	0.0	0.0	0.0	0.0	0.0	0.0	0.0	0.0	0.0	0.0	0.0
%ile BackOfQ(50%),veh/ln	2.7	0.0	0.0	1.9	0.0	0.7	5.2	10.0	0.5	1.2	12.7	0.4
LnGrp Delay(d),s/veh	68.7	0.0	63.3	75.0	0.0	64.1	74.1	6.2	3.8	82.9	10.0	6.0
LnGrp LOS	E		E	E		E	E	A	A	F	B	A
Approach Vol, veh/h		66			60			1502			1394	
Approach Delay, s/veh		68.6			71.9			11.5			11.3	
Approach LOS		E			E			B			B	

Timer	1	2	3	4	5	6	7	8
Assigned Phs	1	2		4	5	6		8
Phs Duration (G+Y+Rc), s	16.4	118.6		20.0	7.4	127.6		20.0
Change Period (Y+Rc), s	4.0	6.0		5.0	4.0	6.0		5.0
Max Green Setting (Gmax), s	21.0	95.0		24.0	21.0	95.0		24.0
Max Q Clear Time (g_c+I1), s	12.3	27.6		14.5	4.3	22.2		9.9
Green Ext Time (p_c), s	0.1	24.4		0.1	0.0	25.2		0.1

Intersection Summary	
HCM 2010 Ctrl Delay	13.9
HCM 2010 LOS	B

Movement	EBL	EBT	EBR	WBL	WBT	WBR	NBL	NBT	NBR	SBL	SBT	SBR
Lane Configurations												
Traffic Volume (veh/h)	135	10	220	10	10	10	425	1310	15	80	1185	95
Future Volume (veh/h)	135	10	220	10	10	10	425	1310	15	80	1185	95
Number	3	8	18	7	4	14	1	6	16	5	2	12
Initial Q (Qb), veh	0	0	0	0	0	0	0	0	0	0	0	0
Ped-Bike Adj(A_pbT)	1.00		0.97	1.00		0.98	1.00		1.00	1.00		1.00
Parking Bus, Adj	1.00	1.00	1.00	1.00	1.00	1.00	1.00	1.00	1.00	1.00	1.00	1.00
Adj Sat Flow, veh/h/ln	1863	1863	1863	1900	1863	1900	1863	1863	1900	1863	1863	1863
Adj Flow Rate, veh/h	155	0	64	11	11	4	462	1424	16	87	1288	73
Adj No. of Lanes	2	0	2	0	1	0	2	2	0	1	2	1
Peak Hour Factor	0.92	0.92	0.92	0.92	0.92	0.92	0.92	0.92	0.92	0.92	0.92	0.92
Percent Heavy Veh, %	2	2	2	2	2	2	2	2	2	2	2	2
Cap, veh/h	341	0	832	61	61	22	616	2079	23	154	1726	906
Arrive On Green	0.10	0.00	0.09	0.08	0.08	0.05	0.18	0.58	0.56	0.09	0.49	0.49
Sat Flow, veh/h	3548	0	3075	749	749	272	3442	3585	40	1774	3539	1577
Grp Volume(v), veh/h	155	0	64	26	0	0	462	703	737	87	1288	73
Grp Sat Flow(s),veh/h/ln	1774	0	1537	1770	0	0	1721	1770	1856	1774	1770	1577
Q Serve(g_s), s	4.2	0.0	1.6	1.4	0.0	0.0	13.1	28.4	28.4	4.8	30.1	2.1
Cycle Q Clear(g_c), s	4.2	0.0	1.6	1.4	0.0	0.0	13.1	28.4	28.4	4.8	30.1	2.1
Prop In Lane	1.00		1.00	0.42		0.15	1.00		0.02	1.00		1.00
Lane Grp Cap(c), veh/h	341	0	832	144	0	0	616	1026	1076	154	1726	906
V/C Ratio(X)	0.46	0.00	0.08	0.18	0.00	0.00	0.75	0.68	0.69	0.57	0.75	0.08
Avail Cap(c_a), veh/h	1176	0	1555	535	0	0	1945	3346	3509	259	5208	2458
HCM Platoon Ratio	1.00	1.00	1.00	1.00	1.00	1.00	1.00	1.00	1.00	1.00	1.00	1.00
Upstream Filter(I)	1.00	0.00	1.00	1.00	0.00	0.00	1.00	1.00	1.00	1.00	1.00	1.00
Uniform Delay (d), s/veh	43.8	0.0	28.3	44.1	0.0	0.0	40.0	15.0	15.0	45.0	21.2	9.8
Incr Delay (d2), s/veh	0.4	0.0	0.0	0.6	0.0	0.0	0.7	1.2	1.1	1.2	0.9	0.1
Initial Q Delay(d3),s/veh	0.0	0.0	0.0	0.0	0.0	0.0	0.0	0.0	0.0	0.0	0.0	0.0
%ile BackOfQ(50%),veh/ln	2.1	0.0	0.7	0.7	0.0	0.0	6.3	14.0	14.9	2.4	14.9	1.1
LnGrp Delay(d),s/veh	44.2	0.0	28.3	44.7	0.0	0.0	40.7	16.2	16.2	46.2	22.1	9.8
LnGrp LOS	D		C	D			D	B	B	D	C	A
Approach Vol, veh/h		219			26			1902			1448	
Approach Delay, s/veh		39.6			44.7			22.1			22.9	
Approach LOS		D			D			C			C	

Timer	1	2	3	4	5	6	7	8
Assigned Phs	1	2		4	5	6		8
Phs Duration (G+Y+Rc), s	22.4	54.0		12.4	12.9	63.5		13.8
Change Period (Y+Rc), s	6.0	6.0		7.0	6.0	6.0		7.0
Max Green Setting (Gmax), s	56.0	149.0		28.0	13.0	192.0		31.0
Max Q Clear Time (g_c+I1), s	15.1	32.1		3.4	6.8	30.4		6.2
Green Ext Time (p_c), s	1.3	16.0		0.1	0.1	16.4		0.6

Intersection Summary	
HCM 2010 Ctrl Delay	23.7
HCM 2010 LOS	C

Notes

Movement	EBL	EBT	EBR	WBL	WBT	WBR	NBL	NBT	NBR	SBL	SBT	SBR
Lane Configurations												
Traffic Volume (veh/h)	5	5	5	60	0	45	5	1745	90	30	1385	5
Future Volume (veh/h)	5	5	5	60	0	45	5	1745	90	30	1385	5
Number	3	8	18	7	4	14	1	6	16	5	2	12
Initial Q (Qb), veh	0	0	0	0	0	0	0	0	0	0	0	0
Ped-Bike Adj(A_pbT)	0.98		0.97	0.98		0.97	1.00		1.00	1.00		1.00
Parking Bus, Adj	1.00	1.00	1.00	1.00	1.00	1.00	1.00	1.00	1.00	1.00	1.00	1.00
Adj Sat Flow, veh/h/ln	1900	1863	1900	1863	1863	1900	1863	1863	1900	1863	1863	1900
Adj Flow Rate, veh/h	5	5	1	65	0	1	5	1897	96	33	1505	5
Adj No. of Lanes	0	1	0	1	1	0	1	2	0	1	2	0
Peak Hour Factor	0.92	0.92	0.92	0.92	0.92	0.92	0.92	0.92	0.92	0.92	0.92	0.92
Percent Heavy Veh, %	2	2	2	2	2	2	2	2	2	2	2	2
Cap, veh/h	90	80	13	176	0	138	11	2706	136	63	2961	10
Arrive On Green	0.09	0.09	0.08	0.09	0.00	0.08	0.01	0.79	0.78	0.04	0.82	0.81
Sat Flow, veh/h	584	895	148	1372	0	1543	1774	3429	172	1774	3618	12
Grp Volume(v), veh/h	11	0	0	65	0	1	5	971	1022	33	736	774
Grp Sat Flow(s),veh/h/ln	1627	0	0	1372	0	1543	1774	1770	1832	1774	1770	1861
Q Serve(g_s), s	0.0	0.0	0.0	5.4	0.0	0.1	0.4	35.9	37.3	2.6	18.1	18.1
Cycle Q Clear(g_c), s	0.8	0.0	0.0	6.1	0.0	0.1	0.4	35.9	37.3	2.6	18.1	18.1
Prop In Lane	0.45		0.09	1.00		1.00	1.00		0.09	1.00		0.01
Lane Grp Cap(c), veh/h	183	0	0	176	0	138	11	1396	1446	63	1448	1523
V/C Ratio(X)	0.06	0.00	0.00	0.37	0.00	0.01	0.45	0.70	0.71	0.52	0.51	0.51
Avail Cap(c_a), veh/h	312	0	0	289	0	265	101	1396	1446	101	1448	1523
HCM Platoon Ratio	1.00	1.00	1.00	1.00	1.00	1.00	1.00	1.00	1.00	1.00	1.00	1.00
Upstream Filter(I)	1.00	0.00	0.00	1.00	0.00	1.00	0.64	0.64	0.64	1.00	1.00	1.00
Uniform Delay (d), s/veh	58.4	0.0	0.0	60.7	0.0	58.5	69.3	6.9	7.1	66.3	3.9	4.0
Incr Delay (d2), s/veh	0.1	0.0	0.0	1.3	0.0	0.0	6.5	1.9	1.9	2.5	1.3	1.2
Initial Q Delay(d3),s/veh	0.0	0.0	0.0	0.0	0.0	0.0	0.0	0.0	0.0	0.0	0.0	0.0
%ile BackOfQ(50%),veh/ln	0.4	0.0	0.0	2.5	0.0	0.0	0.2	18.0	19.2	1.3	9.1	9.5
LnGrp Delay(d),s/veh	58.6	0.0	0.0	62.0	0.0	58.6	75.8	8.8	9.0	68.8	5.2	5.2
LnGrp LOS	E			E		E	E	A	A	E	A	A
Approach Vol, veh/h		11			66			1998			1543	
Approach Delay, s/veh		58.6			62.0			9.0			6.6	
Approach LOS		E			E			A			A	

Timer	1	2	3	4	5	6	7	8
Assigned Phs	1	2		4	5	6		8
Phs Duration (G+Y+Rc), s	4.9	118.6		16.5	9.0	114.5		16.5
Change Period (Y+Rc), s	4.0	5.0		5.0	4.0	5.0		5.0
Max Green Setting (Gmax), s	8.0	95.0		23.0	8.0	95.0		23.0
Max Q Clear Time (g_c+I1), s	2.4	20.1		8.1	4.6	39.3		2.8
Green Ext Time (p_c), s	0.0	29.0		0.1	0.0	41.2		0.0

Intersection Summary	
HCM 2010 Ctrl Delay	9.1
HCM 2010 LOS	A

Movement	EBL	EBT	EBR	WBL	WBT	WBR	NBL	NBT	NBR	SBL	SBT	SBR
Lane Configurations												
Traffic Volume (veh/h)	90	5	5	105	15	15	5	1725	20	10	1230	185
Future Volume (veh/h)	90	5	5	105	15	15	5	1725	20	10	1230	185
Number	3	8	18	7	4	14	1	6	16	5	2	12
Initial Q (Qb), veh	0	0	0	0	0	0	0	0	0	0	0	0
Ped-Bike Adj(A_pbT)	1.00		1.00	1.00		1.00	1.00		1.00	1.00		1.00
Parking Bus, Adj	1.00	1.00	1.00	1.00	1.00	1.00	1.00	1.00	1.00	1.00	1.00	1.00
Adj Sat Flow, veh/h/ln	1900	1863	1900	1900	1863	1900	1863	1863	1900	1863	1863	1863
Adj Flow Rate, veh/h	98	5	3	114	16	12	5	1875	21	11	1337	141
Adj No. of Lanes	0	1	0	0	1	0	1	2	0	1	2	1
Peak Hour Factor	0.92	0.92	0.92	0.92	0.92	0.92	0.92	0.92	0.92	0.92	0.92	0.92
Percent Heavy Veh, %	2	2	2	2	2	2	2	2	2	2	2	2
Cap, veh/h	210	8	5	198	20	15	7	2805	31	14	2782	1243
Arrive On Green	0.11	0.11	0.10	0.11	0.11	0.10	0.00	0.78	0.77	0.01	0.79	0.79
Sat Flow, veh/h	1387	71	42	1312	184	138	1774	3585	40	1774	3539	1581
Grp Volume(v), veh/h	106	0	0	142	0	0	5	924	972	11	1337	141
Grp Sat Flow(s),veh/h/ln	1500	0	0	1634	0	0	1774	1770	1856	1774	1770	1581
Q Serve(g_s), s	0.0	0.0	0.0	1.8	0.0	0.0	0.3	28.5	28.8	0.7	15.6	2.5
Cycle Q Clear(g_c), s	7.9	0.0	0.0	9.8	0.0	0.0	0.3	28.5	28.8	0.7	15.6	2.5
Prop In Lane	0.92		0.03	0.80		0.08	1.00		0.02	1.00		1.00
Lane Grp Cap(c), veh/h	223	0	0	234	0	0	7	1384	1452	14	2782	1243
V/C Ratio(X)	0.48	0.00	0.00	0.61	0.00	0.00	0.73	0.67	0.67	0.81	0.48	0.11
Avail Cap(c_a), veh/h	430	0	0	450	0	0	118	1384	1452	118	2782	1243
HCM Platoon Ratio	1.00	1.00	1.00	1.00	1.00	1.00	1.00	1.00	1.00	1.00	1.00	1.00
Upstream Filter(I)	1.00	0.00	0.00	1.00	0.00	0.00	0.64	0.64	0.64	0.86	0.86	0.86
Uniform Delay (d), s/veh	51.1	0.0	0.0	51.8	0.0	0.0	59.7	5.9	6.0	59.5	4.4	3.0
Incr Delay (d2), s/veh	1.6	0.0	0.0	2.5	0.0	0.0	30.1	1.7	1.6	28.7	0.5	0.2
Initial Q Delay(d3),s/veh	0.0	0.0	0.0	0.0	0.0	0.0	0.0	0.0	0.0	0.0	0.0	0.0
%ile BackOfQ(50%),veh/ln	3.5	0.0	0.0	4.7	0.0	0.0	0.2	14.2	15.0	0.5	7.6	1.2
LnGrp Delay(d),s/veh	52.6	0.0	0.0	54.3	0.0	0.0	89.8	7.6	7.6	88.2	4.9	3.2
LnGrp LOS	D			D			F	A	A	F	A	A
Approach Vol, veh/h		106			142			1901			1489	
Approach Delay, s/veh		52.6			54.3			7.8			5.4	
Approach LOS		D			D			A			A	

Timer	1	2	3	4	5	6	7	8
Assigned Phs	1	2		4	5	6		8
Phs Duration (G+Y+Rc), s	4.5	98.3		17.2	4.9	97.9		17.2
Change Period (Y+Rc), s	4.0	5.0		5.0	4.0	5.0		5.0
Max Green Setting (Gmax), s	8.0	68.0		30.0	8.0	68.0		30.0
Max Q Clear Time (g_c+I1), s	2.3	17.6		11.8	2.7	30.8		9.9
Green Ext Time (p_c), s	0.0	31.2		0.5	0.0	32.5		0.3

Intersection Summary	
HCM 2010 Ctrl Delay	9.9
HCM 2010 LOS	A

Movement	EBL	EBT	EBR	WBL	WBT	WBR	NBL	NBT	NBR	SBL	SBT	SBR
Lane Configurations												
Traffic Volume (veh/h)	145	30	20	145	25	35	25	1550	75	10	1270	70
Future Volume (veh/h)	145	30	20	145	25	35	25	1550	75	10	1270	70
Number	3	8	18	7	4	14	1	6	16	5	2	12
Initial Q (Qb), veh	0	0	0	0	0	0	0	0	0	0	0	0
Ped-Bike Adj(A_pbT)	0.99		0.98	0.99		0.98	1.00		1.00	1.00		1.00
Parking Bus, Adj	1.00	1.00	1.00	1.00	1.00	1.00	1.00	1.00	1.00	1.00	1.00	1.00
Adj Sat Flow, veh/h/ln	1900	1863	1863	1863	1863	1900	1863	1863	1900	1863	1863	1900
Adj Flow Rate, veh/h	158	33	2	158	27	5	27	1685	80	11	1380	73
Adj No. of Lanes	0	1	1	1	1	0	1	2	0	1	2	0
Peak Hour Factor	0.92	0.92	0.92	0.92	0.92	0.92	0.92	0.92	0.92	0.92	0.92	0.92
Percent Heavy Veh, %	2	2	2	2	2	2	2	2	2	2	2	2
Cap, veh/h	229	38	265	307	259	48	34	2536	120	13	2480	131
Arrive On Green	0.17	0.17	0.17	0.17	0.17	0.16	0.04	1.00	1.00	0.01	0.73	0.72
Sat Flow, veh/h	1070	224	1558	1358	1525	282	1774	3441	163	1774	3420	181
Grp Volume(v), veh/h	191	0	2	158	0	32	27	862	903	11	713	740
Grp Sat Flow(s),veh/h/ln	1294	0	1558	1358	0	1807	1774	1770	1834	1774	1770	1831
Q Serve(g_s), s	18.4	0.0	0.1	0.0	0.0	2.1	2.1	0.0	0.0	0.9	25.9	26.2
Cycle Q Clear(g_c), s	20.5	0.0	0.1	13.4	0.0	2.1	2.1	0.0	0.0	0.9	25.9	26.2
Prop In Lane	0.83		1.00	1.00		0.16	1.00		0.09	1.00		0.10
Lane Grp Cap(c), veh/h	267	0	265	307	0	307	34	1304	1352	13	1283	1328
V/C Ratio(X)	0.72	0.00	0.01	0.51	0.00	0.10	0.79	0.66	0.67	0.83	0.56	0.56
Avail Cap(c_a), veh/h	310	0	312	348	0	361	139	1304	1352	139	1283	1328
HCM Platoon Ratio	1.00	1.00	1.00	1.00	1.00	1.00	2.00	2.00	2.00	1.00	1.00	1.00
Upstream Filter(I)	1.00	0.00	1.00	1.00	0.00	1.00	0.50	0.50	0.50	0.86	0.86	0.86
Uniform Delay (d), s/veh	57.8	0.0	48.3	53.8	0.0	49.2	67.0	0.0	0.0	69.4	8.8	8.9
Incr Delay (d2), s/veh	6.5	0.0	0.0	1.3	0.0	0.1	7.6	1.3	1.3	32.4	1.5	1.5
Initial Q Delay(d3),s/veh	0.0	0.0	0.0	0.0	0.0	0.0	0.0	0.0	0.0	0.0	0.0	0.0
%ile BackOfQ(50%),veh/ln	7.7	0.0	0.1	5.8	0.0	1.1	1.1	0.5	0.5	0.5	13.0	13.7
LnGrp Delay(d),s/veh	64.2	0.0	48.3	55.1	0.0	49.3	74.7	1.3	1.3	101.8	10.3	10.4
LnGrp LOS	E		D	E		D	E	A	A	F	B	B
Approach Vol, veh/h		193			190			1792			1464	
Approach Delay, s/veh		64.1			54.2			2.4			11.0	
Approach LOS		E			D			A			B	

Timer	1	2	3	4	5	6	7	8
Assigned Phs	1	2		4	5	6		8
Phs Duration (G+Y+Rc), s	6.7	105.5		27.8	5.0	107.2		27.8
Change Period (Y+Rc), s	4.0	5.0		5.0	4.0	5.0		5.0
Max Green Setting (Gmax), s	11.0	88.0		27.0	11.0	88.0		27.0
Max Q Clear Time (g_c+I1), s	4.1	28.2		15.4	2.9	2.0		22.5
Green Ext Time (p_c), s	0.0	25.1		0.5	0.0	43.0		0.3

Intersection Summary	
HCM 2010 Ctrl Delay	11.9
HCM 2010 LOS	B

Movement	EBL	EBT	EBR	WBL	WBT	WBR	NBL	NBT	NBR	SBL	SBT	SBR
Lane Configurations												
Traffic Volume (veh/h)	15	110	35	95	75	715	25	865	120	515	860	20
Future Volume (veh/h)	15	110	35	95	75	715	25	865	120	515	860	20
Number	7	4	14	3	8	18	1	6	16	5	2	12
Initial Q (Qb), veh	0	0	0	0	0	0	0	0	0	0	0	0
Ped-Bike Adj(A_pbT)	0.99		0.99	0.99		0.99	1.00		1.00	1.00		1.00
Parking Bus, Adj	1.00	1.00	1.00	1.00	1.00	1.00	1.00	1.00	1.00	1.00	1.00	1.00
Adj Sat Flow, veh/h/ln	1900	1863	1863	1863	1863	1863	1863	1863	1863	1863	1863	1900
Adj Flow Rate, veh/h	16	120	5	103	82	439	27	940	53	560	935	21
Adj No. of Lanes	0	1	1	1	1	1	1	2	1	2	2	0
Peak Hour Factor	0.92	0.92	0.92	0.92	0.92	0.92	0.92	0.92	0.92	0.92	0.92	0.92
Percent Heavy Veh, %	2	2	2	2	2	2	2	2	2	2	2	2
Cap, veh/h	52	341	328	353	567	478	34	1527	680	614	2090	47
Arrive On Green	0.21	0.21	0.21	0.07	0.30	0.30	0.02	0.43	0.43	0.36	1.00	1.00
Sat Flow, veh/h	110	1627	1563	1774	1863	1569	1774	3539	1576	3442	3539	79
Grp Volume(v), veh/h	136	0	5	103	82	439	27	940	53	560	468	488
Grp Sat Flow(s),veh/h/ln	1737	0	1563	1774	1863	1569	1774	1770	1576	1721	1770	1849
Q Serve(g_s), s	0.0	0.0	0.4	6.1	4.5	37.8	2.1	28.8	2.8	21.7	0.0	0.0
Cycle Q Clear(g_c), s	8.7	0.0	0.4	6.1	4.5	37.8	2.1	28.8	2.8	21.7	0.0	0.0
Prop In Lane	0.12		1.00	1.00		1.00	1.00		1.00	1.00		0.04
Lane Grp Cap(c), veh/h	393	0	328	353	567	478	34	1527	680	614	1045	1092
V/C Ratio(X)	0.35	0.00	0.02	0.29	0.14	0.92	0.79	0.62	0.08	0.91	0.45	0.45
Avail Cap(c_a), veh/h	393	0	328	528	665	560	177	1527	680	836	1045	1092
HCM Platoon Ratio	1.00	1.00	1.00	1.00	1.00	1.00	1.00	1.00	1.00	2.00	2.00	2.00
Upstream Filter(I)	1.00	0.00	1.00	1.00	1.00	1.00	0.79	0.79	0.79	0.74	0.74	0.74
Uniform Delay (d), s/veh	47.1	0.0	43.8	37.9	35.4	47.0	68.4	30.8	23.4	44.0	0.0	0.0
Incr Delay (d2), s/veh	0.5	0.0	0.0	0.5	0.1	18.7	11.4	1.5	0.2	7.4	1.0	1.0
Initial Q Delay(d3),s/veh	0.0	0.0	0.0	0.0	0.0	0.0	0.0	0.0	0.0	0.0	0.0	0.0
%ile BackOfQ(50%),veh/ln	4.6	0.0	0.2	3.0	2.3	18.9	1.2	14.4	1.2	10.9	0.3	0.3
LnGrp Delay(d),s/veh	47.7	0.0	43.9	38.3	35.5	65.7	79.8	32.3	23.6	51.4	1.0	1.0
LnGrp LOS	D		D	D	D	E	E	C	C	D	A	A
Approach Vol, veh/h		141			624			1020			1516	
Approach Delay, s/veh		47.5			57.2			33.1			19.6	
Approach LOS		D			E			C			B	

Timer	1	2	3	4	5	6	7	8
Assigned Phs	1	2	3	4	5	6		8
Phs Duration (G+Y+Rc), s	6.7	86.7	13.2	33.4	29.0	64.4		46.6
Change Period (Y+Rc), s	4.0	5.0	5.0	5.0	4.0	5.0		5.0
Max Green Setting (Gmax), s	14.0	63.0	22.0	22.0	34.0	43.0		49.0
Max Q Clear Time (g_c+I1), s	4.1	2.0	8.1	10.7	23.7	30.8		39.8
Green Ext Time (p_c), s	0.0	12.0	0.3	0.4	1.2	6.8		1.8

Intersection Summary	
HCM 2010 Ctrl Delay	32.1
HCM 2010 LOS	C

Notes

APPENDIX C

LEVEL OF SERVICE CALCULATIONS

- Base Year 2022 with Mitigation PM Peak

HCM 2010 Signalized Intersection Summary
1: Napilihau Street

08/09/2017

Movement	EBL	EBT	EBR	WBL	WBT	WBR	NBL	NBT	NBR	SBL	SBT	SBR
Lane Configurations												
Traffic Volume (veh/h)	55	25	370	60	25	5	380	215	65	10	280	75
Future Volume (veh/h)	55	25	370	60	25	5	380	215	65	10	280	75
Number	7	4	14	3	8	18	5	2	12	1	6	16
Initial Q (Qb), veh	0	0	0	0	0	0	0	0	0	0	0	0
Ped-Bike Adj(A_pbT)	1.00		1.00	1.00		1.00	1.00		1.00	1.00		1.00
Parking Bus, Adj	1.00	1.00	1.00	1.00	1.00	1.00	1.00	1.00	1.00	1.00	1.00	1.00
Adj Sat Flow, veh/h/ln	1900	1863	1863	1863	1863	1900	1863	1863	1863	1863	1863	1863
Adj Flow Rate, veh/h	60	27	24	65	27	1	413	234	45	11	304	20
Adj No. of Lanes	0	1	1	1	1	0	1	1	1	1	1	1
Peak Hour Factor	0.92	0.92	0.92	0.92	0.92	0.92	0.92	0.92	0.92	0.92	0.92	0.92
Percent Heavy Veh, %	2	2	2	2	2	2	2	2	2	2	2	2
Cap, veh/h	232	72	184	236	207	8	501	1013	861	15	503	428
Arrive On Green	0.12	0.12	0.12	0.12	0.12	0.12	0.28	0.54	0.54	0.01	0.27	0.27
Sat Flow, veh/h	912	622	1583	1348	1785	66	1774	1863	1583	1774	1863	1583
Grp Volume(v), veh/h	87	0	24	65	0	28	413	234	45	11	304	20
Grp Sat Flow(s),veh/h/ln	1534	0	1583	1348	0	1851	1774	1863	1583	1774	1863	1583
Q Serve(g_s), s	1.8	0.0	0.7	2.3	0.0	0.7	10.5	3.2	0.6	0.3	6.9	0.5
Cycle Q Clear(g_c), s	2.5	0.0	0.7	4.8	0.0	0.7	10.5	3.2	0.6	0.3	6.9	0.5
Prop In Lane	0.69		1.00	1.00		0.04	1.00		1.00	1.00		1.00
Lane Grp Cap(c), veh/h	304	0	184	236	0	215	501	1013	861	15	503	428
V/C Ratio(X)	0.29	0.00	0.13	0.28	0.00	0.13	0.82	0.23	0.05	0.73	0.60	0.05
Avail Cap(c_a), veh/h	874	0	787	749	0	920	1102	3046	2590	551	2468	2098
HCM Platoon Ratio	1.00	1.00	1.00	1.00	1.00	1.00	1.00	1.00	1.00	1.00	1.00	1.00
Upstream Filter(I)	1.00	0.00	1.00	1.00	0.00	1.00	1.00	1.00	1.00	1.00	1.00	1.00
Uniform Delay (d), s/veh	19.9	0.0	19.2	22.2	0.0	19.2	16.2	5.7	5.2	23.9	15.4	13.0
Incr Delay (d2), s/veh	0.5	0.0	0.3	0.6	0.0	0.3	3.5	0.2	0.1	49.1	2.5	0.1
Initial Q Delay(d3),s/veh	0.0	0.0	0.0	0.0	0.0	0.0	0.0	0.0	0.0	0.0	0.0	0.0
%ile BackOfQ(50%),veh/ln	1.1	0.0	0.3	0.9	0.0	0.4	5.5	1.7	0.3	0.3	3.8	0.2
LnGrp Delay(d),s/veh	20.4	0.0	19.5	22.8	0.0	19.4	19.7	6.0	5.2	73.0	17.9	13.1
LnGrp LOS	C		B	C		B	B	A	A	E	B	B
Approach Vol, veh/h		111			93			692			335	
Approach Delay, s/veh		20.2			21.8			14.1			19.4	
Approach LOS		C			C			B			B	

Timer	1	2	3	4	5	6	7	8
Assigned Phs	1	2		4	5	6		8
Phs Duration (G+Y+Rc), s	5.4	32.3		10.6	18.6	19.0		10.6
Change Period (Y+Rc), s	5.0	6.0		5.0	5.0	6.0		5.0
Max Green Setting (Gmax), s	15.0	79.0		24.0	30.0	64.0		24.0
Max Q Clear Time (g_c+I1), s	2.3	5.2		4.5	12.5	8.9		6.8
Green Ext Time (p_c), s	0.0	3.4		0.5	1.2	4.2		0.2

Intersection Summary	
HCM 2010 Ctrl Delay	16.7
HCM 2010 LOS	B

Movement	EBL	EBT	EBR	WBL	WBT	WBR	NBL	NBT	NBR	SBL	SBT	SBR
Lane Configurations												
Traffic Volume (veh/h)	75	20	150	45	15	10	195	585	45	25	570	80
Future Volume (veh/h)	75	20	150	45	15	10	195	585	45	25	570	80
Number	7	4	14	3	8	18	5	2	12	1	6	16
Initial Q (Qb), veh	0	0	0	0	0	0	0	0	0	0	0	0
Ped-Bike Adj(A_pbT)	1.00		1.00	1.00		1.00	1.00		1.00	1.00		1.00
Parking Bus, Adj	1.00	1.00	1.00	1.00	1.00	1.00	1.00	1.00	1.00	1.00	1.00	1.00
Adj Sat Flow, veh/h/ln	1900	1863	1863	1863	1863	1900	1863	1863	1863	1863	1863	1863
Adj Flow Rate, veh/h	82	22	14	49	16	1	212	636	0	27	620	44
Adj No. of Lanes	0	1	1	1	1	0	1	1	1	1	1	1
Peak Hour Factor	0.92	0.92	0.92	0.92	0.92	0.92	0.92	0.92	0.92	0.92	0.92	0.92
Percent Heavy Veh, %	2	2	2	2	2	2	2	2	2	2	2	2
Cap, veh/h	275	55	207	243	227	14	447	960	816	392	802	679
Arrive On Green	0.13	0.13	0.13	0.13	0.13	0.13	0.10	0.52	0.00	0.02	0.43	0.43
Sat Flow, veh/h	1075	422	1583	1367	1735	108	1774	1863	1583	1774	1863	1576
Grp Volume(v), veh/h	104	0	14	49	0	17	212	636	0	27	620	44
Grp Sat Flow(s),veh/h/ln	1497	0	1583	1367	0	1844	1774	1863	1583	1774	1863	1576
Q Serve(g_s), s	2.6	0.0	0.4	1.7	0.0	0.4	2.9	12.0	0.0	0.4	13.6	0.8
Cycle Q Clear(g_c), s	3.0	0.0	0.4	4.7	0.0	0.4	2.9	12.0	0.0	0.4	13.6	0.8
Prop In Lane	0.79		1.00	1.00		0.06	1.00		1.00	1.00		1.00
Lane Grp Cap(c), veh/h	330	0	207	243	0	241	447	960	816	392	802	679
V/C Ratio(X)	0.31	0.00	0.07	0.20	0.00	0.07	0.47	0.66	0.00	0.07	0.77	0.06
Avail Cap(c_a), veh/h	907	0	828	779	0	964	820	1988	1689	916	1988	1682
HCM Platoon Ratio	1.00	1.00	1.00	1.00	1.00	1.00	1.00	1.00	1.00	1.00	1.00	1.00
Upstream Filter(I)	1.00	0.00	1.00	1.00	0.00	1.00	1.00	1.00	0.00	1.00	1.00	1.00
Uniform Delay (d), s/veh	19.3	0.0	18.2	21.6	0.0	18.2	8.4	8.5	0.0	8.0	11.6	8.0
Incr Delay (d2), s/veh	0.5	0.0	0.1	0.4	0.0	0.1	0.8	0.8	0.0	0.1	1.6	0.0
Initial Q Delay(d3),s/veh	0.0	0.0	0.0	0.0	0.0	0.0	0.0	0.0	0.0	0.0	0.0	0.0
%ile BackOfQ(50%),veh/ln	1.3	0.0	0.2	0.7	0.0	0.2	1.5	6.2	0.0	0.2	7.3	0.3
LnGrp Delay(d),s/veh	19.9	0.0	18.4	22.0	0.0	18.3	9.2	9.3	0.0	8.1	13.2	8.0
LnGrp LOS	B		B	C		B	A	A		A	B	A
Approach Vol, veh/h		118			66			848			691	
Approach Delay, s/veh		19.7			21.0			9.3			12.7	
Approach LOS		B			C			A			B	

Timer	1	2	3	4	5	6	7	8
Assigned Phs	1	2		4	5	6		8
Phs Duration (G+Y+Rc), s	5.9	30.6		11.2	10.0	26.6		11.2
Change Period (Y+Rc), s	5.0	6.0		5.0	5.0	6.0		5.0
Max Green Setting (Gmax), s	15.0	51.0		25.0	15.0	51.0		25.0
Max Q Clear Time (g_c+I1), s	2.4	14.0		5.0	4.9	15.6		6.7
Green Ext Time (p_c), s	0.0	4.7		0.5	0.4	4.7		0.2

Intersection Summary	
HCM 2010 Ctrl Delay	11.8
HCM 2010 LOS	B

Movement	EBL	EBT	EBR	WBL	WBT	WBR	NBL	NBT	NBR	SBL	SBT	SBR
Lane Configurations												
Traffic Volume (veh/h)	60	5	95	10	5	10	165	815	10	5	765	75
Future Volume (veh/h)	60	5	95	10	5	10	165	815	10	5	765	75
Number	7	4	14	3	8	18	5	2	12	1	6	16
Initial Q (Qb), veh	0	0	0	0	0	0	0	0	0	0	0	0
Ped-Bike Adj(A_pbT)	1.00		0.97	1.00		0.97	1.00		1.00	1.00		1.00
Parking Bus, Adj	1.00	1.00	1.00	1.00	1.00	1.00	1.00	1.00	1.00	1.00	1.00	1.00
Adj Sat Flow, veh/h/ln	1863	1863	1900	1863	1863	1863	1863	1863	1863	1863	1863	1863
Adj Flow Rate, veh/h	65	5	4	11	5	1	179	886	8	5	832	44
Adj No. of Lanes	1	1	0	1	1	1	1	1	1	1	1	1
Peak Hour Factor	0.92	0.92	0.92	0.92	0.92	0.92	0.92	0.92	0.92	0.92	0.92	0.92
Percent Heavy Veh, %	2	2	2	2	2	2	2	2	2	2	2	2
Cap, veh/h	85	114	91	14	150	124	222	1169	994	7	944	801
Arrive On Green	0.05	0.12	0.12	0.01	0.08	0.08	0.12	0.63	0.63	0.00	0.51	0.51
Sat Flow, veh/h	1774	946	757	1774	1863	1537	1774	1863	1583	1774	1863	1580
Grp Volume(v), veh/h	65	0	9	11	5	1	179	886	8	5	832	44
Grp Sat Flow(s),veh/h/ln	1774	0	1703	1774	1863	1537	1774	1863	1583	1774	1863	1580
Q Serve(g_s), s	3.0	0.0	0.4	0.5	0.2	0.0	8.2	28.2	0.2	0.2	33.2	1.2
Cycle Q Clear(g_c), s	3.0	0.0	0.4	0.5	0.2	0.0	8.2	28.2	0.2	0.2	33.2	1.2
Prop In Lane	1.00		0.44	1.00		1.00	1.00		1.00	1.00		1.00
Lane Grp Cap(c), veh/h	85	0	205	14	150	124	222	1169	994	7	944	801
V/C Ratio(X)	0.77	0.00	0.04	0.77	0.03	0.01	0.81	0.76	0.01	0.72	0.88	0.05
Avail Cap(c_a), veh/h	425	0	429	425	469	387	532	1452	1234	532	1452	1231
HCM Platoon Ratio	1.00	1.00	1.00	1.00	1.00	1.00	1.00	1.00	1.00	1.00	1.00	1.00
Upstream Filter(I)	1.00	0.00	1.00	1.00	1.00	1.00	1.00	1.00	1.00	1.00	1.00	1.00
Uniform Delay (d), s/veh	39.3	0.0	32.4	41.3	35.3	35.3	35.5	11.0	5.8	41.5	18.3	10.4
Incr Delay (d2), s/veh	13.4	0.0	0.1	57.4	0.1	0.0	6.8	1.8	0.0	84.6	4.3	0.0
Initial Q Delay(d3),s/veh	0.0	0.0	0.0	0.0	0.0	0.0	0.0	0.0	0.0	0.0	0.0	0.0
%ile BackOfQ(50%),veh/ln	1.8	0.0	0.2	0.5	0.1	0.0	4.4	14.9	0.1	0.3	18.0	0.5
LnGrp Delay(d),s/veh	52.6	0.0	32.5	98.7	35.4	35.3	42.4	12.9	5.8	126.1	22.7	10.5
LnGrp LOS	D		C	F	D	D	D	B	A	F	C	B
Approach Vol, veh/h		74			17			1073			881	
Approach Delay, s/veh		50.2			76.4			17.7			22.6	
Approach LOS		D			E			B			C	

Timer	1	2	3	4	5	6	7	8
Assigned Phs	1	2	3	4	5	6	7	8
Phs Duration (G+Y+Rc), s	5.3	57.4	5.7	15.0	15.4	47.3	9.0	11.7
Change Period (Y+Rc), s	5.0	5.0	5.0	5.0	5.0	5.0	5.0	5.0
Max Green Setting (Gmax), s	25.0	65.0	20.0	21.0	25.0	65.0	20.0	21.0
Max Q Clear Time (g_c+I1), s	2.2	30.2	2.5	2.4	10.2	35.2	5.0	2.2
Green Ext Time (p_c), s	0.0	8.0	0.0	0.0	0.4	7.1	0.1	0.0

Intersection Summary	
HCM 2010 Ctrl Delay	21.5
HCM 2010 LOS	C

Movement	EBL	EBT	EBR	WBL	WBT	WBR	NBL	NBT	NBR	SBL	SBT	SBR
Lane Configurations												
Traffic Volume (veh/h)	75	5	600	80	10	10	605	880	10	5	810	20
Future Volume (veh/h)	75	5	600	80	10	10	605	880	10	5	810	20
Number	3	8	18	7	4	14	1	6	16	5	2	12
Initial Q (Qb), veh	0	0	0	0	0	0	0	0	0	0	0	0
Ped-Bike Adj(A_pbT)	1.00		1.00	1.00		1.00	1.00		1.00	1.00		1.00
Parking Bus, Adj	1.00	1.00	1.00	1.00	1.00	1.00	1.00	1.00	1.00	1.00	1.00	1.00
Adj Sat Flow, veh/h/ln	1900	1863	1863	1900	1863	1900	1863	1863	1900	1863	1863	1863
Adj Flow Rate, veh/h	82	5	0	87	11	9	658	957	11	5	880	6
Adj No. of Lanes	0	1	1	0	1	0	1	2	0	1	2	1
Peak Hour Factor	0.92	0.92	0.92	0.92	0.92	0.92	0.92	0.92	0.92	0.92	0.92	0.92
Percent Heavy Veh, %	2	2	2	2	2	2	2	2	2	2	2	2
Cap, veh/h	203	8	139	186	15	12	702	2681	31	7	1260	564
Arrive On Green	0.10	0.09	0.00	0.10	0.09	0.09	0.40	0.75	0.75	0.00	0.36	0.36
Sat Flow, veh/h	1461	89	1583	1320	167	137	1774	3584	41	1774	3539	1583
Grp Volume(v), veh/h	87	0	0	107	0	0	658	473	495	5	880	6
Grp Sat Flow(s),veh/h/ln	1550	0	1583	1623	0	0	1774	1770	1855	1774	1770	1583
Q Serve(g_s), s	0.0	0.0	0.0	0.8	0.0	0.0	33.4	8.6	8.6	0.3	20.0	0.2
Cycle Q Clear(g_c), s	4.7	0.0	0.0	5.5	0.0	0.0	33.4	8.6	8.6	0.3	20.0	0.2
Prop In Lane	0.94		1.00	0.81		0.08	1.00		0.02	1.00		1.00
Lane Grp Cap(c), veh/h	228	0	139	230	0	0	702	1324	1388	7	1260	564
V/C Ratio(X)	0.38	0.00	0.00	0.47	0.00	0.00	0.94	0.36	0.36	0.72	0.70	0.01
Avail Cap(c_a), veh/h	404	0	338	490	0	0	1345	1324	1388	1345	2607	1166
HCM Platoon Ratio	1.00	1.00	1.00	1.00	1.00	1.00	1.00	1.00	1.00	1.00	1.00	1.00
Upstream Filter(I)	1.00	0.00	0.00	1.00	0.00	0.00	1.00	1.00	1.00	1.00	1.00	1.00
Uniform Delay (d), s/veh	40.7	0.0	0.0	41.0	0.0	0.0	27.2	4.1	4.1	46.6	25.8	19.5
Incr Delay (d2), s/veh	1.1	0.0	0.0	1.5	0.0	0.0	2.8	0.3	0.3	40.7	1.5	0.0
Initial Q Delay(d3),s/veh	0.0	0.0	0.0	0.0	0.0	0.0	0.0	0.0	0.0	0.0	0.0	0.0
%ile BackOfQ(50%),veh/ln	2.2	0.0	0.0	2.7	0.0	0.0	16.8	4.2	4.4	0.2	10.0	0.1
LnGrp Delay(d),s/veh	41.7	0.0	0.0	42.5	0.0	0.0	30.0	4.4	4.4	87.3	27.4	19.5
LnGrp LOS	D			D			C	A	A	F	C	B
Approach Vol, veh/h		87			107			1626			891	
Approach Delay, s/veh		41.7			42.5			14.8			27.6	
Approach LOS		D			D			B			C	

Timer	1	2	3	4	5	6	7	8
Assigned Phs	1	2		4	5	6		8
Phs Duration (G+Y+Rc), s	41.1	39.4		13.2	4.4	76.1		13.2
Change Period (Y+Rc), s	4.0	6.0		5.0	4.0	6.0		5.0
Max Green Setting (Gmax), s	71.0	69.0		25.0	71.0	69.0		20.0
Max Q Clear Time (g_c+I1), s	35.4	22.0		7.5	2.3	10.6		6.7
Green Ext Time (p_c), s	1.7	11.4		0.3	0.0	12.2		0.2

Intersection Summary	
HCM 2010 Ctrl Delay	20.9
HCM 2010 LOS	C

Movement	EBL	EBT	EBR	WBL	WBT	WBR	NBL	NBT	NBR	SBL	SBT	SBR
Lane Configurations												
Traffic Volume (veh/h)	50	5	140	15	0	5	135	1435	10	10	1485	60
Future Volume (veh/h)	50	5	140	15	0	5	135	1435	10	10	1485	60
Number	3	8	18	7	4	14	1	6	16	5	2	12
Initial Q (Qb), veh	0	0	0	0	0	0	0	0	0	0	0	0
Ped-Bike Adj(A_pbT)	0.96		1.00	0.97		0.96	1.00		1.00	1.00		1.00
Parking Bus, Adj	1.00	1.00	1.00	1.00	1.00	1.00	1.00	1.00	1.00	1.00	1.00	1.00
Adj Sat Flow, veh/h/ln	1900	1863	1863	1900	1863	1900	1863	1863	1900	1863	1863	1863
Adj Flow Rate, veh/h	54	5	-5	16	0	1	147	1560	11	11	1614	38
Adj No. of Lanes	0	1	1	0	1	0	1	2	0	1	2	1
Peak Hour Factor	0.92	0.92	0.92	0.92	0.92	0.92	0.92	0.92	0.92	0.92	0.92	0.92
Percent Heavy Veh, %	2	2	2	2	2	2	2	2	2	2	2	2
Cap, veh/h	214	16	172	227	2	9	180	2626	19	14	2248	1006
Arrive On Green	0.12	0.11	0.00	0.12	0.00	0.11	0.10	0.73	0.73	0.01	0.64	0.64
Sat Flow, veh/h	1268	149	1583	1376	20	87	1774	3602	25	1774	3539	1583
Grp Volume(v), veh/h	59	0	-5	17	0	0	147	766	805	11	1614	38
Grp Sat Flow(s),veh/h/ln	1418	0	1583	1483	0	0	1774	1770	1858	1774	1770	1583
Q Serve(g_s), s	2.5	0.0	0.0	0.0	0.0	0.0	7.4	18.8	18.8	0.6	27.7	0.8
Cycle Q Clear(g_c), s	3.3	0.0	0.0	0.8	0.0	0.0	7.4	18.8	18.8	0.6	27.7	0.8
Prop In Lane	0.92		1.00	0.94		0.06	1.00		0.01	1.00		1.00
Lane Grp Cap(c), veh/h	246	0	172	255	0	0	180	1290	1354	14	2248	1006
V/C Ratio(X)	0.24	0.00	-0.03	0.07	0.00	0.00	0.82	0.59	0.59	0.77	0.72	0.04
Avail Cap(c_a), veh/h	447	0	401	454	0	0	411	1677	1761	215	2965	1326
HCM Platoon Ratio	1.00	1.00	1.00	1.00	1.00	1.00	1.00	1.00	1.00	1.00	1.00	1.00
Upstream Filter(I)	1.00	0.00	0.00	1.00	0.00	0.00	1.00	1.00	1.00	1.00	1.00	1.00
Uniform Delay (d), s/veh	37.0	0.0	0.0	36.0	0.0	0.0	39.9	5.9	5.9	44.9	11.1	6.2
Incr Delay (d2), s/veh	0.2	0.0	0.0	0.0	0.0	0.0	3.4	0.9	0.9	27.4	1.0	0.0
Initial Q Delay(d3),s/veh	0.0	0.0	0.0	0.0	0.0	0.0	0.0	0.0	0.0	0.0	0.0	0.0
%ile BackOfQ(50%),veh/ln	1.4	0.0	0.0	0.4	0.0	0.0	3.8	9.3	9.7	0.4	13.8	0.4
LnGrp Delay(d),s/veh	37.2	0.0	0.0	36.0	0.0	0.0	43.3	6.8	6.8	72.3	12.1	6.2
LnGrp LOS	D			D			D	A	A	E	B	A
Approach Vol, veh/h		54			17			1718			1663	
Approach Delay, s/veh		40.6			36.0			9.9			12.4	
Approach LOS		D			D			A			B	

Timer	1	2	3	4	5	6	7	8
Assigned Phs	1	2		4	5	6		8
Phs Duration (G+Y+Rc), s	13.2	62.6		14.9	4.7	71.1		14.9
Change Period (Y+Rc), s	4.0	5.0		5.0	4.0	5.0		5.0
Max Green Setting (Gmax), s	21.0	76.0		23.0	11.0	86.0		23.0
Max Q Clear Time (g_c+I1), s	9.4	29.7		2.8	2.6	20.8		5.3
Green Ext Time (p_c), s	0.1	27.9		0.0	0.0	29.9		0.1

Intersection Summary	
HCM 2010 Ctrl Delay	11.7
HCM 2010 LOS	B

Movement	EBL	EBT	EBR	WBL	WBT	WBR	NBL	NBT	NBR	SBL	SBT	SBR
Lane Configurations												
Traffic Volume (veh/h)	75	5	175	70	5	45	125	1425	60	35	1645	95
Future Volume (veh/h)	75	5	175	70	5	45	125	1425	60	35	1645	95
Number	3	8	18	7	4	14	1	6	16	5	2	12
Initial Q (Qb), veh	0	0	0	0	0	0	0	0	0	0	0	0
Ped-Bike Adj(A_pbT)	0.99		0.99	0.99		0.99	1.00		1.00	1.00		1.00
Parking Bus, Adj	1.00	1.00	1.00	1.00	1.00	1.00	1.00	1.00	1.00	1.00	1.00	1.00
Adj Sat Flow, veh/h/ln	1900	1863	1863	1863	1863	1900	1863	1863	1863	1863	1863	1863
Adj Flow Rate, veh/h	82	5	27	76	5	1	136	1549	49	38	1788	81
Adj No. of Lanes	0	1	1	1	1	0	1	2	1	1	2	1
Peak Hour Factor	0.92	0.92	0.92	0.92	0.92	0.92	0.92	0.92	0.92	0.92	0.92	0.92
Percent Heavy Veh, %	2	2	2	2	2	2	2	2	2	2	2	2
Cap, veh/h	212	12	205	142	197	39	157	2656	1187	49	2440	1091
Arrive On Green	0.14	0.13	0.13	0.13	0.13	0.13	0.09	0.75	0.75	0.03	0.69	0.69
Sat Flow, veh/h	1298	89	1562	1358	1504	301	1774	3539	1582	1774	3539	1583
Grp Volume(v), veh/h	87	0	27	76	0	6	136	1549	49	38	1788	81
Grp Sat Flow(s),veh/h/ln	1387	0	1562	1358	0	1805	1774	1770	1582	1774	1770	1583
Q Serve(g_s), s	9.2	0.0	2.5	9.1	0.0	0.5	12.5	32.1	1.3	3.5	52.3	2.8
Cycle Q Clear(g_c), s	9.7	0.0	2.5	18.8	0.0	0.5	12.5	32.1	1.3	3.5	52.3	2.8
Prop In Lane	0.94		1.00	1.00		0.17	1.00		1.00	1.00		1.00
Lane Grp Cap(c), veh/h	233	0	205	142	0	237	157	2656	1187	49	2440	1091
V/C Ratio(X)	0.37	0.00	0.13	0.54	0.00	0.03	0.86	0.58	0.04	0.78	0.73	0.07
Avail Cap(c_a), veh/h	253	0	227	161	0	263	280	2656	1187	108	2440	1091
HCM Platoon Ratio	1.00	1.00	1.00	1.00	1.00	1.00	1.00	1.00	1.00	1.00	1.00	1.00
Upstream Filter(I)	1.00	0.00	1.00	1.00	0.00	1.00	0.71	0.71	0.71	1.00	1.00	1.00
Uniform Delay (d), s/veh	66.2	0.0	63.4	75.2	0.0	62.5	74.2	9.1	5.3	79.7	16.1	8.4
Incr Delay (d2), s/veh	1.0	0.0	0.3	3.1	0.0	0.0	3.9	0.7	0.0	9.3	2.0	0.1
Initial Q Delay(d3),s/veh	0.0	0.0	0.0	0.0	0.0	0.0	0.0	0.0	0.0	0.0	0.0	0.0
%ile BackOfQ(50%),veh/ln	3.7	0.0	1.1	3.5	0.0	0.2	6.3	15.7	0.6	1.8	26.0	1.3
LnGrp Delay(d),s/veh	67.2	0.0	63.7	78.4	0.0	62.5	78.1	9.8	5.3	89.0	18.1	8.5
LnGrp LOS	E		E	E		E	E	A	A	F	B	A
Approach Vol, veh/h		114			82			1734			1907	
Approach Delay, s/veh		66.4			77.2			15.0			19.1	
Approach LOS		E			E			B			B	

Timer	1	2	3	4	5	6	7	8
Assigned Phs	1	2		4	5	6		8
Phs Duration (G+Y+Rc), s	18.6	119.7		26.6	8.6	129.8		26.6
Change Period (Y+Rc), s	4.0	6.0		5.0	4.0	6.0		5.0
Max Green Setting (Gmax), s	26.0	100.0		24.0	10.0	116.0		24.0
Max Q Clear Time (g_c+I1), s	14.5	54.3		20.8	5.5	34.1		11.7
Green Ext Time (p_c), s	0.2	32.1		0.1	0.0	34.5		0.3

Intersection Summary	
HCM 2010 Ctrl Delay	19.9
HCM 2010 LOS	B

Movement	EBL	EBT	EBR	WBL	WBT	WBR	NBL	NBT	NBR	SBL	SBT	SBR
Lane Configurations												
Traffic Volume (veh/h)	290	5	615	15	0	5	385	1470	10	75	1690	135
Future Volume (veh/h)	290	5	615	15	0	5	385	1470	10	75	1690	135
Number	3	8	18	7	4	14	1	6	16	5	2	12
Initial Q (Qb), veh	0	0	0	0	0	0	0	0	0	0	0	0
Ped-Bike Adj(A_pbT)	1.00		0.99	1.00		0.96	1.00		1.00	1.00		1.00
Parking Bus, Adj	1.00	1.00	1.00	1.00	1.00	1.00	1.00	1.00	1.00	1.00	1.00	1.00
Adj Sat Flow, veh/h/ln	1863	1863	1863	1900	1863	1900	1863	1863	1900	1863	1863	1863
Adj Flow Rate, veh/h	319	0	460	16	0	1	418	1598	11	82	1837	126
Adj No. of Lanes	2	0	2	0	1	0	2	2	0	1	2	1
Peak Hour Factor	0.92	0.92	0.92	0.92	0.92	0.92	0.92	0.92	0.92	0.92	0.92	0.92
Percent Heavy Veh, %	2	2	2	2	2	2	2	2	2	2	2	2
Cap, veh/h	533	0	906	70	0	4	490	2411	17	114	2090	1166
Arrive On Green	0.15	0.00	0.15	0.04	0.00	0.03	0.14	0.67	0.66	0.06	0.59	0.59
Sat Flow, veh/h	3548	0	3123	1653	0	103	3442	3603	25	1774	3539	1583
Grp Volume(v), veh/h	319	0	460	17	0	0	418	784	825	82	1837	126
Grp Sat Flow(s),veh/h/ln	1774	0	1562	1756	0	0	1721	1770	1858	1774	1770	1583
Q Serve(g_s), s	18.0	0.0	26.4	2.0	0.0	0.0	25.4	56.5	56.6	9.7	94.7	4.9
Cycle Q Clear(g_c), s	18.0	0.0	26.4	2.0	0.0	0.0	25.4	56.5	56.6	9.7	94.7	4.9
Prop In Lane	1.00		1.00	0.94		0.06	1.00		0.01	1.00		1.00
Lane Grp Cap(c), veh/h	533	0	906	74	0	0	490	1184	1243	114	2090	1166
V/C Ratio(X)	0.60	0.00	0.51	0.23	0.00	0.00	0.85	0.66	0.66	0.72	0.88	0.11
Avail Cap(c_a), veh/h	563	0	932	254	0	0	931	1601	1681	124	2492	1345
HCM Platoon Ratio	1.00	1.00	1.00	1.00	1.00	1.00	1.00	1.00	1.00	1.00	1.00	1.00
Upstream Filter(I)	1.00	0.00	1.00	1.00	0.00	0.00	1.00	1.00	1.00	1.00	1.00	1.00
Uniform Delay (d), s/veh	85.1	0.0	63.7	99.4	0.0	0.0	89.7	21.1	21.1	98.5	37.4	8.1
Incr Delay (d2), s/veh	1.0	0.0	0.2	0.6	0.0	0.0	1.7	0.9	0.9	13.9	3.7	0.1
Initial Q Delay(d3),s/veh	0.0	0.0	0.0	0.0	0.0	0.0	0.0	0.0	0.0	0.0	0.0	0.0
%ile BackOfQ(50%),veh/ln	8.9	0.0	11.4	1.0	0.0	0.0	12.2	27.8	29.2	5.2	47.3	3.3
LnGrp Delay(d),s/veh	86.1	0.0	63.9	100.0	0.0	0.0	91.4	22.0	22.0	112.3	41.1	8.2
LnGrp LOS	F		E	F			F	C	C	F	D	A
Approach Vol, veh/h		779			17			2027			2045	
Approach Delay, s/veh		73.0			100.0			36.3			41.9	
Approach LOS		E			F			D			D	

Timer	1	2	3	4	5	6	7	8
Assigned Phs	1	2		4	5	6		8
Phs Duration (G+Y+Rc), s	34.6	130.6		13.0	17.7	147.5		36.2
Change Period (Y+Rc), s	6.0	6.0		7.0	6.0	6.0		7.0
Max Green Setting (Gmax), s	56.0	149.0		28.0	13.0	192.0		31.0
Max Q Clear Time (g_c+I1), s	27.4	96.7		4.0	11.7	58.6		28.4
Green Ext Time (p_c), s	1.1	27.9		0.0	0.0	21.5		0.8

Intersection Summary	
HCM 2010 Ctrl Delay	44.8
HCM 2010 LOS	D

Notes

Movement	EBL	EBT	EBR	WBL	WBT	WBR	NBL	NBT	NBR	SBL	SBT	SBR
Lane Configurations												
Traffic Volume (veh/h)	10	0	5	90	5	60	10	1805	90	85	2250	5
Future Volume (veh/h)	10	0	5	90	5	60	10	1805	90	85	2250	5
Number	3	8	18	7	4	14	1	6	16	5	2	12
Initial Q (Qb), veh	0	0	0	0	0	0	0	0	0	0	0	0
Ped-Bike Adj(A_pbT)	1.00		1.00	1.00		1.00	1.00		1.00	1.00		1.00
Parking Bus, Adj	1.00	1.00	1.00	1.00	1.00	1.00	1.00	1.00	1.00	1.00	1.00	1.00
Adj Sat Flow, veh/h/ln	1900	1863	1900	1863	1863	1900	1863	1863	1900	1863	1863	1900
Adj Flow Rate, veh/h	11	0	1	98	5	3	11	1962	96	92	2446	5
Adj No. of Lanes	0	1	0	1	1	0	1	2	0	1	2	0
Peak Hour Factor	0.92	0.92	0.92	0.92	0.92	0.92	0.92	0.92	0.92	0.92	0.92	0.92
Percent Heavy Veh, %	2	2	2	2	2	2	2	2	2	2	2	2
Cap, veh/h	160	2	10	182	96	58	18	2599	126	118	2945	6
Arrive On Green	0.09	0.00	0.08	0.09	0.09	0.08	0.02	1.00	1.00	0.07	0.81	0.81
Sat Flow, veh/h	1235	26	115	1410	1092	655	1774	3436	167	1774	3624	7
Grp Volume(v), veh/h	12	0	0	98	0	8	11	1003	1055	92	1194	1257
Grp Sat Flow(s),veh/h/ln	1376	0	0	1410	0	1747	1774	1770	1833	1774	1770	1861
Q Serve(g_s), s	0.8	0.0	0.0	7.4	0.0	0.6	0.8	0.0	0.0	6.9	52.4	52.5
Cycle Q Clear(g_c), s	1.4	0.0	0.0	8.8	0.0	0.6	0.8	0.0	0.0	6.9	52.4	52.5
Prop In Lane	0.92		0.08	1.00		0.38	1.00		0.09	1.00		0.00
Lane Grp Cap(c), veh/h	173	0	0	182	0	154	18	1338	1386	118	1438	1513
V/C Ratio(X)	0.07	0.00	0.00	0.54	0.00	0.05	0.62	0.75	0.76	0.78	0.83	0.83
Avail Cap(c_a), veh/h	299	0	0	308	0	311	145	1338	1386	250	1438	1513
HCM Platoon Ratio	1.00	1.00	1.00	1.00	1.00	1.00	2.00	2.00	2.00	1.00	1.00	1.00
Upstream Filter(I)	1.00	0.00	0.00	1.00	0.00	1.00	0.60	0.60	0.60	1.00	1.00	1.00
Uniform Delay (d), s/veh	56.9	0.0	0.0	60.0	0.0	56.5	65.9	0.0	0.0	62.0	7.3	7.3
Incr Delay (d2), s/veh	0.2	0.0	0.0	2.5	0.0	0.1	7.6	2.4	2.4	4.1	5.7	5.4
Initial Q Delay(d3),s/veh	0.0	0.0	0.0	0.0	0.0	0.0	0.0	0.0	0.0	0.0	0.0	0.0
%ile BackOfQ(50%),veh/ln	0.4	0.0	0.0	3.7	0.0	0.3	0.4	0.9	0.9	3.5	27.2	28.5
LnGrp Delay(d),s/veh	57.0	0.0	0.0	62.5	0.0	56.7	73.5	2.4	2.4	66.2	13.0	12.7
LnGrp LOS	E			E		E	E	A	A	E	B	B
Approach Vol, veh/h		12			106			2069			2543	
Approach Delay, s/veh		57.0			62.0			2.8			14.8	
Approach LOS		E			E			A			B	

Timer	1	2	3	4	5	6	7	8
Assigned Phs	1	2		4	5	6		8
Phs Duration (G+Y+Rc), s	5.4	113.7		15.9	13.0	106.1		15.9
Change Period (Y+Rc), s	4.0	5.0		5.0	4.0	5.0		5.0
Max Green Setting (Gmax), s	11.0	87.0		23.0	19.0	79.0		23.0
Max Q Clear Time (g_c+I1), s	2.8	54.5		10.8	8.9	2.0		3.4
Green Ext Time (p_c), s	0.0	30.8		0.2	0.1	54.6		0.0

Intersection Summary	
HCM 2010 Ctrl Delay	10.7
HCM 2010 LOS	B

Movement	EBL	EBT	EBR	WBL	WBT	WBR	NBL	NBT	NBR	SBL	SBT	SBR
Lane Configurations												
Traffic Volume (veh/h)	175	15	10	60	5	10	5	1730	20	5	1910	325
Future Volume (veh/h)	175	15	10	60	5	10	5	1730	20	5	1910	325
Number	3	8	18	7	4	14	1	6	16	5	2	12
Initial Q (Qb), veh	0	0	0	0	0	0	0	0	0	0	0	0
Ped-Bike Adj(A_pbT)	1.00		1.00	1.00		1.00	1.00		1.00	1.00		1.00
Parking Bus, Adj	1.00	1.00	1.00	1.00	1.00	1.00	1.00	1.00	1.00	1.00	1.00	1.00
Adj Sat Flow, veh/h/ln	1900	1863	1900	1900	1863	1900	1863	1863	1900	1863	1863	1863
Adj Flow Rate, veh/h	190	16	9	65	5	7	5	1880	21	5	2076	278
Adj No. of Lanes	0	1	0	0	1	0	1	2	0	1	2	1
Peak Hour Factor	0.92	0.92	0.92	0.92	0.92	0.92	0.92	0.92	0.92	0.92	0.92	0.92
Percent Heavy Veh, %	2	2	2	2	2	2	2	2	2	2	2	2
Cap, veh/h	268	18	10	273	22	25	7	2662	30	7	2627	1175
Arrive On Green	0.16	0.16	0.16	0.16	0.16	0.16	0.01	1.00	1.00	0.00	0.74	0.74
Sat Flow, veh/h	1321	111	63	1358	132	149	1774	3585	40	1774	3539	1583
Grp Volume(v), veh/h	215	0	0	77	0	0	5	926	975	5	2076	278
Grp Sat Flow(s),veh/h/ln	1495	0	0	1639	0	0	1774	1770	1856	1774	1770	1583
Q Serve(g_s), s	13.4	0.0	0.0	0.0	0.0	0.0	0.4	0.0	0.0	0.4	49.3	7.4
Cycle Q Clear(g_c), s	18.8	0.0	0.0	5.4	0.0	0.0	0.4	0.0	0.0	0.4	49.3	7.4
Prop In Lane	0.88		0.04	0.84		0.09	1.00		0.02	1.00		1.00
Lane Grp Cap(c), veh/h	297	0	0	319	0	0	7	1314	1378	7	2627	1175
V/C Ratio(X)	0.72	0.00	0.00	0.24	0.00	0.00	0.74	0.71	0.71	0.74	0.79	0.24
Avail Cap(c_a), veh/h	379	0	0	401	0	0	105	1314	1378	105	2627	1175
HCM Platoon Ratio	1.00	1.00	1.00	1.00	1.00	1.00	2.00	2.00	2.00	1.00	1.00	1.00
Upstream Filter(I)	1.00	0.00	0.00	1.00	0.00	0.00	0.60	0.60	0.60	0.39	0.39	0.39
Uniform Delay (d), s/veh	54.6	0.0	0.0	49.4	0.0	0.0	66.9	0.0	0.0	67.2	10.8	5.4
Incr Delay (d2), s/veh	4.9	0.0	0.0	0.4	0.0	0.0	29.4	1.9	1.9	20.3	1.0	0.2
Initial Q Delay(d3),s/veh	0.0	0.0	0.0	0.0	0.0	0.0	0.0	0.0	0.0	0.0	0.0	0.0
%ile BackOfQ(50%),veh/ln	8.2	0.0	0.0	2.6	0.0	0.0	0.2	0.7	0.7	0.2	24.0	3.2
LnGrp Delay(d),s/veh	59.5	0.0	0.0	49.7	0.0	0.0	96.3	1.9	1.9	87.4	11.8	5.6
LnGrp LOS	E			D			F	A	A	F	B	A
Approach Vol, veh/h		215			77			1906			2359	
Approach Delay, s/veh		59.5			49.7			2.1			11.3	
Approach LOS		E			D			A			B	

Timer	1	2	3	4	5	6	7	8
Assigned Phs	1	2		4	5	6		8
Phs Duration (G+Y+Rc), s	4.5	104.2		26.3	4.5	104.2		26.3
Change Period (Y+Rc), s	4.0	5.0		5.0	4.0	5.0		5.0
Max Green Setting (Gmax), s	8.0	84.0		29.0	8.0	84.0		29.0
Max Q Clear Time (g_c+I1), s	2.4	51.3		7.4	2.4	2.0		20.8
Green Ext Time (p_c), s	0.0	30.9		0.2	0.0	62.7		0.5

Intersection Summary	
HCM 2010 Ctrl Delay	10.4
HCM 2010 LOS	B

Movement	EBL	EBT	EBR	WBL	WBT	WBR	NBL	NBT	NBR	SBL	SBT	SBR
Lane Configurations												
Traffic Volume (veh/h)	180	35	45	95	25	20	55	1535	105	25	1845	150
Future Volume (veh/h)	180	35	45	95	25	20	55	1535	105	25	1845	150
Number	3	8	18	7	4	14	1	6	16	5	2	12
Initial Q (Qb), veh	0	0	0	0	0	0	0	0	0	0	0	0
Ped-Bike Adj(A_pbT)	0.98		0.98	0.99		0.97	1.00		1.00	1.00		1.00
Parking Bus, Adj	1.00	1.00	1.00	1.00	1.00	1.00	1.00	1.00	1.00	1.00	1.00	1.00
Adj Sat Flow, veh/h/ln	1900	1863	1863	1863	1863	1900	1863	1863	1900	1863	1863	1900
Adj Flow Rate, veh/h	196	38	8	103	27	2	60	1668	111	27	2005	159
Adj No. of Lanes	0	1	1	1	1	0	1	2	0	1	2	0
Peak Hour Factor	0.92	0.92	0.92	0.92	0.92	0.92	0.92	0.92	0.92	0.92	0.92	0.92
Percent Heavy Veh, %	2	2	2	2	2	2	2	2	2	2	2	2
Cap, veh/h	268	43	307	355	340	25	76	2336	154	34	2225	174
Arrive On Green	0.20	0.20	0.20	0.20	0.20	0.19	0.09	1.00	1.00	0.04	1.00	1.00
Sat Flow, veh/h	1103	214	1545	1347	1710	127	1774	3370	223	1774	3325	260
Grp Volume(v), veh/h	234	0	8	103	0	29	60	870	909	27	1054	1110
Grp Sat Flow(s),veh/h/ln	1317	0	1545	1347	0	1837	1774	1770	1823	1774	1770	1816
Q Serve(g_s), s	21.9	0.0	0.6	0.0	0.0	1.7	4.5	0.0	0.0	2.0	0.0	0.0
Cycle Q Clear(g_c), s	23.6	0.0	0.6	7.7	0.0	1.7	4.5	0.0	0.0	2.0	0.0	0.0
Prop In Lane	0.84		1.00	1.00		0.07	1.00		0.12	1.00		0.14
Lane Grp Cap(c), veh/h	311	0	307	355	0	365	76	1227	1264	34	1184	1215
V/C Ratio(X)	0.75	0.00	0.03	0.29	0.00	0.08	0.79	0.71	0.72	0.80	0.89	0.91
Avail Cap(c_a), veh/h	333	0	332	377	0	395	105	1227	1264	105	1184	1215
HCM Platoon Ratio	1.00	1.00	1.00	1.00	1.00	1.00	2.00	2.00	2.00	2.00	2.00	2.00
Upstream Filter(I)	1.00	0.00	1.00	1.00	0.00	1.00	0.38	0.38	0.38	0.50	0.50	0.50
Uniform Delay (d), s/veh	53.6	0.0	43.5	46.4	0.0	44.0	61.1	0.0	0.0	64.7	0.0	0.0
Incr Delay (d2), s/veh	8.7	0.0	0.0	0.4	0.0	0.1	6.5	1.3	1.4	7.7	5.5	6.6
Initial Q Delay(d3),s/veh	0.0	0.0	0.0	0.0	0.0	0.0	0.0	0.0	0.0	0.0	0.0	0.0
%ile BackOfQ(50%),veh/ln	9.3	0.0	0.2	3.3	0.0	0.9	2.3	0.5	0.5	1.1	1.8	2.2
LnGrp Delay(d),s/veh	62.3	0.0	43.6	46.9	0.0	44.1	67.6	1.3	1.4	72.4	5.5	6.6
LnGrp LOS	E		D	D		D	E	A	A	E	A	A
Approach Vol, veh/h		242			132			1839			2191	
Approach Delay, s/veh		61.7			46.3			3.5			6.9	
Approach LOS		E			D			A			A	

Timer	1	2	3	4	5	6	7	8
Assigned Phs	1	2		4	5	6		8
Phs Duration (G+Y+Rc), s	9.8	94.3		30.9	6.6	97.6		30.9
Change Period (Y+Rc), s	4.0	5.0		5.0	4.0	5.0		5.0
Max Green Setting (Gmax), s	8.0	85.0		28.0	8.0	85.0		28.0
Max Q Clear Time (g_c+I1), s	6.5	2.0		9.7	4.0	2.0		25.6
Green Ext Time (p_c), s	0.0	62.6		0.4	0.0	43.1		0.2

Intersection Summary	
HCM 2010 Ctrl Delay	9.7
HCM 2010 LOS	A

Movement	EBL	EBT	EBR	WBL	WBT	WBR	NBL	NBT	NBR	SBL	SBT	SBR
Lane Configurations												
Traffic Volume (veh/h)	60	185	60	125	110	695	55	940	195	630	1225	65
Future Volume (veh/h)	60	185	60	125	110	695	55	940	195	630	1225	65
Number	7	4	14	3	8	18	1	6	16	5	2	12
Initial Q (Qb), veh	0	0	0	0	0	0	0	0	0	0	0	0
Ped-Bike Adj(A_pbT)	0.99		0.97	1.00		0.98	1.00		0.99	1.00		0.99
Parking Bus, Adj	1.00	1.00	1.00	1.00	1.00	1.00	1.00	1.00	1.00	1.00	1.00	1.00
Adj Sat Flow, veh/h/ln	1900	1863	1863	1863	1863	1863	1863	1863	1863	1863	1863	1900
Adj Flow Rate, veh/h	65	201	8	136	120	454	60	1022	128	685	1332	69
Adj No. of Lanes	0	1	1	1	1	1	1	2	1	2	2	0
Peak Hour Factor	0.92	0.92	0.92	0.92	0.92	0.92	0.92	0.92	0.92	0.92	0.92	0.92
Percent Heavy Veh, %	2	2	2	2	2	2	2	2	2	2	2	2
Cap, veh/h	97	239	317	234	589	492	77	1361	604	724	1887	98
Arrive On Green	0.21	0.21	0.21	0.08	0.32	0.32	0.04	0.38	0.38	0.42	1.00	1.00
Sat Flow, veh/h	310	1163	1542	1774	1863	1556	1774	3539	1571	3442	3423	177
Grp Volume(v), veh/h	266	0	8	136	120	454	60	1022	128	685	687	714
Grp Sat Flow(s),veh/h/ln	1473	0	1542	1774	1863	1556	1774	1770	1571	1721	1770	1830
Q Serve(g_s), s	20.4	0.0	0.6	7.8	6.4	38.0	4.5	33.7	7.4	25.9	0.0	0.0
Cycle Q Clear(g_c), s	23.5	0.0	0.6	7.8	6.4	38.0	4.5	33.7	7.4	25.9	0.0	0.0
Prop In Lane	0.24		1.00	1.00		1.00	1.00		1.00	1.00		0.10
Lane Grp Cap(c), veh/h	336	0	317	234	589	492	77	1361	604	724	976	1009
V/C Ratio(X)	0.79	0.00	0.03	0.58	0.20	0.92	0.78	0.75	0.21	0.95	0.70	0.71
Avail Cap(c_a), veh/h	339	0	320	301	662	553	237	1361	604	765	976	1009
HCM Platoon Ratio	1.00	1.00	1.00	1.00	1.00	1.00	1.00	1.00	1.00	2.00	2.00	2.00
Upstream Filter(I)	1.00	0.00	1.00	1.00	1.00	1.00	0.88	0.88	0.88	0.31	0.31	0.31
Uniform Delay (d), s/veh	51.6	0.0	42.8	38.4	33.7	44.6	63.9	36.0	27.8	38.4	0.0	0.0
Incr Delay (d2), s/veh	12.0	0.0	0.0	2.3	0.2	19.9	5.4	3.4	0.7	8.1	1.3	1.3
Initial Q Delay(d3),s/veh	0.0	0.0	0.0	0.0	0.0	0.0	0.0	0.0	0.0	0.0	0.0	0.0
%ile BackOfQ(50%),veh/ln	10.7	0.0	0.2	4.0	3.3	19.0	2.3	17.1	3.3	12.9	0.4	0.4
LnGrp Delay(d),s/veh	63.6	0.0	42.9	40.7	33.9	64.4	69.3	39.4	28.6	46.4	1.3	1.3
LnGrp LOS	E		D	D	C	E	E	D	C	D	A	A
Approach Vol, veh/h		274			710			1210			2086	
Approach Delay, s/veh		63.0			54.7			39.7			16.1	
Approach LOS		E			D			D			B	

Timer	1	2	3	4	5	6	7	8
Assigned Phs	1	2	3	4	5	6		8
Phs Duration (G+Y+Rc), s	9.9	78.4	15.0	31.7	32.4	55.9		46.7
Change Period (Y+Rc), s	4.0	5.0	5.0	5.0	4.0	5.0		5.0
Max Green Setting (Gmax), s	18.0	56.0	15.0	27.0	30.0	44.0		47.0
Max Q Clear Time (g_c+I1), s	6.5	2.0	9.8	25.5	27.9	35.7		40.0
Green Ext Time (p_c), s	0.1	22.6	0.2	0.2	0.6	5.6		1.7

Intersection Summary	
HCM 2010 Ctrl Delay	32.2
HCM 2010 LOS	C

Notes

APPENDIX C

LEVEL OF SERVICE CALCULATIONS

- Base Year 2022 with Mitigation WE Peak

HCM 2010 Signalized Intersection Summary
1: Napilihau Street

08/09/2017

Movement	EBL	EBT	EBR	WBL	WBT	WBR	NBL	NBT	NBR	SBL	SBT	SBR
Lane Configurations												
Traffic Volume (veh/h)	40	45	330	45	50	20	270	310	40	20	280	90
Future Volume (veh/h)	40	45	330	45	50	20	270	310	40	20	280	90
Number	7	4	14	3	8	18	5	2	12	1	6	16
Initial Q (Qb), veh	0	0	0	0	0	0	0	0	0	0	0	0
Ped-Bike Adj(A_pbT)	0.99		0.99	0.99		0.99	1.00		1.00	1.00		1.00
Parking Bus, Adj	1.00	1.00	1.00	1.00	1.00	1.00	1.00	1.00	1.00	1.00	1.00	1.00
Adj Sat Flow, veh/h/ln	1900	1863	1863	1863	1863	1900	1863	1863	1863	1863	1863	1863
Adj Flow Rate, veh/h	43	49	35	49	54	10	293	337	22	22	304	28
Adj No. of Lanes	0	1	1	1	1	0	1	1	1	1	1	1
Peak Hour Factor	0.92	0.92	0.92	0.92	0.92	0.92	0.92	0.92	0.92	0.92	0.92	0.92
Percent Heavy Veh, %	2	2	2	2	2	2	2	2	2	2	2	2
Cap, veh/h	193	136	204	268	199	37	380	905	767	29	536	455
Arrive On Green	0.13	0.13	0.13	0.13	0.13	0.13	0.21	0.49	0.49	0.02	0.29	0.29
Sat Flow, veh/h	552	1045	1566	1298	1527	283	1774	1863	1580	1774	1863	1581
Grp Volume(v), veh/h	92	0	35	49	0	64	293	337	22	22	304	28
Grp Sat Flow(s),veh/h/ln	1596	0	1566	1298	0	1809	1774	1863	1580	1774	1863	1581
Q Serve(g_s), s	0.8	0.0	0.9	1.6	0.0	1.4	6.8	4.9	0.3	0.5	6.0	0.6
Cycle Q Clear(g_c), s	2.2	0.0	0.9	3.8	0.0	1.4	6.8	4.9	0.3	0.5	6.0	0.6
Prop In Lane	0.47		1.00	1.00		0.16	1.00		1.00	1.00		1.00
Lane Grp Cap(c), veh/h	330	0	204	268	0	236	380	905	767	29	536	455
V/C Ratio(X)	0.28	0.00	0.17	0.18	0.00	0.27	0.77	0.37	0.03	0.77	0.57	0.06
Avail Cap(c_a), veh/h	988	0	864	815	0	998	1224	3384	2870	612	2741	2326
HCM Platoon Ratio	1.00	1.00	1.00	1.00	1.00	1.00	1.00	1.00	1.00	1.00	1.00	1.00
Upstream Filter(I)	1.00	0.00	1.00	1.00	0.00	1.00	1.00	1.00	1.00	1.00	1.00	1.00
Uniform Delay (d), s/veh	17.4	0.0	16.8	19.2	0.0	17.0	16.1	7.0	5.8	21.3	13.2	11.2
Incr Delay (d2), s/veh	0.5	0.0	0.4	0.3	0.0	0.6	3.4	0.5	0.0	34.3	2.0	0.1
Initial Q Delay(d3),s/veh	0.0	0.0	0.0	0.0	0.0	0.0	0.0	0.0	0.0	0.0	0.0	0.0
%ile BackOfQ(50%),veh/ln	1.1	0.0	0.4	0.6	0.0	0.7	3.6	2.7	0.1	0.5	3.3	0.3
LnGrp Delay(d),s/veh	17.8	0.0	17.2	19.5	0.0	17.7	19.5	7.6	5.9	55.6	15.2	11.3
LnGrp LOS	B		B	B		B	B	A	A	E	B	B
Approach Vol, veh/h		127			113			652			354	
Approach Delay, s/veh		17.7			18.5			12.9			17.4	
Approach LOS		B			B			B			B	

Timer	1	2	3	4	5	6	7	8
Assigned Phs	1	2		4	5	6		8
Phs Duration (G+Y+Rc), s	5.7	27.1		10.7	14.3	18.5		10.7
Change Period (Y+Rc), s	5.0	6.0		5.0	5.0	6.0		5.0
Max Green Setting (Gmax), s	15.0	79.0		24.0	30.0	64.0		24.0
Max Q Clear Time (g_c+I1), s	2.5	6.9		4.2	8.8	8.0		5.8
Green Ext Time (p_c), s	0.0	4.8		0.5	0.8	4.2		0.4

Intersection Summary	
HCM 2010 Ctrl Delay	15.1
HCM 2010 LOS	B

Movement	EBL	EBT	EBR	WBL	WBT	WBR	NBL	NBT	NBR	SBL	SBT	SBR
Lane Configurations												
Traffic Volume (veh/h)	55	20	195	40	15	5	135	445	25	15	485	60
Future Volume (veh/h)	55	20	195	40	15	5	135	445	25	15	485	60
Number	7	4	14	3	8	18	5	2	12	1	6	16
Initial Q (Qb), veh	0	0	0	0	0	0	0	0	0	0	0	0
Ped-Bike Adj(A_pbT)	0.98		0.98	0.99		0.98	1.00		1.00	1.00		1.00
Parking Bus, Adj	1.00	1.00	1.00	1.00	1.00	1.00	1.00	1.00	1.00	1.00	1.00	1.00
Adj Sat Flow, veh/h/ln	1900	1863	1863	1863	1863	1900	1863	1863	1863	1863	1863	1863
Adj Flow Rate, veh/h	60	22	23	43	16	1	147	484	0	16	527	25
Adj No. of Lanes	0	1	1	1	1	0	1	1	1	1	1	1
Peak Hour Factor	0.92	0.92	0.92	0.92	0.92	0.92	0.92	0.92	0.92	0.92	0.92	0.92
Percent Heavy Veh, %	2	2	2	2	2	2	2	2	2	2	2	2
Cap, veh/h	291	84	232	310	259	16	443	854	726	436	721	611
Arrive On Green	0.15	0.15	0.15	0.15	0.15	0.15	0.08	0.46	0.00	0.01	0.39	0.39
Sat Flow, veh/h	954	564	1557	1337	1733	108	1774	1863	1583	1774	1863	1577
Grp Volume(v), veh/h	82	0	23	43	0	17	147	484	0	16	527	25
Grp Sat Flow(s),veh/h/ln	1518	0	1557	1337	0	1841	1774	1863	1583	1774	1863	1577
Q Serve(g_s), s	1.2	0.0	0.5	1.3	0.0	0.3	2.0	8.0	0.0	0.2	10.2	0.4
Cycle Q Clear(g_c), s	1.9	0.0	0.5	3.2	0.0	0.3	2.0	8.0	0.0	0.2	10.2	0.4
Prop In Lane	0.73		1.00	1.00		0.06	1.00		1.00	1.00		1.00
Lane Grp Cap(c), veh/h	375	0	232	310	0	275	443	854	726	436	721	611
V/C Ratio(X)	0.22	0.00	0.10	0.14	0.00	0.06	0.33	0.57	0.00	0.04	0.73	0.04
Avail Cap(c_a), veh/h	1030	0	925	905	0	1094	927	2258	1920	1047	2258	1912
HCM Platoon Ratio	1.00	1.00	1.00	1.00	1.00	1.00	1.00	1.00	1.00	1.00	1.00	1.00
Upstream Filter(I)	1.00	0.00	1.00	1.00	0.00	1.00	1.00	1.00	0.00	1.00	1.00	1.00
Uniform Delay (d), s/veh	16.0	0.0	15.5	17.5	0.0	15.4	7.9	8.3	0.0	8.0	11.0	8.0
Incr Delay (d2), s/veh	0.3	0.0	0.2	0.2	0.0	0.1	0.4	0.6	0.0	0.0	1.4	0.0
Initial Q Delay(d3),s/veh	0.0	0.0	0.0	0.0	0.0	0.0	0.0	0.0	0.0	0.0	0.0	0.0
%ile BackOfQ(50%),veh/ln	0.9	0.0	0.2	0.5	0.0	0.2	1.0	4.2	0.0	0.1	5.4	0.2
LnGrp Delay(d),s/veh	16.3	0.0	15.6	17.7	0.0	15.5	8.4	8.9	0.0	8.0	12.5	8.1
LnGrp LOS	B		B	B		B	A	A		A	B	A
Approach Vol, veh/h		105			60			631			568	
Approach Delay, s/veh		16.1			17.0			8.8			12.1	
Approach LOS		B			B			A			B	

Timer	1	2	3	4	5	6	7	8
Assigned Phs	1	2		4	5	6		8
Phs Duration (G+Y+Rc), s	5.5	25.3		11.3	8.5	22.3		11.3
Change Period (Y+Rc), s	5.0	6.0		5.0	5.0	6.0		5.0
Max Green Setting (Gmax), s	15.0	51.0		25.0	15.0	51.0		25.0
Max Q Clear Time (g_c+I1), s	2.2	10.0		3.9	4.0	12.2		5.2
Green Ext Time (p_c), s	0.0	3.3		0.4	0.3	3.8		0.1

Intersection Summary	
HCM 2010 Ctrl Delay	11.1
HCM 2010 LOS	B

Movement	EBL	EBT	EBR	WBL	WBT	WBR	NBL	NBT	NBR	SBL	SBT	SBR
Lane Configurations												
Traffic Volume (veh/h)	40	5	85	10	5	10	80	550	15	5	675	50
Future Volume (veh/h)	40	5	85	10	5	10	80	550	15	5	675	50
Number	7	4	14	3	8	18	5	2	12	1	6	16
Initial Q (Qb), veh	0	0	0	0	0	0	0	0	0	0	0	0
Ped-Bike Adj(A_pbT)	1.00		0.99	1.00		1.00	1.00		1.00	1.00		1.00
Parking Bus, Adj	1.00	1.00	1.00	1.00	1.00	1.00	1.00	1.00	1.00	1.00	1.00	1.00
Adj Sat Flow, veh/h/ln	1863	1863	1900	1863	1863	1863	1863	1863	1863	1863	1863	1863
Adj Flow Rate, veh/h	43	5	7	11	5	1	87	598	9	5	734	26
Adj No. of Lanes	1	1	0	1	1	1	1	1	1	1	1	1
Peak Hour Factor	0.92	0.92	0.92	0.92	0.92	0.92	0.92	0.92	0.92	0.92	0.92	0.92
Percent Heavy Veh, %	2	2	2	2	2	2	2	2	2	2	2	2
Cap, veh/h	61	78	110	20	166	141	115	1000	850	7	887	753
Arrive On Green	0.03	0.11	0.11	0.01	0.09	0.09	0.06	0.54	0.54	0.00	0.48	0.48
Sat Flow, veh/h	1774	700	980	1774	1863	1583	1774	1863	1583	1774	1863	1582
Grp Volume(v), veh/h	43	0	12	11	5	1	87	598	9	5	734	26
Grp Sat Flow(s),veh/h/ln	1774	0	1679	1774	1863	1583	1774	1863	1583	1774	1863	1582
Q Serve(g_s), s	1.4	0.0	0.4	0.4	0.1	0.0	2.9	13.0	0.2	0.2	20.3	0.5
Cycle Q Clear(g_c), s	1.4	0.0	0.4	0.4	0.1	0.0	2.9	13.0	0.2	0.2	20.3	0.5
Prop In Lane	1.00		0.58	1.00		1.00	1.00		1.00	1.00		1.00
Lane Grp Cap(c), veh/h	61	0	188	20	166	141	115	1000	850	7	887	753
V/C Ratio(X)	0.71	0.00	0.06	0.55	0.03	0.01	0.76	0.60	0.01	0.70	0.83	0.03
Avail Cap(c_a), veh/h	596	0	592	596	657	558	745	2033	1728	745	2033	1727
HCM Platoon Ratio	1.00	1.00	1.00	1.00	1.00	1.00	1.00	1.00	1.00	1.00	1.00	1.00
Upstream Filter(I)	1.00	0.00	1.00	1.00	1.00	1.00	1.00	1.00	1.00	1.00	1.00	1.00
Uniform Delay (d), s/veh	28.5	0.0	23.6	29.3	24.8	24.7	27.4	9.4	6.4	29.6	13.5	8.3
Incr Delay (d2), s/veh	14.1	0.0	0.1	22.0	0.1	0.0	9.7	0.6	0.0	81.2	2.0	0.0
Initial Q Delay(d3),s/veh	0.0	0.0	0.0	0.0	0.0	0.0	0.0	0.0	0.0	0.0	0.0	0.0
%ile BackOfQ(50%),veh/ln	0.9	0.0	0.2	0.3	0.1	0.0	1.7	6.8	0.1	0.2	10.7	0.2
LnGrp Delay(d),s/veh	42.6	0.0	23.8	51.3	24.8	24.7	37.1	10.0	6.4	110.8	15.5	8.3
LnGrp LOS	D		C	D	C	C	D	A	A	F	B	A
Approach Vol, veh/h		55			17			694			765	
Approach Delay, s/veh		38.5			42.0			13.3			15.9	
Approach LOS		D			D			B			B	

Timer	1	2	3	4	5	6	7	8
Assigned Phs	1	2	3	4	5	6	7	8
Phs Duration (G+Y+Rc), s	5.2	37.0	5.7	11.7	8.9	33.4	7.0	10.3
Change Period (Y+Rc), s	5.0	5.0	5.0	5.0	5.0	5.0	5.0	5.0
Max Green Setting (Gmax), s	25.0	65.0	20.0	21.0	25.0	65.0	20.0	21.0
Max Q Clear Time (g_c+I1), s	2.2	15.0	2.4	2.4	4.9	22.3	3.4	2.1
Green Ext Time (p_c), s	0.0	4.5	0.0	0.0	0.2	6.1	0.1	0.0

Intersection Summary	
HCM 2010 Ctrl Delay	15.8
HCM 2010 LOS	B

Movement	EBL	EBT	EBR	WBL	WBT	WBR	NBL	NBT	NBR	SBL	SBT	SBR
Lane Configurations												
Traffic Volume (veh/h)	50	10	595	10	0	5	410	595	5	0	730	50
Future Volume (veh/h)	50	10	595	10	0	5	410	595	5	0	730	50
Number	3	8	18	7	4	14	1	6	16	5	2	12
Initial Q (Qb), veh	0	0	0	0	0	0	0	0	0	0	0	0
Ped-Bike Adj(A_pbT)	1.00		1.00	1.00		1.00	1.00		1.00	1.00		1.00
Parking Bus, Adj	1.00	1.00	1.00	1.00	1.00	1.00	1.00	1.00	1.00	1.00	1.00	1.00
Adj Sat Flow, veh/h/ln	1900	1863	1863	1900	1863	1900	1863	1863	1900	1863	1863	1863
Adj Flow Rate, veh/h	54	11	0	11	0	1	446	647	5	0	793	17
Adj No. of Lanes	0	1	1	0	1	0	1	2	0	1	2	1
Peak Hour Factor	0.92	0.92	0.92	0.92	0.92	0.92	0.92	0.92	0.92	0.92	0.92	0.92
Percent Heavy Veh, %	2	2	2	2	2	2	2	2	2	2	2	2
Cap, veh/h	190	15	97	206	4	8	516	2695	21	3	1376	613
Arrive On Green	0.08	0.06	0.00	0.08	0.00	0.06	0.29	0.75	0.75	0.00	0.39	0.39
Sat Flow, veh/h	1239	252	1583	1407	67	134	1774	3600	28	1774	3539	1577
Grp Volume(v), veh/h	65	0	0	12	0	0	446	318	334	0	793	17
Grp Sat Flow(s),veh/h/ln	1491	0	1583	1608	0	0	1774	1770	1858	1774	1770	1577
Q Serve(g_s), s	2.0	0.0	0.0	0.0	0.0	0.0	13.8	3.2	3.2	0.0	10.2	0.4
Cycle Q Clear(g_c), s	2.4	0.0	0.0	0.4	0.0	0.0	13.8	3.2	3.2	0.0	10.2	0.4
Prop In Lane	0.83		1.00	0.92		0.08	1.00		0.01	1.00		1.00
Lane Grp Cap(c), veh/h	231	0	97	246	0	0	516	1325	1391	3	1376	613
V/C Ratio(X)	0.28	0.00	0.00	0.05	0.00	0.00	0.87	0.24	0.24	0.00	0.58	0.03
Avail Cap(c_a), veh/h	648	0	547	769	0	0	2176	2110	2215	2176	4219	1880
HCM Platoon Ratio	1.00	1.00	1.00	1.00	1.00	1.00	1.00	1.00	1.00	1.00	1.00	1.00
Upstream Filter(I)	1.00	0.00	0.00	1.00	0.00	0.00	1.00	1.00	1.00	0.00	1.00	1.00
Uniform Delay (d), s/veh	26.2	0.0	0.0	25.2	0.0	0.0	19.5	2.2	2.2	0.0	13.9	10.9
Incr Delay (d2), s/veh	0.7	0.0	0.0	0.1	0.0	0.0	1.7	0.2	0.2	0.0	0.8	0.0
Initial Q Delay(d3),s/veh	0.0	0.0	0.0	0.0	0.0	0.0	0.0	0.0	0.0	0.0	0.0	0.0
%ile BackOfQ(50%),veh/ln	1.0	0.0	0.0	0.2	0.0	0.0	6.9	1.6	1.7	0.0	5.1	0.2
LnGrp Delay(d),s/veh	26.8	0.0	0.0	25.3	0.0	0.0	21.2	2.4	2.4	0.0	14.7	11.0
LnGrp LOS	C			C			C	A	A		B	B
Approach Vol, veh/h		65			12			1098			810	
Approach Delay, s/veh		26.8			25.3			10.1			14.7	
Approach LOS		C			C			B			B	

Timer	1	2	3	4	5	6	7	8
Assigned Phs	1	2		4	5	6		8
Phs Duration (G+Y+Rc), s	20.8	28.5		8.6	0.0	49.3		8.6
Change Period (Y+Rc), s	4.0	6.0		5.0	4.0	6.0		5.0
Max Green Setting (Gmax), s	71.0	69.0		25.0	71.0	69.0		20.0
Max Q Clear Time (g_c+I1), s	15.8	12.2		2.4	0.0	5.2		4.4
Green Ext Time (p_c), s	1.0	10.3		0.0	0.0	7.0		0.1

Intersection Summary	
HCM 2010 Ctrl Delay	12.6
HCM 2010 LOS	B

Movement	EBL	EBT	EBR	WBL	WBT	WBR	NBL	NBT	NBR	SBL	SBT	SBR
Lane Configurations												
Traffic Volume (veh/h)	55	5	145	15	5	15	105	950	20	10	1295	65
Future Volume (veh/h)	55	5	145	15	5	15	105	950	20	10	1295	65
Number	3	8	18	7	4	14	1	6	16	5	2	12
Initial Q (Qb), veh	0	0	0	0	0	0	0	0	0	0	0	0
Ped-Bike Adj(A_pbT)	0.98		1.00	0.98		0.98	1.00		1.00	1.00		1.00
Parking Bus, Adj	1.00	1.00	1.00	1.00	1.00	1.00	1.00	1.00	1.00	1.00	1.00	1.00
Adj Sat Flow, veh/h/ln	1900	1863	1863	1900	1863	1900	1863	1863	1900	1863	1863	1863
Adj Flow Rate, veh/h	60	5	-3	16	5	1	114	1033	21	11	1408	38
Adj No. of Lanes	0	1	1	0	1	0	1	2	0	1	2	1
Peak Hour Factor	0.92	0.92	0.92	0.92	0.92	0.92	0.92	0.92	0.92	0.92	0.92	0.92
Percent Heavy Veh, %	2	2	2	2	2	2	2	2	2	2	2	2
Cap, veh/h	215	14	143	181	45	7	146	2497	51	15	2228	994
Arrive On Green	0.10	0.09	0.00	0.10	0.09	0.09	0.08	0.70	0.70	0.01	0.63	0.63
Sat Flow, veh/h	1294	150	1583	1030	499	73	1774	3548	72	1774	3539	1580
Grp Volume(v), veh/h	65	0	-3	22	0	0	114	515	539	11	1408	38
Grp Sat Flow(s),veh/h/ln	1444	0	1583	1601	0	0	1774	1770	1850	1774	1770	1580
Q Serve(g_s), s	2.1	0.0	0.0	0.0	0.0	0.0	4.5	8.6	8.6	0.4	17.3	0.6
Cycle Q Clear(g_c), s	2.9	0.0	0.0	0.8	0.0	0.0	4.5	8.6	8.6	0.4	17.3	0.6
Prop In Lane	0.92		1.00	0.73		0.05	1.00		0.04	1.00		1.00
Lane Grp Cap(c), veh/h	249	0	143	255	0	0	146	1245	1302	15	2228	994
V/C Ratio(X)	0.26	0.00	-0.02	0.09	0.00	0.00	0.78	0.41	0.41	0.75	0.63	0.04
Avail Cap(c_a), veh/h	578	0	514	602	0	0	526	2149	2247	276	3798	1695
HCM Platoon Ratio	1.00	1.00	1.00	1.00	1.00	1.00	1.00	1.00	1.00	1.00	1.00	1.00
Upstream Filter(I)	1.00	0.00	0.00	1.00	0.00	0.00	1.00	1.00	1.00	1.00	1.00	1.00
Uniform Delay (d), s/veh	30.1	0.0	0.0	29.3	0.0	0.0	31.9	4.4	4.4	35.0	8.1	5.0
Incr Delay (d2), s/veh	0.2	0.0	0.0	0.1	0.0	0.0	3.4	0.5	0.5	24.5	0.6	0.0
Initial Q Delay(d3),s/veh	0.0	0.0	0.0	0.0	0.0	0.0	0.0	0.0	0.0	0.0	0.0	0.0
%ile BackOfQ(50%),veh/ln	1.2	0.0	0.0	0.4	0.0	0.0	2.3	4.3	4.5	0.3	8.6	0.3
LnGrp Delay(d),s/veh	30.3	0.0	0.0	29.4	0.0	0.0	35.2	4.9	4.8	59.6	8.7	5.0
LnGrp LOS	C			C			D	A	A	E	A	A
Approach Vol, veh/h		62			22			1168			1457	
Approach Delay, s/veh		31.8			29.4			7.8			9.0	
Approach LOS		C			C			A			A	

Timer	1	2	3	4	5	6	7	8
Assigned Phs	1	2		4	5	6		8
Phs Duration (G+Y+Rc), s	9.8	49.6		11.4	4.6	54.8		11.4
Change Period (Y+Rc), s	4.0	5.0		5.0	4.0	5.0		5.0
Max Green Setting (Gmax), s	21.0	76.0		23.0	11.0	86.0		23.0
Max Q Clear Time (g_c+I1), s	6.5	19.3		2.8	2.4	10.6		4.9
Green Ext Time (p_c), s	0.1	25.3		0.0	0.0	14.4		0.1

Intersection Summary	
HCM 2010 Ctrl Delay	9.2
HCM 2010 LOS	A

Movement	EBL	EBT	EBR	WBL	WBT	WBR	NBL	NBT	NBR	SBL	SBT	SBR
Lane Configurations												
Traffic Volume (veh/h)	60	5	180	45	5	35	110	1025	50	30	1375	75
Future Volume (veh/h)	60	5	180	45	5	35	110	1025	50	30	1375	75
Number	3	8	18	7	4	14	1	6	16	5	2	12
Initial Q (Qb), veh	0	0	0	0	0	0	0	0	0	0	0	0
Ped-Bike Adj(A_pbT)	1.00		1.00	1.00		1.00	1.00		1.00	1.00		1.00
Parking Bus, Adj	1.00	1.00	1.00	1.00	1.00	1.00	1.00	1.00	1.00	1.00	1.00	1.00
Adj Sat Flow, veh/h/ln	1900	1863	1863	1863	1863	1900	1863	1863	1863	1863	1863	1863
Adj Flow Rate, veh/h	65	5	12	49	5	2	120	1114	34	33	1495	45
Adj No. of Lanes	0	1	1	1	1	0	1	2	1	1	2	1
Peak Hour Factor	0.92	0.92	0.92	0.92	0.92	0.92	0.92	0.92	0.92	0.92	0.92	0.92
Percent Heavy Veh, %	2	2	2	2	2	2	2	2	2	2	2	2
Cap, veh/h	275	18	232	230	186	75	154	2255	1009	57	2062	922
Arrive On Green	0.16	0.15	0.15	0.15	0.15	0.15	0.09	0.64	0.64	0.03	0.58	0.58
Sat Flow, veh/h	1293	121	1577	1386	1265	506	1774	3539	1583	1774	3539	1583
Grp Volume(v), veh/h	70	0	12	49	0	7	120	1114	34	33	1495	45
Grp Sat Flow(s),veh/h/ln	1415	0	1577	1386	0	1771	1774	1770	1583	1774	1770	1583
Q Serve(g_s), s	3.4	0.0	0.5	2.7	0.0	0.3	5.4	13.6	0.7	1.5	25.0	1.0
Cycle Q Clear(g_c), s	3.6	0.0	0.5	6.3	0.0	0.3	5.4	13.6	0.7	1.5	25.0	1.0
Prop In Lane	0.93		1.00	1.00		0.29	1.00		1.00	1.00		1.00
Lane Grp Cap(c), veh/h	311	0	232	230	0	261	154	2255	1009	57	2062	922
V/C Ratio(X)	0.23	0.00	0.05	0.21	0.00	0.03	0.78	0.49	0.03	0.58	0.73	0.05
Avail Cap(c_a), veh/h	519	0	463	433	0	520	456	2986	1336	260	2596	1162
HCM Platoon Ratio	1.00	1.00	1.00	1.00	1.00	1.00	1.00	1.00	1.00	1.00	1.00	1.00
Upstream Filter(I)	1.00	0.00	1.00	1.00	0.00	1.00	1.00	1.00	1.00	1.00	1.00	1.00
Uniform Delay (d), s/veh	30.9	0.0	30.0	34.1	0.0	29.9	36.6	7.9	5.5	39.0	12.3	7.3
Incr Delay (d2), s/veh	0.4	0.0	0.1	0.5	0.0	0.0	3.2	0.4	0.0	3.4	1.2	0.0
Initial Q Delay(d3),s/veh	0.0	0.0	0.0	0.0	0.0	0.0	0.0	0.0	0.0	0.0	0.0	0.0
%ile BackOfQ(50%),veh/ln	1.4	0.0	0.2	1.1	0.0	0.1	2.8	6.6	0.3	0.8	12.4	0.4
LnGrp Delay(d),s/veh	31.3	0.0	30.1	34.6	0.0	29.9	39.8	8.2	5.5	42.4	13.6	7.4
LnGrp LOS	C		C	C		C	D	A	A	D	B	A
Approach Vol, veh/h		82			56			1268			1573	
Approach Delay, s/veh		31.1			34.0			11.1			14.0	
Approach LOS		C			C			B			B	

Timer	1	2	3	4	5	6	7	8
Assigned Phs	1	2		4	5	6		8
Phs Duration (G+Y+Rc), s	11.1	53.6		17.0	6.6	58.1		17.0
Change Period (Y+Rc), s	4.0	6.0		5.0	4.0	6.0		5.0
Max Green Setting (Gmax), s	21.0	60.0		24.0	12.0	69.0		24.0
Max Q Clear Time (g_c+I1), s	7.4	27.0		8.3	3.5	15.6		5.6
Green Ext Time (p_c), s	0.2	20.7		0.1	0.0	17.1		0.2

Intersection Summary	
HCM 2010 Ctrl Delay	13.6
HCM 2010 LOS	B

Movement	EBL	EBT	EBR	WBL	WBT	WBR	NBL	NBT	NBR	SBL	SBT	SBR
Lane Configurations												
Traffic Volume (veh/h)	235	5	445	15	5	20	290	1150	15	55	1380	155
Future Volume (veh/h)	235	5	445	15	5	20	290	1150	15	55	1380	155
Number	3	8	18	7	4	14	1	6	16	5	2	12
Initial Q (Qb), veh	0	0	0	0	0	0	0	0	0	0	0	0
Ped-Bike Adj(A_pbT)	1.00		1.00	1.00		1.00	1.00		1.00	1.00		1.00
Parking Bus, Adj	1.00	1.00	1.00	1.00	1.00	1.00	1.00	1.00	1.00	1.00	1.00	1.00
Adj Sat Flow, veh/h/ln	1863	1863	1863	1900	1863	1900	1863	1863	1900	1863	1863	1863
Adj Flow Rate, veh/h	259	0	268	16	5	7	315	1250	16	60	1500	134
Adj No. of Lanes	2	0	2	0	1	0	2	2	0	1	2	1
Peak Hour Factor	0.92	0.92	0.92	0.92	0.92	0.92	0.92	0.92	0.92	0.92	0.92	0.92
Percent Heavy Veh, %	2	2	2	2	2	2	2	2	2	2	2	2
Cap, veh/h	448	0	782	51	16	22	445	2214	28	119	1970	1067
Arrive On Green	0.13	0.00	0.12	0.05	0.05	0.03	0.13	0.62	0.60	0.07	0.56	0.56
Sat Flow, veh/h	3548	0	3167	992	310	434	3442	3578	46	1774	3539	1582
Grp Volume(v), veh/h	259	0	268	28	0	0	315	618	648	60	1500	134
Grp Sat Flow(s),veh/h/ln	1774	0	1583	1737	0	0	1721	1770	1855	1774	1770	1582
Q Serve(g_s), s	8.1	0.0	8.1	1.8	0.0	0.0	10.3	23.9	24.0	3.8	38.2	3.5
Cycle Q Clear(g_c), s	8.1	0.0	8.1	1.8	0.0	0.0	10.3	23.9	24.0	3.8	38.2	3.5
Prop In Lane	1.00		1.00	0.57		0.25	1.00		0.02	1.00		1.00
Lane Grp Cap(c), veh/h	448	0	782	89	0	0	445	1095	1148	119	1970	1067
V/C Ratio(X)	0.58	0.00	0.34	0.32	0.00	0.00	0.71	0.56	0.56	0.50	0.76	0.13
Avail Cap(c_a), veh/h	1031	0	1302	460	0	0	1706	2934	3075	227	4567	2228
HCM Platoon Ratio	1.00	1.00	1.00	1.00	1.00	1.00	1.00	1.00	1.00	1.00	1.00	1.00
Upstream Filter(I)	1.00	0.00	1.00	1.00	0.00	0.00	1.00	1.00	1.00	1.00	1.00	1.00
Uniform Delay (d), s/veh	48.2	0.0	36.3	53.9	0.0	0.0	48.8	13.1	13.1	52.7	20.0	6.8
Incr Delay (d2), s/veh	0.4	0.0	0.1	0.7	0.0	0.0	0.8	0.7	0.6	1.2	0.9	0.1
Initial Q Delay(d3),s/veh	0.0	0.0	0.0	0.0	0.0	0.0	0.0	0.0	0.0	0.0	0.0	0.0
%ile BackOfQ(50%),veh/ln	4.0	0.0	3.6	0.9	0.0	0.0	4.9	11.9	12.4	1.9	18.8	2.1
LnGrp Delay(d),s/veh	48.6	0.0	36.4	54.7	0.0	0.0	49.6	13.7	13.7	53.9	20.8	6.9
LnGrp LOS	D		D	D			D	B	B	D	C	A
Approach Vol, veh/h		527			28			1581			1694	
Approach Delay, s/veh		42.4			54.7			20.9			20.9	
Approach LOS		D			D			C			C	

Timer	1	2	3	4	5	6	7	8
Assigned Phs	1	2		4	5	6		8
Phs Duration (G+Y+Rc), s	19.1	69.1		10.0	11.9	76.4		18.8
Change Period (Y+Rc), s	6.0	6.0		7.0	6.0	6.0		7.0
Max Green Setting (Gmax), s	56.0	149.0		28.0	13.0	192.0		31.0
Max Q Clear Time (g_c+I1), s	12.3	40.2		3.8	5.8	26.0		10.1
Green Ext Time (p_c), s	0.9	23.0		0.0	0.0	12.5		1.6

Intersection Summary	
HCM 2010 Ctrl Delay	24.1
HCM 2010 LOS	C

Notes

Movement	EBL	EBT	EBR	WBL	WBT	WBR	NBL	NBT	NBR	SBL	SBT	SBR
Lane Configurations												
Traffic Volume (veh/h)	5	0	5	135	5	60	5	1330	90	90	1810	10
Future Volume (veh/h)	5	0	5	135	5	60	5	1330	90	90	1810	10
Number	3	8	18	7	4	14	1	6	16	5	2	12
Initial Q (Qb), veh	0	0	0	0	0	0	0	0	0	0	0	0
Ped-Bike Adj(A_pbT)	1.00		1.00	1.00		1.00	1.00		1.00	1.00		1.00
Parking Bus, Adj	1.00	1.00	1.00	1.00	1.00	1.00	1.00	1.00	1.00	1.00	1.00	1.00
Adj Sat Flow, veh/h/ln	1900	1863	1900	1863	1863	1900	1863	1863	1900	1863	1863	1900
Adj Flow Rate, veh/h	5	0	1	147	5	5	5	1446	95	98	1967	11
Adj No. of Lanes	0	1	0	1	1	0	1	2	0	1	2	0
Peak Hour Factor	0.92	0.92	0.92	0.92	0.92	0.92	0.92	0.92	0.92	0.92	0.92	0.92
Percent Heavy Veh, %	2	2	2	2	2	2	2	2	2	2	2	2
Cap, veh/h	194	5	30	234	107	107	11	2402	157	124	2800	16
Arrive On Green	0.13	0.00	0.12	0.13	0.13	0.12	0.01	0.95	0.94	0.07	0.78	0.77
Sat Flow, veh/h	1140	37	235	1410	856	856	1774	3373	221	1774	3609	20
Grp Volume(v), veh/h	6	0	0	147	0	10	5	756	785	98	964	1014
Grp Sat Flow(s),veh/h/ln	1412	0	0	1410	0	1712	1774	1770	1824	1774	1770	1859
Q Serve(g_s), s	0.0	0.0	0.0	12.4	0.0	0.7	0.4	6.8	7.0	7.1	34.8	35.0
Cycle Q Clear(g_c), s	0.7	0.0	0.0	13.0	0.0	0.7	0.4	6.8	7.0	7.1	34.8	35.0
Prop In Lane	0.83		0.17	1.00		0.50	1.00		0.12	1.00		0.01
Lane Grp Cap(c), veh/h	228	0	0	234	0	215	11	1260	1299	124	1373	1443
V/C Ratio(X)	0.03	0.00	0.00	0.63	0.00	0.05	0.44	0.60	0.60	0.79	0.70	0.70
Avail Cap(c_a), veh/h	312	0	0	318	0	316	150	1260	1299	150	1373	1443
HCM Platoon Ratio	1.00	1.00	1.00	1.00	1.00	1.00	1.33	1.33	1.33	1.00	1.00	1.00
Upstream Filter(I)	1.00	0.00	0.00	1.00	0.00	1.00	0.83	0.83	0.83	1.00	1.00	1.00
Uniform Delay (d), s/veh	50.0	0.0	0.0	55.3	0.0	50.2	64.2	1.2	1.2	59.5	7.2	7.2
Incr Delay (d2), s/veh	0.0	0.0	0.0	2.8	0.0	0.1	8.2	1.8	1.7	16.7	3.0	2.9
Initial Q Delay(d3),s/veh	0.0	0.0	0.0	0.0	0.0	0.0	0.0	0.0	0.0	0.0	0.0	0.0
%ile BackOfQ(50%),veh/ln	0.2	0.0	0.0	5.3	0.0	0.3	0.2	3.3	3.8	4.1	17.7	18.9
LnGrp Delay(d),s/veh	50.0	0.0	0.0	58.1	0.0	50.3	72.4	2.9	2.9	76.2	10.2	10.1
LnGrp LOS	D			E		D	E	A	A	E	B	B
Approach Vol, veh/h		6			157			1546			2076	
Approach Delay, s/veh		50.0			57.6			3.2			13.3	
Approach LOS		D			E			A			B	

Timer	1	2	3	4	5	6	7	8
Assigned Phs	1	2		4	5	6		8
Phs Duration (G+Y+Rc), s	4.8	104.9		20.3	13.1	96.6		20.3
Change Period (Y+Rc), s	4.0	5.0		5.0	4.0	5.0		5.0
Max Green Setting (Gmax), s	11.0	82.0		23.0	11.0	82.0		23.0
Max Q Clear Time (g_c+I1), s	2.4	37.0		15.0	9.1	9.0		2.7
Green Ext Time (p_c), s	0.0	34.6		0.3	0.0	30.2		0.0

Intersection Summary	
HCM 2010 Ctrl Delay	11.0
HCM 2010 LOS	B

Movement	EBL	EBT	EBR	WBL	WBT	WBR	NBL	NBT	NBR	SBL	SBT	SBR
Lane Configurations												
Traffic Volume (veh/h)	135	5	15	65	5	15	15	1275	15	10	1595	260
Future Volume (veh/h)	135	5	15	65	5	15	15	1275	15	10	1595	260
Number	3	8	18	7	4	14	1	6	16	5	2	12
Initial Q (Qb), veh	0	0	0	0	0	0	0	0	0	0	0	0
Ped-Bike Adj(A_pbT)	1.00		1.00	1.00		1.00	1.00		1.00	1.00		1.00
Parking Bus, Adj	1.00	1.00	1.00	1.00	1.00	1.00	1.00	1.00	1.00	1.00	1.00	1.00
Adj Sat Flow, veh/h/ln	1900	1863	1900	1900	1863	1900	1863	1863	1900	1863	1863	1863
Adj Flow Rate, veh/h	147	5	13	71	5	9	16	1386	15	11	1734	207
Adj No. of Lanes	0	1	0	0	1	0	1	2	0	1	2	1
Peak Hour Factor	0.92	0.92	0.92	0.92	0.92	0.92	0.92	0.92	0.92	0.92	0.92	0.92
Percent Heavy Veh, %	2	2	2	2	2	2	2	2	2	2	2	2
Cap, veh/h	228	6	16	226	17	23	19	2757	30	13	2709	1211
Arrive On Green	0.13	0.13	0.12	0.13	0.13	0.12	0.01	0.52	0.51	0.01	0.77	0.77
Sat Flow, veh/h	1339	46	118	1336	132	174	1774	3587	39	1774	3539	1582
Grp Volume(v), veh/h	165	0	0	85	0	0	16	684	717	11	1734	207
Grp Sat Flow(s),veh/h/ln	1503	0	0	1642	0	0	1774	1770	1856	1774	1770	1582
Q Serve(g_s), s	7.8	0.0	0.0	0.0	0.0	0.0	1.2	32.9	32.9	0.8	29.3	4.6
Cycle Q Clear(g_c), s	13.7	0.0	0.0	5.9	0.0	0.0	1.2	32.9	32.9	0.8	29.3	4.6
Prop In Lane	0.89		0.08	0.84		0.11	1.00		0.02	1.00		1.00
Lane Grp Cap(c), veh/h	250	0	0	267	0	0	19	1360	1427	13	2709	1211
V/C Ratio(X)	0.66	0.00	0.00	0.32	0.00	0.00	0.84	0.50	0.50	0.82	0.64	0.17
Avail Cap(c_a), veh/h	347	0	0	365	0	0	109	1360	1427	109	2709	1211
HCM Platoon Ratio	1.00	1.00	1.00	1.00	1.00	1.00	0.67	0.67	0.67	1.00	1.00	1.00
Upstream Filter(I)	1.00	0.00	0.00	1.00	0.00	0.00	0.77	0.77	0.77	0.62	0.62	0.62
Uniform Delay (d), s/veh	54.8	0.0	0.0	51.7	0.0	0.0	64.4	15.3	15.3	64.4	7.0	4.1
Incr Delay (d2), s/veh	3.0	0.0	0.0	0.7	0.0	0.0	23.5	1.0	1.0	23.6	0.7	0.2
Initial Q Delay(d3),s/veh	0.0	0.0	0.0	0.0	0.0	0.0	0.0	0.0	0.0	0.0	0.0	0.0
%ile BackOfQ(50%),veh/ln	6.0	0.0	0.0	2.8	0.0	0.0	0.7	16.4	17.2	0.5	14.2	2.0
LnGrp Delay(d),s/veh	57.7	0.0	0.0	52.3	0.0	0.0	87.9	16.3	16.3	88.0	7.7	4.3
LnGrp LOS	E			D			F	B	B	F	A	A
Approach Vol, veh/h		165			85			1417			1952	
Approach Delay, s/veh		57.7			52.3			17.1			7.8	
Approach LOS		E			D			B			A	

Timer	1	2	3	4	5	6	7	8
Assigned Phs	1	2		4	5	6		8
Phs Duration (G+Y+Rc), s	5.4	103.5		21.1	5.0	103.9		21.1
Change Period (Y+Rc), s	4.0	5.0		5.0	4.0	5.0		5.0
Max Green Setting (Gmax), s	8.0	83.0		25.0	8.0	83.0		25.0
Max Q Clear Time (g_c+I1), s	3.2	31.3		7.9	2.8	34.9		15.7
Green Ext Time (p_c), s	0.0	42.2		0.2	0.0	28.5		0.4

Intersection Summary	
HCM 2010 Ctrl Delay	14.8
HCM 2010 LOS	B

Movement	EBL	EBT	EBR	WBL	WBT	WBR	NBL	NBT	NBR	SBL	SBT	SBR
Lane Configurations												
Traffic Volume (veh/h)	190	20	50	90	20	20	60	1305	60	15	1605	130
Future Volume (veh/h)	190	20	50	90	20	20	60	1305	60	15	1605	130
Number	3	8	18	7	4	14	1	6	16	5	2	12
Initial Q (Qb), veh	0	0	0	0	0	0	0	0	0	0	0	0
Ped-Bike Adj(A_pbT)	1.00		1.00	1.00		1.00	1.00		0.99	1.00		1.00
Parking Bus, Adj	1.00	1.00	1.00	1.00	1.00	1.00	1.00	1.00	1.00	1.00	1.00	1.00
Adj Sat Flow, veh/h/ln	1900	1863	1863	1863	1863	1900	1863	1863	1900	1863	1863	1900
Adj Flow Rate, veh/h	207	22	11	98	22	2	65	1418	63	16	1745	137
Adj No. of Lanes	0	1	1	1	1	0	1	2	0	1	2	0
Peak Hour Factor	0.92	0.92	0.92	0.92	0.92	0.92	0.92	0.92	0.92	0.92	0.92	0.92
Percent Heavy Veh, %	2	2	2	2	2	2	2	2	2	2	2	2
Cap, veh/h	286	25	305	373	326	30	83	2428	108	19	2221	172
Arrive On Green	0.19	0.19	0.19	0.19	0.19	0.19	0.06	0.94	0.93	0.02	1.00	1.00
Sat Flow, veh/h	1205	128	1576	1380	1682	153	1774	3451	153	1774	3328	258
Grp Volume(v), veh/h	229	0	11	98	0	24	65	726	755	16	918	964
Grp Sat Flow(s),veh/h/ln	1333	0	1576	1380	0	1835	1774	1770	1835	1774	1770	1817
Q Serve(g_s), s	20.6	0.0	0.7	0.0	0.0	1.4	4.7	7.6	7.7	1.2	0.0	0.0
Cycle Q Clear(g_c), s	22.0	0.0	0.7	6.5	0.0	1.4	4.7	7.6	7.7	1.2	0.0	0.0
Prop In Lane	0.90		1.00	1.00		0.08	1.00		0.08	1.00		0.14
Lane Grp Cap(c), veh/h	311	0	305	373	0	355	83	1245	1291	19	1181	1213
V/C Ratio(X)	0.74	0.00	0.04	0.26	0.00	0.07	0.79	0.58	0.59	0.84	0.78	0.79
Avail Cap(c_a), veh/h	331	0	327	393	0	381	109	1245	1291	109	1181	1213
HCM Platoon Ratio	1.00	1.00	1.00	1.00	1.00	1.00	1.33	1.33	1.33	2.00	2.00	2.00
Upstream Filter(I)	1.00	0.00	1.00	1.00	0.00	1.00	0.64	0.64	0.64	0.70	0.70	0.70
Uniform Delay (d), s/veh	51.8	0.0	42.6	44.9	0.0	42.9	60.3	1.5	1.5	63.5	0.0	0.0
Incr Delay (d2), s/veh	7.9	0.0	0.0	0.4	0.0	0.1	11.6	1.3	1.2	21.7	3.6	3.8
Initial Q Delay(d3),s/veh	0.0	0.0	0.0	0.0	0.0	0.0	0.0	0.0	0.0	0.0	0.0	0.0
%ile BackOfQ(50%),veh/ln	8.7	0.0	0.3	3.1	0.0	0.7	2.6	3.6	4.0	0.7	1.2	1.3
LnGrp Delay(d),s/veh	59.7	0.0	42.6	45.3	0.0	42.9	71.9	2.8	2.8	85.2	3.6	3.8
LnGrp LOS	E		D	D		D	E	A	A	F	A	A
Approach Vol, veh/h		240			122			1546			1898	
Approach Delay, s/veh		58.9			44.8			5.7			4.4	
Approach LOS		E			D			A			A	

Timer	1	2	3	4	5	6	7	8
Assigned Phs	1	2		4	5	6		8
Phs Duration (G+Y+Rc), s	10.1	90.8		29.2	5.4	95.4		29.2
Change Period (Y+Rc), s	4.0	5.0		5.0	4.0	5.0		5.0
Max Green Setting (Gmax), s	8.0	82.0		26.0	8.0	82.0		26.0
Max Q Clear Time (g_c+I1), s	6.7	2.0		8.5	3.2	9.7		24.0
Green Ext Time (p_c), s	0.0	47.6		0.4	0.0	27.7		0.2

Intersection Summary	
HCM 2010 Ctrl Delay	9.7
HCM 2010 LOS	A

Notes

Movement	EBL	EBT	EBR	WBL	WBT	WBR	NBL	NBT	NBR	SBL	SBT	SBR
Lane Configurations												
Traffic Volume (veh/h)	60	150	90	145	130	650	80	715	195	570	950	100
Future Volume (veh/h)	60	150	90	145	130	650	80	715	195	570	950	100
Number	7	4	14	3	8	18	1	6	16	5	2	12
Initial Q (Qb), veh	0	0	0	0	0	0	0	0	0	0	0	0
Ped-Bike Adj(A_pbT)	0.98		0.95	1.00		0.97	1.00		0.99	1.00		1.00
Parking Bus, Adj	1.00	1.00	1.00	1.00	1.00	1.00	1.00	1.00	1.00	1.00	1.00	1.00
Adj Sat Flow, veh/h/ln	1900	1863	1863	1863	1863	1863	1863	1863	1863	1863	1863	1900
Adj Flow Rate, veh/h	65	163	10	158	141	317	87	777	127	620	1033	104
Adj No. of Lanes	0	1	1	1	1	1	1	2	1	2	2	0
Peak Hour Factor	0.92	0.92	0.92	0.92	0.92	0.92	0.92	0.92	0.92	0.92	0.92	0.92
Percent Heavy Veh, %	2	2	2	2	2	2	2	2	2	2	2	2
Cap, veh/h	100	195	266	253	560	463	110	1423	628	706	1771	178
Arrive On Green	0.18	0.18	0.18	0.09	0.30	0.30	0.06	0.40	0.40	0.07	0.18	0.18
Sat Flow, veh/h	367	1109	1511	1774	1863	1541	1774	3539	1562	3442	3247	327
Grp Volume(v), veh/h	228	0	10	158	141	317	87	777	127	620	563	574
Grp Sat Flow(s),veh/h/ln	1476	0	1511	1774	1863	1541	1774	1770	1562	1721	1770	1805
Q Serve(g_s), s	17.1	0.0	0.7	9.1	7.4	23.6	6.3	21.9	6.9	23.2	37.9	37.9
Cycle Q Clear(g_c), s	19.4	0.0	0.7	9.1	7.4	23.6	6.3	21.9	6.9	23.2	37.9	37.9
Prop In Lane	0.29		1.00	1.00		1.00	1.00		1.00	1.00		0.18
Lane Grp Cap(c), veh/h	296	0	266	253	560	463	110	1423	628	706	965	984
V/C Ratio(X)	0.77	0.00	0.04	0.62	0.25	0.68	0.79	0.55	0.20	0.88	0.58	0.58
Avail Cap(c_a), veh/h	330	0	302	279	630	521	328	1423	628	953	965	984
HCM Platoon Ratio	1.00	1.00	1.00	1.00	1.00	1.00	1.00	1.00	1.00	0.33	0.33	0.33
Upstream Filter(I)	1.00	0.00	1.00	1.00	1.00	1.00	0.79	0.79	0.79	0.52	0.52	0.52
Uniform Delay (d), s/veh	51.8	0.0	44.4	38.5	34.4	40.0	60.2	29.8	25.3	59.0	39.8	39.8
Incr Delay (d2), s/veh	9.7	0.0	0.1	3.7	0.2	3.2	3.8	1.2	0.6	3.2	1.3	1.3
Initial Q Delay(d3),s/veh	0.0	0.0	0.0	0.0	0.0	0.0	0.0	0.0	0.0	0.0	0.0	0.0
%ile BackOfQ(50%),veh/ln	8.8	0.0	0.3	4.6	3.9	10.4	3.2	10.9	3.1	11.4	19.0	19.4
LnGrp Delay(d),s/veh	61.5	0.0	44.5	42.2	34.6	43.2	64.0	31.0	25.9	62.2	41.1	41.1
LnGrp LOS	E		D	D	C	D	E	C	C	E	D	D
Approach Vol, veh/h		238			616			991			1757	
Approach Delay, s/veh		60.8			41.0			33.2			48.6	
Approach LOS		E			D			C			D	

Timer	1	2	3	4	5	6	7	8
Assigned Phs	1	2	3	4	5	6		8
Phs Duration (G+Y+Rc), s	12.0	74.9	16.1	26.9	30.7	56.3		43.1
Change Period (Y+Rc), s	4.0	5.0	5.0	5.0	4.0	5.0		5.0
Max Green Setting (Gmax), s	24.0	49.0	13.0	25.0	36.0	37.0		43.0
Max Q Clear Time (g_c+I1), s	8.3	39.9	11.1	21.4	25.2	23.9		25.6
Green Ext Time (p_c), s	0.1	5.9	0.1	0.3	1.4	6.5		2.0

Intersection Summary	
HCM 2010 Ctrl Delay	43.9
HCM 2010 LOS	D

Notes

APPENDIX C

LEVEL OF SERVICE CALCULATIONS

- Base Year 2027 AM Peak

Movement	EBL	EBT	EBR	WBL	WBT	WBR	NBL	NBT	NBR	SBL	SBT	SBR
Lane Configurations												
Traffic Volume (veh/h)	50	45	295	90	50	20	220	255	100	10	205	30
Future Volume (veh/h)	50	45	295	90	50	20	220	255	100	10	205	30
Number	7	4	14	3	8	18	5	2	12	1	6	16
Initial Q (Qb), veh	0	0	0	0	0	0	0	0	0	0	0	0
Ped-Bike Adj(A_pbT)	0.99		0.99	0.99		0.99	1.00		1.00	1.00		1.00
Parking Bus, Adj	1.00	1.00	1.00	1.00	1.00	1.00	1.00	1.00	1.00	1.00	1.00	1.00
Adj Sat Flow, veh/h/ln	1900	1863	1863	1863	1863	1900	1863	1863	1863	1863	1863	1863
Adj Flow Rate, veh/h	54	49	38	98	54	10	239	277	54	11	223	9
Adj No. of Lanes	0	1	1	1	1	0	1	1	1	1	1	1
Peak Hour Factor	0.92	0.92	0.92	0.92	0.92	0.92	0.92	0.92	0.92	0.92	0.92	0.92
Percent Heavy Veh, %	2	2	2	2	2	2	2	2	2	2	2	2
Cap, veh/h	239	164	257	328	250	46	320	790	671	15	470	399
Arrive On Green	0.16	0.16	0.16	0.16	0.16	0.16	0.18	0.42	0.42	0.01	0.25	0.25
Sat Flow, veh/h	614	998	1569	1296	1527	283	1774	1863	1583	1774	1863	1583
Grp Volume(v), veh/h	103	0	38	98	0	64	239	277	54	11	223	9
Grp Sat Flow(s),veh/h/ln	1612	0	1569	1296	0	1810	1774	1863	1583	1774	1863	1583
Q Serve(g_s), s	0.5	0.0	0.8	2.9	0.0	1.2	5.1	4.0	0.8	0.2	4.0	0.2
Cycle Q Clear(g_c), s	2.0	0.0	0.8	4.9	0.0	1.2	5.1	4.0	0.8	0.2	4.0	0.2
Prop In Lane	0.52		1.00	1.00		0.16	1.00		1.00	1.00		1.00
Lane Grp Cap(c), veh/h	403	0	257	328	0	297	320	790	671	15	470	399
V/C Ratio(X)	0.26	0.00	0.15	0.30	0.00	0.22	0.75	0.35	0.08	0.72	0.47	0.02
Avail Cap(c_a), veh/h	1079	0	949	899	0	1095	1342	3710	3153	671	3005	2555
HCM Platoon Ratio	1.00	1.00	1.00	1.00	1.00	1.00	1.00	1.00	1.00	1.00	1.00	1.00
Upstream Filter(I)	1.00	0.00	1.00	1.00	0.00	1.00	1.00	1.00	1.00	1.00	1.00	1.00
Uniform Delay (d), s/veh	14.7	0.0	14.2	16.9	0.0	14.4	15.4	7.7	6.8	19.6	12.6	11.2
Incr Delay (d2), s/veh	0.3	0.0	0.3	0.5	0.0	0.4	3.5	0.6	0.1	47.2	1.6	0.0
Initial Q Delay(d3),s/veh	0.0	0.0	0.0	0.0	0.0	0.0	0.0	0.0	0.0	0.0	0.0	0.0
%ile BackOfQ(50%),veh/ln	1.0	0.0	0.4	1.1	0.0	0.6	2.8	2.1	0.4	0.3	2.3	0.1
LnGrp Delay(d),s/veh	15.0	0.0	14.5	17.4	0.0	14.7	18.9	8.3	6.9	66.8	14.2	11.2
LnGrp LOS	B		B	B		B	B	A	A	E	B	B
Approach Vol, veh/h		141			162			570			243	
Approach Delay, s/veh		14.9			16.3			12.6			16.5	
Approach LOS		B			B			B			B	

Timer	1	2	3	4	5	6	7	8
Assigned Phs	1	2		4	5	6		8
Phs Duration (G+Y+Rc), s	5.3	22.8		11.5	12.2	16.0		11.5
Change Period (Y+Rc), s	5.0	6.0		5.0	5.0	6.0		5.0
Max Green Setting (Gmax), s	15.0	79.0		24.0	30.0	64.0		24.0
Max Q Clear Time (g_c+I1), s	2.2	6.0		4.0	7.1	6.0		6.9
Green Ext Time (p_c), s	0.0	4.1		0.6	0.7	2.9		0.5

Intersection Summary	
HCM 2010 Ctrl Delay	14.3
HCM 2010 LOS	B

Movement	EBL	EBT	EBR	WBL	WBT	WBR	NBL	NBT	NBR	SBL	SBT	SBR
Lane Configurations												
Traffic Volume (veh/h)	60	5	180	90	20	15	135	550	15	10	590	65
Future Volume (veh/h)	60	5	180	90	20	15	135	550	15	10	590	65
Number	7	4	14	3	8	18	5	2	12	1	6	16
Initial Q (Qb), veh	0	0	0	0	0	0	0	0	0	0	0	0
Ped-Bike Adj(A_pbT)	0.98		0.97	0.98		0.97	1.00		1.00	1.00		0.99
Parking Bus, Adj	1.00	1.00	1.00	1.00	1.00	1.00	1.00	1.00	1.00	1.00	1.00	1.00
Adj Sat Flow, veh/h/ln	1900	1863	1863	1863	1863	1900	1863	1863	1863	1863	1863	1863
Adj Flow Rate, veh/h	65	5	19	98	22	2	147	598	0	11	641	30
Adj No. of Lanes	0	1	1	1	1	0	1	1	1	1	1	1
Peak Hour Factor	0.92	0.92	0.92	0.92	0.92	0.92	0.92	0.92	0.92	0.92	0.92	0.92
Percent Heavy Veh, %	2	2	2	2	2	2	2	2	2	2	2	2
Cap, veh/h	364	24	303	329	330	30	377	936	796	364	796	672
Arrive On Green	0.20	0.20	0.20	0.20	0.20	0.20	0.08	0.50	0.00	0.01	0.43	0.43
Sat Flow, veh/h	1208	120	1543	1352	1679	153	1774	1863	1583	1774	1863	1572
Grp Volume(v), veh/h	70	0	19	98	0	24	147	598	0	11	641	30
Grp Sat Flow(s),veh/h/ln	1327	0	1543	1352	0	1831	1774	1863	1583	1774	1863	1572
Q Serve(g_s), s	2.2	0.0	0.5	3.7	0.0	0.6	2.3	12.9	0.0	0.2	16.4	0.6
Cycle Q Clear(g_c), s	2.8	0.0	0.5	6.4	0.0	0.6	2.3	12.9	0.0	0.2	16.4	0.6
Prop In Lane	0.93		1.00	1.00		0.08	1.00		1.00	1.00		1.00
Lane Grp Cap(c), veh/h	388	0	303	329	0	360	377	936	796	364	796	672
V/C Ratio(X)	0.18	0.00	0.06	0.30	0.00	0.07	0.39	0.64	0.00	0.03	0.81	0.04
Avail Cap(c_a), veh/h	746	0	705	681	0	837	715	1737	1476	836	1737	1466
HCM Platoon Ratio	1.00	1.00	1.00	1.00	1.00	1.00	1.00	1.00	1.00	1.00	1.00	1.00
Upstream Filter(I)	1.00	0.00	1.00	1.00	0.00	1.00	1.00	1.00	0.00	1.00	1.00	1.00
Uniform Delay (d), s/veh	18.9	0.0	17.9	21.5	0.0	17.9	10.0	10.0	0.0	9.5	13.7	9.1
Incr Delay (d2), s/veh	0.2	0.0	0.1	0.5	0.0	0.1	0.7	0.7	0.0	0.0	2.0	0.0
Initial Q Delay(d3),s/veh	0.0	0.0	0.0	0.0	0.0	0.0	0.0	0.0	0.0	0.0	0.0	0.0
%ile BackOfQ(50%),veh/ln	0.9	0.0	0.2	1.4	0.0	0.3	1.2	6.7	0.0	0.1	8.8	0.3
LnGrp Delay(d),s/veh	19.1	0.0	18.0	22.0	0.0	18.0	10.7	10.7	0.0	9.5	15.7	9.2
LnGrp LOS	B		B	C		B	B	B		A	B	A
Approach Vol, veh/h		89			122			745			682	
Approach Delay, s/veh		18.9			21.2			10.7			15.3	
Approach LOS		B			C			B			B	

Timer	1	2	3	4	5	6	7	8
Assigned Phs	1	2		4	5	6		8
Phs Duration (G+Y+Rc), s	5.5	33.5		15.8	9.6	29.4		15.8
Change Period (Y+Rc), s	5.0	6.0		5.0	5.0	6.0		5.0
Max Green Setting (Gmax), s	15.0	51.0		25.0	15.0	51.0		25.0
Max Q Clear Time (g_c+I1), s	2.2	14.9		4.8	4.3	18.4		8.4
Green Ext Time (p_c), s	0.0	4.3		0.4	0.3	4.8		0.3

Intersection Summary	
HCM 2010 Ctrl Delay	13.8
HCM 2010 LOS	B

Movement	EBL	EBT	EBR	WBL	WBT	WBR	NBL	NBT	NBR	SBL	SBT	SBR
Lane Configurations												
Traffic Volume (veh/h)	40	5	125	5	5	5	60	635	15	5	795	30
Future Volume (veh/h)	40	5	125	5	5	5	60	635	15	5	795	30
Number	7	4	14	3	8	18	5	2	12	1	6	16
Initial Q (Qb), veh	0	0	0	0	0	0	0	0	0	0	0	0
Ped-Bike Adj(A_pbT)	1.00		0.99	1.00		0.99	1.00		1.00	1.00		0.99
Parking Bus, Adj	1.00	1.00	1.00	1.00	1.00	1.00	1.00	1.00	1.00	1.00	1.00	1.00
Adj Sat Flow, veh/h/ln	1863	1863	1900	1863	1863	1863	1863	1863	1863	1863	1863	1863
Adj Flow Rate, veh/h	43	5	8	5	5	1	65	690	11	5	864	19
Adj No. of Lanes	1	1	0	1	1	1	1	1	1	1	1	1
Peak Hour Factor	0.92	0.92	0.92	0.92	0.92	0.92	0.92	0.92	0.92	0.92	0.92	0.92
Percent Heavy Veh, %	2	2	2	2	2	2	2	2	2	2	2	2
Cap, veh/h	58	73	117	9	162	136	85	1088	924	7	1006	850
Arrive On Green	0.03	0.11	0.11	0.01	0.09	0.09	0.05	0.58	0.58	0.00	0.54	0.54
Sat Flow, veh/h	1774	640	1025	1774	1863	1562	1774	1863	1583	1774	1863	1573
Grp Volume(v), veh/h	43	0	13	5	5	1	65	690	11	5	864	19
Grp Sat Flow(s),veh/h/ln	1774	0	1665	1774	1863	1562	1774	1863	1583	1774	1863	1573
Q Serve(g_s), s	1.6	0.0	0.5	0.2	0.2	0.0	2.5	16.7	0.2	0.2	27.2	0.4
Cycle Q Clear(g_c), s	1.6	0.0	0.5	0.2	0.2	0.0	2.5	16.7	0.2	0.2	27.2	0.4
Prop In Lane	1.00		0.62	1.00		1.00	1.00		1.00	1.00		1.00
Lane Grp Cap(c), veh/h	58	0	190	9	162	136	85	1088	924	7	1006	850
V/C Ratio(X)	0.74	0.00	0.07	0.53	0.03	0.01	0.77	0.63	0.01	0.71	0.86	0.02
Avail Cap(c_a), veh/h	519	0	511	519	572	480	649	1771	1505	649	1771	1495
HCM Platoon Ratio	1.00	1.00	1.00	1.00	1.00	1.00	1.00	1.00	1.00	1.00	1.00	1.00
Upstream Filter(I)	1.00	0.00	1.00	1.00	1.00	1.00	1.00	1.00	1.00	1.00	1.00	1.00
Uniform Delay (d), s/veh	32.8	0.0	27.0	33.9	28.6	28.5	32.2	9.4	6.0	34.0	13.5	7.3
Incr Delay (d2), s/veh	16.9	0.0	0.1	39.6	0.1	0.0	13.5	0.6	0.0	82.5	2.3	0.0
Initial Q Delay(d3),s/veh	0.0	0.0	0.0	0.0	0.0	0.0	0.0	0.0	0.0	0.0	0.0	0.0
%ile BackOfQ(50%),veh/ln	1.1	0.0	0.2	0.2	0.1	0.0	1.5	8.6	0.1	0.3	14.3	0.2
LnGrp Delay(d),s/veh	49.7	0.0	27.2	73.5	28.7	28.5	45.7	10.0	6.0	116.5	15.8	7.3
LnGrp LOS	D		C	E	C	C	D	B	A	F	B	A
Approach Vol, veh/h		56			11			766			888	
Approach Delay, s/veh		44.5			49.0			13.0			16.1	
Approach LOS		D			D			B			B	

Timer	1	2	3	4	5	6	7	8
Assigned Phs	1	2	3	4	5	6	7	8
Phs Duration (G+Y+Rc), s	5.3	44.9	5.4	12.8	8.3	41.9	7.2	11.0
Change Period (Y+Rc), s	5.0	5.0	5.0	5.0	5.0	5.0	5.0	5.0
Max Green Setting (Gmax), s	25.0	65.0	20.0	21.0	25.0	65.0	20.0	21.0
Max Q Clear Time (g_c+I1), s	2.2	18.7	2.2	2.5	4.5	29.2	3.6	2.2
Green Ext Time (p_c), s	0.0	5.5	0.0	0.0	0.1	7.7	0.1	0.0

Intersection Summary	
HCM 2010 Ctrl Delay	15.9
HCM 2010 LOS	B

Movement	EBL	EBT	EBR	WBL	WBT	WBR	NBL	NBT	NBR	SBL	SBT	SBR
Lane Configurations												
Traffic Volume (veh/h)	35	10	480	20	5	0	315	695	45	10	890	10
Future Volume (veh/h)	35	10	480	20	5	0	315	695	45	10	890	10
Number	3	8	18	7	4	14	1	6	16	5	2	12
Initial Q (Qb), veh	0	0	0	0	0	0	0	0	0	0	0	0
Ped-Bike Adj(A_pbT)	0.99		1.00	0.99		1.00	1.00		1.00	1.00		1.00
Parking Bus, Adj	1.00	1.00	1.00	1.00	1.00	1.00	1.00	1.00	1.00	1.00	1.00	1.00
Adj Sat Flow, veh/h/ln	1900	1863	1863	1900	1863	1900	1863	1863	1900	1863	1863	1863
Adj Flow Rate, veh/h	38	11	0	22	5	0	342	755	48	11	967	3
Adj No. of Lanes	0	1	1	0	1	0	1	2	0	1	2	1
Peak Hour Factor	0.92	0.92	0.92	0.92	0.92	0.92	0.92	0.92	0.92	0.92	0.92	0.92
Percent Heavy Veh, %	2	2	2	2	2	2	2	2	2	2	2	2
Cap, veh/h	183	30	113	188	30	0	406	2284	145	15	1612	721
Arrive On Green	0.09	0.07	0.00	0.09	0.07	0.00	0.23	0.68	0.68	0.01	0.46	0.46
Sat Flow, veh/h	1111	421	1583	1151	418	0	1774	3380	215	1774	3539	1583
Grp Volume(v), veh/h	49	0	0	27	0	0	342	395	408	11	967	3
Grp Sat Flow(s),veh/h/ln	1532	0	1583	1569	0	0	1774	1770	1825	1774	1770	1583
Q Serve(g_s), s	0.9	0.0	0.0	0.0	0.0	0.0	11.3	5.7	5.7	0.4	12.5	0.1
Cycle Q Clear(g_c), s	1.7	0.0	0.0	0.8	0.0	0.0	11.3	5.7	5.7	0.4	12.5	0.1
Prop In Lane	0.78		1.00	0.81		0.00	1.00		0.12	1.00		1.00
Lane Grp Cap(c), veh/h	238	0	113	244	0	0	406	1196	1233	15	1612	721
V/C Ratio(X)	0.21	0.00	0.00	0.11	0.00	0.00	0.84	0.33	0.33	0.74	0.60	0.00
Avail Cap(c_a), veh/h	616	0	517	735	0	0	2055	1993	2055	2055	3985	1783
HCM Platoon Ratio	1.00	1.00	1.00	1.00	1.00	1.00	1.00	1.00	1.00	1.00	1.00	1.00
Upstream Filter(I)	1.00	0.00	0.00	1.00	0.00	0.00	1.00	1.00	1.00	1.00	1.00	1.00
Uniform Delay (d), s/veh	26.8	0.0	0.0	26.4	0.0	0.0	22.6	4.1	4.1	30.3	12.5	9.1
Incr Delay (d2), s/veh	0.4	0.0	0.0	0.2	0.0	0.0	1.9	0.3	0.3	23.3	0.8	0.0
Initial Q Delay(d3),s/veh	0.0	0.0	0.0	0.0	0.0	0.0	0.0	0.0	0.0	0.0	0.0	0.0
%ile BackOfQ(50%),veh/ln	0.8	0.0	0.0	0.4	0.0	0.0	5.7	2.9	2.9	0.3	6.2	0.0
LnGrp Delay(d),s/veh	27.2	0.0	0.0	26.6	0.0	0.0	24.4	4.5	4.5	53.6	13.3	9.1
LnGrp LOS	C			C			C	A	A	D	B	A
Approach Vol, veh/h		49			27			1145			981	
Approach Delay, s/veh		27.2			26.6			10.4			13.7	
Approach LOS		C			C			B			B	

Timer	1	2	3	4	5	6	7	8
Assigned Phs	1	2		4	5	6		8
Phs Duration (G+Y+Rc), s	18.0	33.9		9.4	4.5	47.4		9.4
Change Period (Y+Rc), s	4.0	6.0		5.0	4.0	6.0		5.0
Max Green Setting (Gmax), s	71.0	69.0		25.0	71.0	69.0		20.0
Max Q Clear Time (g_c+I1), s	13.3	14.5		2.8	2.4	7.7		3.7
Green Ext Time (p_c), s	0.8	13.4		0.0	0.0	9.3		0.1

Intersection Summary	
HCM 2010 Ctrl Delay	12.5
HCM 2010 LOS	B

Movement	EBL	EBT	EBR	WBL	WBT	WBR	NBL	NBT	NBR	SBL	SBT	SBR
Lane Configurations												
Traffic Volume (veh/h)	30	0	70	10	5	10	135	1105	20	15	1370	65
Future Volume (veh/h)	30	0	70	10	5	10	135	1105	20	15	1370	65
Number	3	8	18	7	4	14	1	6	16	5	2	12
Initial Q (Qb), veh	0	0	0	0	0	0	0	0	0	0	0	0
Ped-Bike Adj(A_pbT)	1.00		1.00	1.00		1.00	1.00		1.00	1.00		1.00
Parking Bus, Adj	1.00	1.00	1.00	1.00	1.00	1.00	1.00	1.00	1.00	1.00	1.00	1.00
Adj Sat Flow, veh/h/ln	1900	1863	1863	1900	1863	1900	1863	1863	1900	1863	1863	1863
Adj Flow Rate, veh/h	33	0	1	11	5	1	147	1201	21	16	1489	44
Adj No. of Lanes	0	1	1	0	1	0	1	2	0	1	2	1
Peak Hour Factor	0.92	0.92	0.92	0.92	0.92	0.92	0.92	0.92	0.92	0.92	0.92	0.92
Percent Heavy Veh, %	2	2	2	2	2	2	2	2	2	2	2	2
Cap, veh/h	169	0	70	112	19	3	185	2671	47	20	2328	1042
Arrive On Green	0.06	0.00	0.04	0.06	0.04	0.04	0.10	0.75	0.75	0.01	0.66	0.66
Sat Flow, veh/h	1555	0	1583	686	435	70	1774	3559	62	1774	3539	1583
Grp Volume(v), veh/h	33	0	1	17	0	0	147	597	625	16	1489	44
Grp Sat Flow(s),veh/h/ln	1555	0	1583	1191	0	0	1774	1770	1852	1774	1770	1583
Q Serve(g_s), s	0.0	0.0	0.0	0.4	0.0	0.0	5.9	9.2	9.2	0.7	18.0	0.7
Cycle Q Clear(g_c), s	1.3	0.0	0.0	1.7	0.0	0.0	5.9	9.2	9.2	0.7	18.0	0.7
Prop In Lane	1.00		1.00	0.65		0.06	1.00		0.03	1.00		1.00
Lane Grp Cap(c), veh/h	190	0	70	151	0	0	185	1328	1390	20	2328	1042
V/C Ratio(X)	0.17	0.00	0.01	0.11	0.00	0.00	0.80	0.45	0.45	0.79	0.64	0.04
Avail Cap(c_a), veh/h	575	0	504	570	0	0	515	2105	2203	270	3721	1665
HCM Platoon Ratio	1.00	1.00	1.00	1.00	1.00	1.00	1.00	1.00	1.00	1.00	1.00	1.00
Upstream Filter(I)	1.00	0.00	1.00	1.00	0.00	0.00	1.00	1.00	1.00	1.00	1.00	1.00
Uniform Delay (d), s/veh	33.1	0.0	33.0	33.5	0.0	0.0	31.6	3.4	3.4	35.6	7.3	4.4
Incr Delay (d2), s/veh	0.2	0.0	0.0	0.1	0.0	0.0	2.9	0.5	0.5	21.8	0.6	0.0
Initial Q Delay(d3),s/veh	0.0	0.0	0.0	0.0	0.0	0.0	0.0	0.0	0.0	0.0	0.0	0.0
%ile BackOfQ(50%),veh/ln	0.6	0.0	0.0	0.3	0.0	0.0	3.0	4.5	4.7	0.4	8.9	0.3
LnGrp Delay(d),s/veh	33.3	0.0	33.1	33.6	0.0	0.0	34.6	3.9	3.9	57.5	7.9	4.4
LnGrp LOS	C		C	C			C	A	A	E	A	A
Approach Vol, veh/h		34			17			1369			1549	
Approach Delay, s/veh		33.3			33.6			7.2			8.3	
Approach LOS		C			C			A			A	

Timer	1	2	3	4	5	6	7	8
Assigned Phs	1	2		4	5	6		8
Phs Duration (G+Y+Rc), s	11.5	52.5		8.2	4.8	59.3		8.2
Change Period (Y+Rc), s	4.0	5.0		5.0	4.0	5.0		5.0
Max Green Setting (Gmax), s	21.0	76.0		23.0	11.0	86.0		23.0
Max Q Clear Time (g_c+I1), s	7.9	20.0		3.7	2.7	11.2		3.3
Green Ext Time (p_c), s	0.1	27.6		0.0	0.0	18.9		0.0

Intersection Summary	
HCM 2010 Ctrl Delay	8.2
HCM 2010 LOS	A

Movement	EBL	EBT	EBR	WBL	WBT	WBR	NBL	NBT	NBR	SBL	SBT	SBR
Lane Configurations												
Traffic Volume (veh/h)	55	5	35	40	15	45	110	1270	60	25	1320	45
Future Volume (veh/h)	55	5	35	40	15	45	110	1270	60	25	1320	45
Number	3	8	18	7	4	14	1	6	16	5	2	12
Initial Q (Qb), veh	0	0	0	0	0	0	0	0	0	0	0	0
Ped-Bike Adj(A_pbT)	1.00		1.00	1.00		1.00	1.00		1.00	1.00		1.00
Parking Bus, Adj	1.00	1.00	1.00	1.00	1.00	1.00	1.00	1.00	1.00	1.00	1.00	1.00
Adj Sat Flow, veh/h/ln	1900	1863	1863	1863	1863	1900	1863	1863	1863	1863	1863	1863
Adj Flow Rate, veh/h	60	5	1	43	16	1	120	1380	50	27	1435	36
Adj No. of Lanes	0	1	1	1	1	0	1	2	1	1	2	1
Peak Hour Factor	0.92	0.92	0.92	0.92	0.92	0.92	0.92	0.92	0.92	0.92	0.92	0.92
Percent Heavy Veh, %	2	2	2	2	2	2	2	2	2	2	2	2
Cap, veh/h	160	12	153	111	168	10	142	2776	1242	39	2571	1150
Arrive On Green	0.10	0.10	0.10	0.10	0.10	0.10	0.08	0.78	0.78	0.02	0.73	0.73
Sat Flow, veh/h	1193	120	1578	1401	1735	108	1774	3539	1583	1774	3539	1583
Grp Volume(v), veh/h	65	0	1	43	0	17	120	1380	50	27	1435	36
Grp Sat Flow(s),veh/h/ln	1313	0	1578	1401	0	1843	1774	1770	1583	1774	1770	1583
Q Serve(g_s), s	6.6	0.0	0.1	4.7	0.0	1.3	10.3	21.4	1.1	2.3	28.9	1.0
Cycle Q Clear(g_c), s	7.9	0.0	0.1	12.5	0.0	1.3	10.3	21.4	1.1	2.3	28.9	1.0
Prop In Lane	0.92		1.00	1.00		0.06	1.00		1.00	1.00		1.00
Lane Grp Cap(c), veh/h	172	0	153	111	0	178	142	2776	1242	39	2571	1150
V/C Ratio(X)	0.38	0.00	0.01	0.39	0.00	0.10	0.85	0.50	0.04	0.69	0.56	0.03
Avail Cap(c_a), veh/h	254	0	244	192	0	285	240	2776	1242	240	2571	1150
HCM Platoon Ratio	1.00	1.00	1.00	1.00	1.00	1.00	1.00	1.00	1.00	1.00	1.00	1.00
Upstream Filter(I)	1.00	0.00	1.00	1.00	0.00	1.00	0.73	0.73	0.73	1.00	1.00	1.00
Uniform Delay (d), s/veh	67.3	0.0	63.3	72.8	0.0	63.8	70.4	5.9	3.7	75.2	9.7	5.9
Incr Delay (d2), s/veh	1.4	0.0	0.0	2.2	0.0	0.2	3.9	0.5	0.0	7.6	0.9	0.1
Initial Q Delay(d3),s/veh	0.0	0.0	0.0	0.0	0.0	0.0	0.0	0.0	0.0	0.0	0.0	0.0
%ile BackOfQ(50%),veh/ln	2.7	0.0	0.0	1.9	0.0	0.7	5.2	10.5	0.5	1.2	14.3	0.4
LnGrp Delay(d),s/veh	68.7	0.0	63.3	75.0	0.0	64.1	74.2	6.4	3.8	82.9	10.6	6.0
LnGrp LOS	E		E	E		E	E	A	A	F	B	A
Approach Vol, veh/h		66			60			1550			1498	
Approach Delay, s/veh		68.6			71.9			11.5			11.8	
Approach LOS		E			E			B			B	

Timer	1	2	3	4	5	6	7	8
Assigned Phs	1	2		4	5	6		8
Phs Duration (G+Y+Rc), s	16.4	118.6		20.0	7.4	127.6		20.0
Change Period (Y+Rc), s	4.0	6.0		5.0	4.0	6.0		5.0
Max Green Setting (Gmax), s	21.0	95.0		24.0	21.0	95.0		24.0
Max Q Clear Time (g_c+I1), s	12.3	30.9		14.5	4.3	23.4		9.9
Green Ext Time (p_c), s	0.1	27.3		0.1	0.0	26.8		0.1

Intersection Summary	
HCM 2010 Ctrl Delay	14.0
HCM 2010 LOS	B

Movement	EBL	EBT	EBR	WBL	WBT	WBR	NBL	NBT	NBR	SBL	SBT	SBR
Lane Configurations												
Traffic Volume (veh/h)	140	10	235	10	10	10	460	1345	15	80	1280	110
Future Volume (veh/h)	140	10	235	10	10	10	460	1345	15	80	1280	110
Number	3	8	18	7	4	14	1	6	16	5	2	12
Initial Q (Qb), veh	0	0	0	0	0	0	0	0	0	0	0	0
Ped-Bike Adj(A_pbT)	1.00		0.97	1.00		0.97	1.00		1.00	1.00		1.00
Parking Bus, Adj	1.00	1.00	1.00	1.00	1.00	1.00	1.00	1.00	1.00	1.00	1.00	1.00
Adj Sat Flow, veh/h/ln	1863	1863	1863	1900	1863	1900	1863	1863	1900	1863	1863	1863
Adj Flow Rate, veh/h	160	0	67	11	11	3	500	1462	16	87	1391	90
Adj No. of Lanes	2	0	2	0	1	0	2	2	0	1	2	1
Peak Hour Factor	0.92	0.92	0.92	0.92	0.92	0.92	0.92	0.92	0.92	0.92	0.92	0.92
Percent Heavy Veh, %	2	2	2	2	2	2	2	2	2	2	2	2
Cap, veh/h	324	0	839	59	59	16	636	2203	24	146	1811	938
Arrive On Green	0.09	0.00	0.08	0.08	0.08	0.05	0.18	0.61	0.60	0.08	0.51	0.51
Sat Flow, veh/h	3548	0	3071	783	783	214	3442	3586	39	1774	3539	1578
Grp Volume(v), veh/h	160	0	67	25	0	0	500	721	757	87	1391	90
Grp Sat Flow(s),veh/h/ln	1774	0	1535	1779	0	0	1721	1770	1856	1774	1770	1578
Q Serve(g_s), s	5.0	0.0	1.9	1.5	0.0	0.0	16.2	31.0	31.0	5.5	36.9	2.9
Cycle Q Clear(g_c), s	5.0	0.0	1.9	1.5	0.0	0.0	16.2	31.0	31.0	5.5	36.9	2.9
Prop In Lane	1.00		1.00	0.44		0.12	1.00		0.02	1.00		1.00
Lane Grp Cap(c), veh/h	324	0	839	134	0	0	636	1087	1140	146	1811	938
V/C Ratio(X)	0.49	0.00	0.08	0.19	0.00	0.00	0.79	0.66	0.66	0.60	0.77	0.10
Avail Cap(c_a), veh/h	1033	0	1453	472	0	0	1709	2939	3082	228	4574	2170
HCM Platoon Ratio	1.00	1.00	1.00	1.00	1.00	1.00	1.00	1.00	1.00	1.00	1.00	1.00
Upstream Filter(I)	1.00	0.00	1.00	1.00	0.00	0.00	1.00	1.00	1.00	1.00	1.00	1.00
Uniform Delay (d), s/veh	50.5	0.0	32.0	50.8	0.0	0.0	45.4	14.7	14.7	51.8	23.0	10.2
Incr Delay (d2), s/veh	0.4	0.0	0.0	0.7	0.0	0.0	0.8	1.0	1.0	1.5	1.0	0.1
Initial Q Delay(d3),s/veh	0.0	0.0	0.0	0.0	0.0	0.0	0.0	0.0	0.0	0.0	0.0	0.0
%ile BackOfQ(50%),veh/ln	2.5	0.0	0.8	0.8	0.0	0.0	7.8	15.3	16.1	2.8	18.2	1.5
LnGrp Delay(d),s/veh	51.0	0.0	32.1	51.5	0.0	0.0	46.2	15.7	15.6	53.2	24.0	10.3
LnGrp LOS	D		C	D			D	B	B	D	C	B
Approach Vol, veh/h		227			25			1978			1568	
Approach Delay, s/veh		45.4			51.5			23.4			24.8	
Approach LOS		D			D			C			C	

Timer	1	2	3	4	5	6	7	8
Assigned Phs	1	2		4	5	6		8
Phs Duration (G+Y+Rc), s	25.6	63.8		12.8	13.6	75.8		14.7
Change Period (Y+Rc), s	6.0	6.0		7.0	6.0	6.0		7.0
Max Green Setting (Gmax), s	56.0	149.0		28.0	13.0	192.0		31.0
Max Q Clear Time (g_c+I1), s	18.2	38.9		3.5	7.5	33.0		7.0
Green Ext Time (p_c), s	1.4	18.8		0.0	0.1	17.4		0.6

Intersection Summary	
HCM 2010 Ctrl Delay	25.5
HCM 2010 LOS	C

Notes

Movement	EBL	EBT	EBR	WBL	WBT	WBR	NBL	NBT	NBR	SBL	SBT	SBR
Lane Configurations												
Traffic Volume (veh/h)	5	5	5	60	0	45	5	1825	90	30	1475	5
Future Volume (veh/h)	5	5	5	60	0	45	5	1825	90	30	1475	5
Number	3	8	18	7	4	14	1	6	16	5	2	12
Initial Q (Qb), veh	0	0	0	0	0	0	0	0	0	0	0	0
Ped-Bike Adj(A_pbT)	0.98		0.97	0.98		0.97	1.00		1.00	1.00		1.00
Parking Bus, Adj	1.00	1.00	1.00	1.00	1.00	1.00	1.00	1.00	1.00	1.00	1.00	1.00
Adj Sat Flow, veh/h/ln	1900	1863	1900	1863	1863	1900	1863	1863	1900	1863	1863	1900
Adj Flow Rate, veh/h	5	5	1	65	0	1	5	1984	96	33	1603	5
Adj No. of Lanes	0	1	0	1	1	0	1	2	0	1	2	0
Peak Hour Factor	0.92	0.92	0.92	0.92	0.92	0.92	0.92	0.92	0.92	0.92	0.92	0.92
Percent Heavy Veh, %	2	2	2	2	2	2	2	2	2	2	2	2
Cap, veh/h	90	80	13	176	0	138	11	2713	130	63	2962	9
Arrive On Green	0.09	0.09	0.08	0.09	0.00	0.08	0.01	0.79	0.78	0.04	0.82	0.81
Sat Flow, veh/h	584	895	148	1372	0	1543	1774	3438	165	1774	3619	11
Grp Volume(v), veh/h	11	0	0	65	0	1	5	1013	1067	33	784	824
Grp Sat Flow(s),veh/h/ln	1627	0	0	1372	0	1543	1774	1770	1833	1774	1770	1861
Q Serve(g_s), s	0.0	0.0	0.0	5.4	0.0	0.1	0.4	39.6	41.2	2.6	20.2	20.2
Cycle Q Clear(g_c), s	0.8	0.0	0.0	6.1	0.0	0.1	0.4	39.6	41.2	2.6	20.2	20.2
Prop In Lane	0.45		0.09	1.00		1.00	1.00		0.09	1.00		0.01
Lane Grp Cap(c), veh/h	183	0	0	176	0	138	11	1396	1447	63	1448	1523
V/C Ratio(X)	0.06	0.00	0.00	0.37	0.00	0.01	0.45	0.73	0.74	0.52	0.54	0.54
Avail Cap(c_a), veh/h	312	0	0	289	0	265	101	1396	1447	101	1448	1523
HCM Platoon Ratio	1.00	1.00	1.00	1.00	1.00	1.00	1.00	1.00	1.00	1.00	1.00	1.00
Upstream Filter(I)	1.00	0.00	0.00	1.00	0.00	1.00	0.59	0.59	0.59	1.00	1.00	1.00
Uniform Delay (d), s/veh	58.4	0.0	0.0	60.7	0.0	58.5	69.3	7.3	7.5	66.3	4.1	4.1
Incr Delay (d2), s/veh	0.1	0.0	0.0	1.3	0.0	0.0	6.0	2.0	2.0	2.5	1.5	1.4
Initial Q Delay(d3),s/veh	0.0	0.0	0.0	0.0	0.0	0.0	0.0	0.0	0.0	0.0	0.0	0.0
%ile BackOfQ(50%),veh/ln	0.4	0.0	0.0	2.5	0.0	0.0	0.2	19.6	21.3	1.3	10.2	10.7
LnGrp Delay(d),s/veh	58.6	0.0	0.0	62.0	0.0	58.6	75.4	9.3	9.5	68.8	5.6	5.5
LnGrp LOS	E			E		E	E	A	A	E	A	A
Approach Vol, veh/h		11			66			2085			1641	
Approach Delay, s/veh		58.6			62.0			9.6			6.8	
Approach LOS		E			E			A			A	

Timer	1	2	3	4	5	6	7	8
Assigned Phs	1	2		4	5	6		8
Phs Duration (G+Y+Rc), s	4.9	118.6		16.5	9.0	114.5		16.5
Change Period (Y+Rc), s	4.0	5.0		5.0	4.0	5.0		5.0
Max Green Setting (Gmax), s	8.0	95.0		23.0	8.0	95.0		23.0
Max Q Clear Time (g_c+I1), s	2.4	22.2		8.1	4.6	43.2		2.8
Green Ext Time (p_c), s	0.0	32.7		0.1	0.0	41.1		0.0

Intersection Summary	
HCM 2010 Ctrl Delay	9.4
HCM 2010 LOS	A

Movement	EBL	EBT	EBR	WBL	WBT	WBR	NBL	NBT	NBR	SBL	SBT	SBR
Lane Configurations												
Traffic Volume (veh/h)	90	5	5	105	15	15	5	1805	20	10	1315	185
Future Volume (veh/h)	90	5	5	105	15	15	5	1805	20	10	1315	185
Number	3	8	18	7	4	14	1	6	16	5	2	12
Initial Q (Qb), veh	0	0	0	0	0	0	0	0	0	0	0	0
Ped-Bike Adj(A_pbT)	1.00		1.00	1.00		1.00	1.00		1.00	1.00		1.00
Parking Bus, Adj	1.00	1.00	1.00	1.00	1.00	1.00	1.00	1.00	1.00	1.00	1.00	1.00
Adj Sat Flow, veh/h/ln	1900	1863	1900	1900	1863	1900	1863	1863	1900	1863	1863	1863
Adj Flow Rate, veh/h	98	5	3	114	16	12	5	1962	22	11	1429	144
Adj No. of Lanes	0	1	0	0	1	0	1	2	0	1	2	1
Peak Hour Factor	0.92	0.92	0.92	0.92	0.92	0.92	0.92	0.92	0.92	0.92	0.92	0.92
Percent Heavy Veh, %	2	2	2	2	2	2	2	2	2	2	2	2
Cap, veh/h	210	8	5	198	20	15	7	2805	31	14	2782	1243
Arrive On Green	0.11	0.11	0.10	0.11	0.11	0.10	0.00	0.78	0.77	0.01	0.79	0.79
Sat Flow, veh/h	1387	71	42	1312	184	138	1774	3585	40	1774	3539	1581
Grp Volume(v), veh/h	106	0	0	142	0	0	5	967	1017	11	1429	144
Grp Sat Flow(s),veh/h/ln	1500	0	0	1634	0	0	1774	1770	1856	1774	1770	1581
Q Serve(g_s), s	0.0	0.0	0.0	1.8	0.0	0.0	0.3	31.4	31.7	0.7	17.4	2.6
Cycle Q Clear(g_c), s	7.9	0.0	0.0	9.8	0.0	0.0	0.3	31.4	31.7	0.7	17.4	2.6
Prop In Lane	0.92		0.03	0.80		0.08	1.00		0.02	1.00		1.00
Lane Grp Cap(c), veh/h	223	0	0	234	0	0	7	1384	1452	14	2782	1243
V/C Ratio(X)	0.48	0.00	0.00	0.61	0.00	0.00	0.73	0.70	0.70	0.81	0.51	0.12
Avail Cap(c_a), veh/h	430	0	0	450	0	0	118	1384	1452	118	2782	1243
HCM Platoon Ratio	1.00	1.00	1.00	1.00	1.00	1.00	1.00	1.00	1.00	1.00	1.00	1.00
Upstream Filter(I)	1.00	0.00	0.00	1.00	0.00	0.00	0.60	0.60	0.60	0.83	0.83	0.83
Uniform Delay (d), s/veh	51.1	0.0	0.0	51.8	0.0	0.0	59.7	6.3	6.3	59.5	4.6	3.0
Incr Delay (d2), s/veh	1.6	0.0	0.0	2.5	0.0	0.0	28.3	1.8	1.7	28.1	0.6	0.2
Initial Q Delay(d3),s/veh	0.0	0.0	0.0	0.0	0.0	0.0	0.0	0.0	0.0	0.0	0.0	0.0
%ile BackOfQ(50%),veh/ln	3.5	0.0	0.0	4.7	0.0	0.0	0.2	15.7	16.5	0.5	8.6	1.2
LnGrp Delay(d),s/veh	52.6	0.0	0.0	54.3	0.0	0.0	88.0	8.0	8.0	87.5	5.2	3.2
LnGrp LOS	D			D			F	A	A	F	A	A
Approach Vol, veh/h		106			142			1989			1584	
Approach Delay, s/veh		52.6			54.3			8.2			5.6	
Approach LOS		D			D			A			A	

Timer	1	2	3	4	5	6	7	8
Assigned Phs	1	2		4	5	6		8
Phs Duration (G+Y+Rc), s	4.5	98.3		17.2	4.9	97.9		17.2
Change Period (Y+Rc), s	4.0	5.0		5.0	4.0	5.0		5.0
Max Green Setting (Gmax), s	8.0	68.0		30.0	8.0	68.0		30.0
Max Q Clear Time (g_c+I1), s	2.3	19.4		11.8	2.7	33.7		9.9
Green Ext Time (p_c), s	0.0	32.9		0.5	0.0	31.0		0.3

Intersection Summary	
HCM 2010 Ctrl Delay	10.1
HCM 2010 LOS	B

Movement	EBL	EBT	EBR	WBL	WBT	WBR	NBL	NBT	NBR	SBL	SBT	SBR
Lane Configurations												
Traffic Volume (veh/h)	145	30	20	145	25	35	25	1625	75	10	1355	70
Future Volume (veh/h)	145	30	20	145	25	35	25	1625	75	10	1355	70
Number	3	8	18	7	4	14	1	6	16	5	2	12
Initial Q (Qb), veh	0	0	0	0	0	0	0	0	0	0	0	0
Ped-Bike Adj(A_pbT)	0.99		0.98	0.99		0.98	1.00		1.00	1.00		1.00
Parking Bus, Adj	1.00	1.00	1.00	1.00	1.00	1.00	1.00	1.00	1.00	1.00	1.00	1.00
Adj Sat Flow, veh/h/ln	1900	1863	1863	1863	1863	1900	1863	1863	1900	1863	1863	1900
Adj Flow Rate, veh/h	158	33	2	158	27	5	27	1766	80	11	1473	74
Adj No. of Lanes	0	1	1	1	1	0	1	2	0	1	2	0
Peak Hour Factor	0.92	0.92	0.92	0.92	0.92	0.92	0.92	0.92	0.92	0.92	0.92	0.92
Percent Heavy Veh, %	2	2	2	2	2	2	2	2	2	2	2	2
Cap, veh/h	229	38	265	307	259	48	34	2542	114	13	2488	125
Arrive On Green	0.17	0.17	0.17	0.17	0.17	0.16	0.04	1.00	1.00	0.01	0.73	0.72
Sat Flow, veh/h	1070	224	1558	1358	1525	282	1774	3450	155	1774	3430	172
Grp Volume(v), veh/h	191	0	2	158	0	32	27	901	945	11	758	789
Grp Sat Flow(s),veh/h/ln	1294	0	1558	1358	0	1807	1774	1770	1835	1774	1770	1832
Q Serve(g_s), s	18.4	0.0	0.1	0.0	0.0	2.1	2.1	0.0	0.0	0.9	28.8	29.1
Cycle Q Clear(g_c), s	20.5	0.0	0.1	13.4	0.0	2.1	2.1	0.0	0.0	0.9	28.8	29.1
Prop In Lane	0.83		1.00	1.00		0.16	1.00		0.08	1.00		0.09
Lane Grp Cap(c), veh/h	267	0	265	307	0	307	34	1304	1353	13	1283	1329
V/C Ratio(X)	0.72	0.00	0.01	0.51	0.00	0.10	0.79	0.69	0.70	0.83	0.59	0.59
Avail Cap(c_a), veh/h	310	0	312	348	0	361	139	1304	1353	139	1283	1329
HCM Platoon Ratio	1.00	1.00	1.00	1.00	1.00	1.00	2.00	2.00	2.00	1.00	1.00	1.00
Upstream Filter(I)	1.00	0.00	1.00	1.00	0.00	1.00	0.45	0.45	0.45	0.83	0.83	0.83
Uniform Delay (d), s/veh	57.8	0.0	48.3	53.8	0.0	49.2	67.0	0.0	0.0	69.4	9.2	9.3
Incr Delay (d2), s/veh	6.5	0.0	0.0	1.3	0.0	0.1	6.9	1.4	1.4	31.6	1.7	1.6
Initial Q Delay(d3),s/veh	0.0	0.0	0.0	0.0	0.0	0.0	0.0	0.0	0.0	0.0	0.0	0.0
%ile BackOfQ(50%),veh/ln	7.7	0.0	0.1	5.8	0.0	1.1	1.1	0.5	0.5	0.5	14.5	15.1
LnGrp Delay(d),s/veh	64.2	0.0	48.3	55.1	0.0	49.3	74.0	1.4	1.4	101.0	10.9	10.9
LnGrp LOS	E		D	E		D	E	A	A	F	B	B
Approach Vol, veh/h		193			190			1873			1558	
Approach Delay, s/veh		64.1			54.2			2.4			11.6	
Approach LOS		E			D			A			B	

Timer	1	2	3	4	5	6	7	8
Assigned Phs	1	2		4	5	6		8
Phs Duration (G+Y+Rc), s	6.7	105.5		27.8	5.0	107.2		27.8
Change Period (Y+Rc), s	4.0	5.0		5.0	4.0	5.0		5.0
Max Green Setting (Gmax), s	11.0	88.0		27.0	11.0	88.0		27.0
Max Q Clear Time (g_c+I1), s	4.1	31.1		15.4	2.9	2.0		22.5
Green Ext Time (p_c), s	0.0	27.6		0.5	0.0	47.4		0.3

Intersection Summary	
HCM 2010 Ctrl Delay	11.9
HCM 2010 LOS	B

Movement	EBL	EBT	EBR	WBL	WBT	WBR	NBL	NBT	NBR	SBL	SBT	SBR
Lane Configurations												
Traffic Volume (veh/h)	15	110	35	95	75	715	25	925	120	515	935	20
Future Volume (veh/h)	15	110	35	95	75	715	25	925	120	515	935	20
Number	7	4	14	3	8	18	1	6	16	5	2	12
Initial Q (Qb), veh	0	0	0	0	0	0	0	0	0	0	0	0
Ped-Bike Adj(A_pbT)	0.99		0.99	0.99		0.99	1.00		1.00	1.00		1.00
Parking Bus, Adj	1.00	1.00	1.00	1.00	1.00	1.00	1.00	1.00	1.00	1.00	1.00	1.00
Adj Sat Flow, veh/h/ln	1900	1863	1863	1863	1863	1863	1863	1863	1863	1863	1863	1900
Adj Flow Rate, veh/h	16	120	4	103	82	457	27	1005	55	560	1016	21
Adj No. of Lanes	0	1	1	1	1	1	1	2	1	2	2	0
Peak Hour Factor	0.92	0.92	0.92	0.92	0.92	0.92	0.92	0.92	0.92	0.92	0.92	0.92
Percent Heavy Veh, %	2	2	2	2	2	2	2	2	2	2	2	2
Cap, veh/h	52	345	333	356	571	481	34	1520	677	614	2087	43
Arrive On Green	0.21	0.21	0.21	0.07	0.31	0.31	0.02	0.43	0.43	0.36	1.00	1.00
Sat Flow, veh/h	111	1622	1563	1774	1863	1569	1774	3539	1576	3442	3546	73
Grp Volume(v), veh/h	136	0	4	103	82	457	27	1005	55	560	507	530
Grp Sat Flow(s),veh/h/ln	1733	0	1563	1774	1863	1569	1774	1770	1576	1721	1770	1850
Q Serve(g_s), s	0.0	0.0	0.3	6.1	4.5	39.9	2.1	31.7	2.9	21.7	0.0	0.0
Cycle Q Clear(g_c), s	8.7	0.0	0.3	6.1	4.5	39.9	2.1	31.7	2.9	21.7	0.0	0.0
Prop In Lane	0.12		1.00	1.00		1.00	1.00		1.00	1.00		0.04
Lane Grp Cap(c), veh/h	398	0	333	356	571	481	34	1520	677	614	1041	1089
V/C Ratio(X)	0.34	0.00	0.01	0.29	0.14	0.95	0.79	0.66	0.08	0.91	0.49	0.49
Avail Cap(c_a), veh/h	398	0	333	443	572	482	177	1520	677	836	1041	1089
HCM Platoon Ratio	1.00	1.00	1.00	1.00	1.00	1.00	1.00	1.00	1.00	2.00	2.00	2.00
Upstream Filter(I)	1.00	0.00	1.00	1.00	1.00	1.00	0.79	0.79	0.79	0.70	0.70	0.70
Uniform Delay (d), s/veh	46.8	0.0	43.5	37.7	35.2	47.5	68.4	31.8	23.6	44.0	0.0	0.0
Incr Delay (d2), s/veh	0.5	0.0	0.0	0.4	0.1	28.7	11.4	1.8	0.2	7.1	1.1	1.1
Initial Q Delay(d3),s/veh	0.0	0.0	0.0	0.0	0.0	0.0	0.0	0.0	0.0	0.0	0.0	0.0
%ile BackOfQ(50%),veh/ln	4.5	0.0	0.1	3.0	2.3	21.1	1.2	15.9	1.3	10.9	0.3	0.3
LnGrp Delay(d),s/veh	47.3	0.0	43.5	38.1	35.3	76.2	79.8	33.6	23.8	51.1	1.1	1.1
LnGrp LOS	D		D	D	D	E	E	C	C	D	A	A
Approach Vol, veh/h		140			642			1087			1597	
Approach Delay, s/veh		47.2			64.8			34.3			18.6	
Approach LOS		D			E			C			B	

Timer	1	2	3	4	5	6	7	8
Assigned Phs	1	2	3	4	5	6		8
Phs Duration (G+Y+Rc), s	6.7	86.4	13.1	33.8	29.0	64.1		46.9
Change Period (Y+Rc), s	4.0	5.0	5.0	5.0	4.0	5.0		5.0
Max Green Setting (Gmax), s	14.0	70.0	15.0	22.0	34.0	50.0		42.0
Max Q Clear Time (g_c+I1), s	4.1	2.0	8.1	10.7	23.7	33.7		41.9
Green Ext Time (p_c), s	0.0	13.9	0.2	0.4	1.2	8.8		0.0

Intersection Summary	
HCM 2010 Ctrl Delay	33.3
HCM 2010 LOS	C

Notes

APPENDIX C

LEVEL OF SERVICE CALCULATIONS

- Base Year 2027 PM Peak

Movement	EBL	EBT	EBR	WBL	WBT	WBR	NBL	NBT	NBR	SBL	SBT	SBR
Lane Configurations												
Traffic Volume (veh/h)	55	25	370	60	25	5	380	275	65	10	375	75
Future Volume (veh/h)	55	25	370	60	25	5	380	275	65	10	375	75
Number	7	4	14	3	8	18	5	2	12	1	6	16
Initial Q (Qb), veh	0	0	0	0	0	0	0	0	0	0	0	0
Ped-Bike Adj(A_pbT)	1.00		1.00	1.00		1.00	1.00		1.00	1.00		1.00
Parking Bus, Adj	1.00	1.00	1.00	1.00	1.00	1.00	1.00	1.00	1.00	1.00	1.00	1.00
Adj Sat Flow, veh/h/ln	1900	1863	1863	1863	1863	1900	1863	1863	1863	1863	1863	1863
Adj Flow Rate, veh/h	60	27	20	65	27	1	413	299	46	11	408	24
Adj No. of Lanes	0	1	1	1	1	0	1	1	1	1	1	1
Peak Hour Factor	0.92	0.92	0.92	0.92	0.92	0.92	0.92	0.92	0.92	0.92	0.92	0.92
Percent Heavy Veh, %	2	2	2	2	2	2	2	2	2	2	2	2
Cap, veh/h	207	65	172	202	194	7	489	1112	945	15	614	522
Arrive On Green	0.11	0.11	0.11	0.11	0.11	0.11	0.28	0.60	0.60	0.01	0.33	0.33
Sat Flow, veh/h	903	599	1583	1353	1785	66	1774	1863	1583	1774	1863	1583
Grp Volume(v), veh/h	87	0	20	65	0	28	413	299	46	11	408	24
Grp Sat Flow(s),veh/h/ln	1502	0	1583	1353	0	1851	1774	1863	1583	1774	1863	1583
Q Serve(g_s), s	2.3	0.0	0.6	2.7	0.0	0.8	12.3	4.3	0.7	0.3	10.5	0.6
Cycle Q Clear(g_c), s	3.1	0.0	0.6	5.7	0.0	0.8	12.3	4.3	0.7	0.3	10.5	0.6
Prop In Lane	0.69		1.00	1.00		0.04	1.00		1.00	1.00		1.00
Lane Grp Cap(c), veh/h	272	0	172	202	0	201	489	1112	945	15	614	522
V/C Ratio(X)	0.32	0.00	0.12	0.32	0.00	0.14	0.84	0.27	0.05	0.74	0.66	0.05
Avail Cap(c_a), veh/h	752	0	679	635	0	794	952	2631	2237	476	2132	1812
HCM Platoon Ratio	1.00	1.00	1.00	1.00	1.00	1.00	1.00	1.00	1.00	1.00	1.00	1.00
Upstream Filter(I)	1.00	0.00	1.00	1.00	0.00	1.00	1.00	1.00	1.00	1.00	1.00	1.00
Uniform Delay (d), s/veh	23.5	0.0	22.5	26.3	0.0	22.6	19.1	5.4	4.7	27.7	16.1	12.8
Incr Delay (d2), s/veh	0.7	0.0	0.3	0.9	0.0	0.3	4.1	0.3	0.0	50.8	2.6	0.1
Initial Q Delay(d3),s/veh	0.0	0.0	0.0	0.0	0.0	0.0	0.0	0.0	0.0	0.0	0.0	0.0
%ile BackOfQ(50%),veh/ln	1.3	0.0	0.3	1.0	0.0	0.4	6.5	2.2	0.3	0.4	5.8	0.3
LnGrp Delay(d),s/veh	24.2	0.0	22.8	27.2	0.0	22.9	23.2	5.7	4.7	78.4	18.7	12.8
LnGrp LOS	C		C	C		C	C	A	A	E	B	B
Approach Vol, veh/h		107			93			758			443	
Approach Delay, s/veh		24.0			25.9			15.2			19.9	
Approach LOS		C			C			B			B	

Timer	1	2	3	4	5	6	7	8
Assigned Phs	1	2		4	5	6		8
Phs Duration (G+Y+Rc), s	5.5	39.4		11.1	20.4	24.4		11.1
Change Period (Y+Rc), s	5.0	6.0		5.0	5.0	6.0		5.0
Max Green Setting (Gmax), s	15.0	79.0		24.0	30.0	64.0		24.0
Max Q Clear Time (g_c+I1), s	2.3	6.3		5.1	14.3	12.5		7.7
Green Ext Time (p_c), s	0.0	4.4		0.4	1.2	5.9		0.2

Intersection Summary	
HCM 2010 Ctrl Delay	18.1
HCM 2010 LOS	B

Movement	EBL	EBT	EBR	WBL	WBT	WBR	NBL	NBT	NBR	SBL	SBT	SBR
Lane Configurations												
Traffic Volume (veh/h)	75	20	150	45	15	10	195	655	45	25	675	80
Future Volume (veh/h)	75	20	150	45	15	10	195	655	45	25	675	80
Number	7	4	14	3	8	18	5	2	12	1	6	16
Initial Q (Qb), veh	0	0	0	0	0	0	0	0	0	0	0	0
Ped-Bike Adj(A_pbT)	1.00		1.00	1.00		1.00	1.00		1.00	1.00		1.00
Parking Bus, Adj	1.00	1.00	1.00	1.00	1.00	1.00	1.00	1.00	1.00	1.00	1.00	1.00
Adj Sat Flow, veh/h/ln	1900	1863	1863	1863	1863	1900	1863	1863	1863	1863	1863	1863
Adj Flow Rate, veh/h	82	22	12	49	16	1	212	712	0	27	734	49
Adj No. of Lanes	0	1	1	1	1	0	1	1	1	1	1	1
Peak Hour Factor	0.92	0.92	0.92	0.92	0.92	0.92	0.92	0.92	0.92	0.92	0.92	0.92
Percent Heavy Veh, %	2	2	2	2	2	2	2	2	2	2	2	2
Cap, veh/h	257	55	204	222	224	14	400	1040	884	374	898	760
Arrive On Green	0.13	0.13	0.13	0.13	0.13	0.13	0.09	0.56	0.00	0.02	0.48	0.48
Sat Flow, veh/h	1074	423	1583	1369	1735	108	1774	1863	1583	1774	1863	1577
Grp Volume(v), veh/h	104	0	12	49	0	17	212	712	0	27	734	49
Grp Sat Flow(s),veh/h/ln	1498	0	1583	1369	0	1844	1774	1863	1583	1774	1863	1577
Q Serve(g_s), s	3.0	0.0	0.4	1.9	0.0	0.4	3.0	14.9	0.0	0.4	18.3	0.9
Cycle Q Clear(g_c), s	3.5	0.0	0.4	5.3	0.0	0.4	3.0	14.9	0.0	0.4	18.3	0.9
Prop In Lane	0.79		1.00	1.00		0.06	1.00		1.00	1.00		1.00
Lane Grp Cap(c), veh/h	312	0	204	222	0	238	400	1040	884	374	898	760
V/C Ratio(X)	0.33	0.00	0.06	0.22	0.00	0.07	0.53	0.68	0.00	0.07	0.82	0.06
Avail Cap(c_a), veh/h	798	0	728	675	0	848	722	1748	1485	831	1748	1479
HCM Platoon Ratio	1.00	1.00	1.00	1.00	1.00	1.00	1.00	1.00	1.00	1.00	1.00	1.00
Upstream Filter(I)	1.00	0.00	1.00	1.00	0.00	1.00	1.00	1.00	0.00	1.00	1.00	1.00
Uniform Delay (d), s/veh	22.1	0.0	20.8	24.6	0.0	20.8	10.0	8.6	0.0	8.0	12.0	7.5
Incr Delay (d2), s/veh	0.6	0.0	0.1	0.5	0.0	0.1	1.1	0.8	0.0	0.1	1.9	0.0
Initial Q Delay(d3),s/veh	0.0	0.0	0.0	0.0	0.0	0.0	0.0	0.0	0.0	0.0	0.0	0.0
%ile BackOfQ(50%),veh/ln	1.5	0.0	0.2	0.7	0.0	0.2	1.7	7.7	0.0	0.2	9.6	0.4
LnGrp Delay(d),s/veh	22.7	0.0	20.9	25.1	0.0	20.9	11.1	9.4	0.0	8.1	13.9	7.6
LnGrp LOS	C		C	C		C	B	A		A	B	A
Approach Vol, veh/h		116			66			924			810	
Approach Delay, s/veh		22.5			24.0			9.8			13.4	
Approach LOS		C			C			A			B	

Timer	1	2	3	4	5	6	7	8
Assigned Phs	1	2		4	5	6		8
Phs Duration (G+Y+Rc), s	6.0	36.3		12.0	10.2	32.2		12.0
Change Period (Y+Rc), s	5.0	6.0		5.0	5.0	6.0		5.0
Max Green Setting (Gmax), s	15.0	51.0		25.0	15.0	51.0		25.0
Max Q Clear Time (g_c+I1), s	2.4	16.9		5.5	5.0	20.3		7.3
Green Ext Time (p_c), s	0.0	5.5		0.5	0.4	5.9		0.1

Intersection Summary	
HCM 2010 Ctrl Delay	12.6
HCM 2010 LOS	B

Movement	EBL	EBT	EBR	WBL	WBT	WBR	NBL	NBT	NBR	SBL	SBT	SBR
Lane Configurations												
Traffic Volume (veh/h)	60	5	95	10	5	10	165	890	10	5	870	75
Future Volume (veh/h)	60	5	95	10	5	10	165	890	10	5	870	75
Number	7	4	14	3	8	18	5	2	12	1	6	16
Initial Q (Qb), veh	0	0	0	0	0	0	0	0	0	0	0	0
Ped-Bike Adj(A_pbT)	1.00		0.97	1.00		0.97	1.00		1.00	1.00		1.00
Parking Bus, Adj	1.00	1.00	1.00	1.00	1.00	1.00	1.00	1.00	1.00	1.00	1.00	1.00
Adj Sat Flow, veh/h/ln	1863	1863	1900	1863	1863	1863	1863	1863	1863	1863	1863	1863
Adj Flow Rate, veh/h	65	5	4	11	5	1	179	967	8	5	946	44
Adj No. of Lanes	1	1	0	1	1	1	1	1	1	1	1	1
Peak Hour Factor	0.92	0.92	0.92	0.92	0.92	0.92	0.92	0.92	0.92	0.92	0.92	0.92
Percent Heavy Veh, %	2	2	2	2	2	2	2	2	2	2	2	2
Cap, veh/h	85	103	83	14	130	106	216	1253	1065	7	1033	876
Arrive On Green	0.05	0.11	0.11	0.01	0.07	0.07	0.12	0.67	0.67	0.00	0.55	0.55
Sat Flow, veh/h	1774	944	756	1774	1863	1530	1774	1863	1583	1774	1863	1580
Grp Volume(v), veh/h	65	0	9	11	5	1	179	967	8	5	946	44
Grp Sat Flow(s),veh/h/ln	1774	0	1700	1774	1863	1530	1774	1863	1583	1774	1863	1580
Q Serve(g_s), s	3.5	0.0	0.5	0.6	0.2	0.1	9.6	34.3	0.2	0.3	44.6	1.2
Cycle Q Clear(g_c), s	3.5	0.0	0.5	0.6	0.2	0.1	9.6	34.3	0.2	0.3	44.6	1.2
Prop In Lane	1.00		0.44	1.00		1.00	1.00		1.00	1.00		1.00
Lane Grp Cap(c), veh/h	85	0	186	14	130	106	216	1253	1065	7	1033	876
V/C Ratio(X)	0.77	0.00	0.05	0.78	0.04	0.01	0.83	0.77	0.01	0.72	0.92	0.05
Avail Cap(c_a), veh/h	366	0	368	366	403	331	457	1253	1065	457	1247	1058
HCM Platoon Ratio	1.00	1.00	1.00	1.00	1.00	1.00	1.00	1.00	1.00	1.00	1.00	1.00
Upstream Filter(I)	1.00	0.00	1.00	1.00	1.00	1.00	1.00	1.00	1.00	1.00	1.00	1.00
Uniform Delay (d), s/veh	45.7	0.0	38.7	48.1	42.1	42.0	41.6	10.8	5.2	48.3	19.6	9.9
Incr Delay (d2), s/veh	13.3	0.0	0.1	61.0	0.1	0.0	7.8	3.0	0.0	86.6	9.4	0.0
Initial Q Delay(d3),s/veh	0.0	0.0	0.0	0.0	0.0	0.0	0.0	0.0	0.0	0.0	0.0	0.0
%ile BackOfQ(50%),veh/ln	2.0	0.0	0.2	0.5	0.1	0.0	5.1	18.5	0.1	0.3	25.3	0.5
LnGrp Delay(d),s/veh	59.0	0.0	38.8	109.1	42.2	42.1	49.4	13.8	5.2	134.9	29.0	9.9
LnGrp LOS	E		D	F	D	D	D	B	A	F	C	A
Approach Vol, veh/h		74			17			1154			995	
Approach Delay, s/veh		56.5			85.5			19.3			28.7	
Approach LOS		E			F			B			C	

Timer	1	2	3	4	5	6	7	8
Assigned Phs	1	2	3	4	5	6	7	8
Phs Duration (G+Y+Rc), s	5.4	70.3	5.8	15.6	16.8	58.8	9.6	11.8
Change Period (Y+Rc), s	5.0	5.0	5.0	5.0	5.0	5.0	5.0	5.0
Max Green Setting (Gmax), s	25.0	65.0	20.0	21.0	25.0	65.0	20.0	21.0
Max Q Clear Time (g_c+I1), s	2.3	36.3	2.6	2.5	11.6	46.6	5.5	2.2
Green Ext Time (p_c), s	0.0	8.9	0.0	0.0	0.4	7.2	0.1	0.0

Intersection Summary	
HCM 2010 Ctrl Delay	25.2
HCM 2010 LOS	C

Movement	EBL	EBT	EBR	WBL	WBT	WBR	NBL	NBT	NBR	SBL	SBT	SBR
Lane Configurations												
Traffic Volume (veh/h)	75	5	600	80	10	10	605	935	10	5	920	20
Future Volume (veh/h)	75	5	600	80	10	10	605	935	10	5	920	20
Number	3	8	18	7	4	14	1	6	16	5	2	12
Initial Q (Qb), veh	0	0	0	0	0	0	0	0	0	0	0	0
Ped-Bike Adj(A_pbT)	1.00		1.00	1.00		1.00	1.00		1.00	1.00		1.00
Parking Bus, Adj	1.00	1.00	1.00	1.00	1.00	1.00	1.00	1.00	1.00	1.00	1.00	1.00
Adj Sat Flow, veh/h/ln	1900	1863	1863	1900	1863	1900	1863	1863	1900	1863	1863	1863
Adj Flow Rate, veh/h	82	5	0	87	11	9	658	1016	11	5	1000	6
Adj No. of Lanes	0	1	1	0	1	0	1	2	0	1	2	1
Peak Hour Factor	0.92	0.92	0.92	0.92	0.92	0.92	0.92	0.92	0.92	0.92	0.92	0.92
Percent Heavy Veh, %	2	2	2	2	2	2	2	2	2	2	2	2
Cap, veh/h	187	7	134	173	14	12	696	2769	30	7	1357	607
Arrive On Green	0.09	0.08	0.00	0.09	0.08	0.08	0.39	0.77	0.77	0.00	0.38	0.38
Sat Flow, veh/h	1444	88	1583	1331	168	138	1774	3587	39	1774	3539	1583
Grp Volume(v), veh/h	87	0	0	107	0	0	658	501	526	5	1000	6
Grp Sat Flow(s),veh/h/ln	1532	0	1583	1637	0	0	1774	1770	1856	1774	1770	1583
Q Serve(g_s), s	0.0	0.0	0.0	0.8	0.0	0.0	38.6	9.7	9.7	0.3	26.2	0.3
Cycle Q Clear(g_c), s	5.6	0.0	0.0	6.4	0.0	0.0	38.6	9.7	9.7	0.3	26.2	0.3
Prop In Lane	0.94		1.00	0.81		0.08	1.00		0.02	1.00		1.00
Lane Grp Cap(c), veh/h	209	0	134	215	0	0	696	1366	1433	7	1357	607
V/C Ratio(X)	0.42	0.00	0.00	0.50	0.00	0.00	0.95	0.37	0.37	0.73	0.74	0.01
Avail Cap(c_a), veh/h	351	0	294	429	0	0	1169	1366	1433	1169	2267	1014
HCM Platoon Ratio	1.00	1.00	1.00	1.00	1.00	1.00	1.00	1.00	1.00	1.00	1.00	1.00
Upstream Filter(I)	1.00	0.00	0.00	1.00	0.00	0.00	1.00	1.00	1.00	1.00	1.00	1.00
Uniform Delay (d), s/veh	47.2	0.0	0.0	47.6	0.0	0.0	31.6	3.9	3.9	53.6	28.5	20.5
Incr Delay (d2), s/veh	1.3	0.0	0.0	1.8	0.0	0.0	6.8	0.4	0.3	42.0	1.7	0.0
Initial Q Delay(d3),s/veh	0.0	0.0	0.0	0.0	0.0	0.0	0.0	0.0	0.0	0.0	0.0	0.0
%ile BackOfQ(50%),veh/ln	2.5	0.0	0.0	3.1	0.0	0.0	20.1	4.7	5.0	0.2	13.1	0.1
LnGrp Delay(d),s/veh	48.5	0.0	0.0	49.4	0.0	0.0	38.4	4.3	4.2	95.5	30.2	20.6
LnGrp LOS	D			D			D	A	A	F	C	C
Approach Vol, veh/h		87			107			1685			1011	
Approach Delay, s/veh		48.5			49.4			17.6			30.5	
Approach LOS		D			D			B			C	

Timer	1	2	3	4	5	6	7	8
Assigned Phs	1	2		4	5	6		8
Phs Duration (G+Y+Rc), s	46.3	47.3		14.1	4.4	89.2		14.1
Change Period (Y+Rc), s	4.0	6.0		5.0	4.0	6.0		5.0
Max Green Setting (Gmax), s	71.0	69.0		25.0	71.0	69.0		20.0
Max Q Clear Time (g_c+I1), s	40.6	28.2		8.4	2.3	11.7		7.6
Green Ext Time (p_c), s	1.7	13.2		0.3	0.0	13.4		0.2

Intersection Summary	
HCM 2010 Ctrl Delay	24.2
HCM 2010 LOS	C

Movement	EBL	EBT	EBR	WBL	WBT	WBR	NBL	NBT	NBR	SBL	SBT	SBR
Lane Configurations												
Traffic Volume (veh/h)	50	5	140	15	0	5	135	1490	10	10	1610	60
Future Volume (veh/h)	50	5	140	15	0	5	135	1490	10	10	1610	60
Number	3	8	18	7	4	14	1	6	16	5	2	12
Initial Q (Qb), veh	0	0	0	0	0	0	0	0	0	0	0	0
Ped-Bike Adj(A_pbT)	0.97		0.96	0.97		0.96	1.00		1.00	1.00		1.00
Parking Bus, Adj	1.00	1.00	1.00	1.00	1.00	1.00	1.00	1.00	1.00	1.00	1.00	1.00
Adj Sat Flow, veh/h/ln	1900	1863	1863	1900	1863	1900	1863	1863	1900	1863	1863	1863
Adj Flow Rate, veh/h	54	5	5	16	0	1	147	1620	11	11	1750	40
Adj No. of Lanes	0	1	1	0	1	0	1	2	0	1	2	1
Peak Hour Factor	0.92	0.92	0.92	0.92	0.92	0.92	0.92	0.92	0.92	0.92	0.92	0.92
Percent Heavy Veh, %	2	2	2	2	2	2	2	2	2	2	2	2
Cap, veh/h	221	17	170	178	2	7	178	2663	18	14	2288	1024
Arrive On Green	0.12	0.11	0.11	0.12	0.00	0.11	0.10	0.74	0.74	0.01	0.65	0.65
Sat Flow, veh/h	1357	154	1520	959	18	61	1774	3603	24	1774	3539	1583
Grp Volume(v), veh/h	59	0	5	17	0	0	147	795	836	11	1750	40
Grp Sat Flow(s),veh/h/ln	1511	0	1520	1037	0	0	1774	1770	1858	1774	1770	1583
Q Serve(g_s), s	0.0	0.0	0.3	1.0	0.0	0.0	8.1	21.1	21.2	0.6	34.3	0.9
Cycle Q Clear(g_c), s	3.1	0.0	0.3	4.0	0.0	0.0	8.1	21.1	21.2	0.6	34.3	0.9
Prop In Lane	0.92		1.00	0.94		0.06	1.00		0.01	1.00		1.00
Lane Grp Cap(c), veh/h	254	0	170	197	0	0	178	1308	1373	14	2288	1024
V/C Ratio(X)	0.23	0.00	0.03	0.09	0.00	0.00	0.82	0.61	0.61	0.78	0.76	0.04
Avail Cap(c_a), veh/h	421	0	352	360	0	0	375	1533	1610	197	2710	1212
HCM Platoon Ratio	1.00	1.00	1.00	1.00	1.00	1.00	1.00	1.00	1.00	1.00	1.00	1.00
Upstream Filter(I)	1.00	0.00	1.00	1.00	0.00	0.00	1.00	1.00	1.00	1.00	1.00	1.00
Uniform Delay (d), s/veh	40.1	0.0	39.3	41.4	0.0	0.0	43.8	6.1	6.1	49.1	12.3	6.4
Incr Delay (d2), s/veh	0.2	0.0	0.0	0.1	0.0	0.0	3.6	1.0	1.0	28.8	1.6	0.0
Initial Q Delay(d3),s/veh	0.0	0.0	0.0	0.0	0.0	0.0	0.0	0.0	0.0	0.0	0.0	0.0
%ile BackOfQ(50%),veh/ln	1.5	0.0	0.1	0.4	0.0	0.0	4.1	10.5	11.1	0.4	17.0	0.4
LnGrp Delay(d),s/veh	40.2	0.0	39.3	41.5	0.0	0.0	47.4	7.2	7.1	77.9	13.8	6.4
LnGrp LOS	D		D	D			D	A	A	E	B	A
Approach Vol, veh/h		64			17			1778			1801	
Approach Delay, s/veh		40.2			41.5			10.5			14.1	
Approach LOS		D			D			B			B	

Timer	1	2	3	4	5	6	7	8
Assigned Phs	1	2		4	5	6		8
Phs Duration (G+Y+Rc), s	14.0	69.2		16.1	4.8	78.4		16.1
Change Period (Y+Rc), s	4.0	5.0		5.0	4.0	5.0		5.0
Max Green Setting (Gmax), s	21.0	76.0		23.0	11.0	86.0		23.0
Max Q Clear Time (g_c+I1), s	10.1	36.3		6.0	2.6	23.2		5.1
Green Ext Time (p_c), s	0.1	27.9		0.0	0.0	31.6		0.1

Intersection Summary	
HCM 2010 Ctrl Delay	12.9
HCM 2010 LOS	B

Movement	EBL	EBT	EBR	WBL	WBT	WBR	NBL	NBT	NBR	SBL	SBT	SBR
Lane Configurations												
Traffic Volume (veh/h)	75	5	175	70	5	45	125	1510	60	35	1770	95
Future Volume (veh/h)	75	5	175	70	5	45	125	1510	60	35	1770	95
Number	3	8	18	7	4	14	1	6	16	5	2	12
Initial Q (Qb), veh	0	0	0	0	0	0	0	0	0	0	0	0
Ped-Bike Adj(A_pbT)	0.99		0.99	0.99		0.99	1.00		1.00	1.00		1.00
Parking Bus, Adj	1.00	1.00	1.00	1.00	1.00	1.00	1.00	1.00	1.00	1.00	1.00	1.00
Adj Sat Flow, veh/h/ln	1900	1863	1863	1863	1863	1900	1863	1863	1863	1863	1863	1863
Adj Flow Rate, veh/h	82	5	27	76	5	1	136	1641	49	38	1924	81
Adj No. of Lanes	0	1	1	1	1	0	1	2	1	1	2	1
Peak Hour Factor	0.92	0.92	0.92	0.92	0.92	0.92	0.92	0.92	0.92	0.92	0.92	0.92
Percent Heavy Veh, %	2	2	2	2	2	2	2	2	2	2	2	2
Cap, veh/h	212	12	205	142	197	39	157	2656	1187	49	2440	1091
Arrive On Green	0.14	0.13	0.13	0.13	0.13	0.13	0.09	0.75	0.75	0.03	0.69	0.69
Sat Flow, veh/h	1298	89	1562	1358	1504	301	1774	3539	1582	1774	3539	1583
Grp Volume(v), veh/h	87	0	27	76	0	6	136	1641	49	38	1924	81
Grp Sat Flow(s),veh/h/ln	1387	0	1562	1358	0	1805	1774	1770	1582	1774	1770	1583
Q Serve(g_s), s	9.2	0.0	2.5	9.1	0.0	0.5	12.5	35.6	1.3	3.5	61.1	2.8
Cycle Q Clear(g_c), s	9.7	0.0	2.5	18.8	0.0	0.5	12.5	35.6	1.3	3.5	61.1	2.8
Prop In Lane	0.94		1.00	1.00		0.17	1.00		1.00	1.00		1.00
Lane Grp Cap(c), veh/h	233	0	205	142	0	237	157	2656	1187	49	2440	1091
V/C Ratio(X)	0.37	0.00	0.13	0.54	0.00	0.03	0.86	0.62	0.04	0.78	0.79	0.07
Avail Cap(c_a), veh/h	253	0	227	161	0	263	280	2656	1187	108	2440	1091
HCM Platoon Ratio	1.00	1.00	1.00	1.00	1.00	1.00	1.00	1.00	1.00	1.00	1.00	1.00
Upstream Filter(I)	1.00	0.00	1.00	1.00	0.00	1.00	0.68	0.68	0.68	1.00	1.00	1.00
Uniform Delay (d), s/veh	66.2	0.0	63.4	75.2	0.0	62.5	74.2	9.6	5.3	79.7	17.4	8.4
Incr Delay (d2), s/veh	1.0	0.0	0.3	3.1	0.0	0.0	3.7	0.7	0.0	9.3	2.7	0.1
Initial Q Delay(d3),s/veh	0.0	0.0	0.0	0.0	0.0	0.0	0.0	0.0	0.0	0.0	0.0	0.0
%ile BackOfQ(50%),veh/ln	3.7	0.0	1.1	3.5	0.0	0.2	6.3	17.4	0.6	1.8	30.6	1.3
LnGrp Delay(d),s/veh	67.2	0.0	63.7	78.4	0.0	62.5	77.9	10.3	5.3	89.0	20.1	8.5
LnGrp LOS	E		E	E		E	E	B	A	F	C	A
Approach Vol, veh/h		114			82			1826			2043	
Approach Delay, s/veh		66.4			77.2			15.2			20.9	
Approach LOS		E			E			B			C	

Timer	1	2	3	4	5	6	7	8
Assigned Phs	1	2		4	5	6		8
Phs Duration (G+Y+Rc), s	18.6	119.7		26.6	8.6	129.8		26.6
Change Period (Y+Rc), s	4.0	6.0		5.0	4.0	6.0		5.0
Max Green Setting (Gmax), s	26.0	100.0		24.0	10.0	116.0		24.0
Max Q Clear Time (g_c+I1), s	14.5	63.1		20.8	5.5	37.6		11.7
Green Ext Time (p_c), s	0.2	29.3		0.1	0.0	37.8		0.3

Intersection Summary	
HCM 2010 Ctrl Delay	20.8
HCM 2010 LOS	C

Movement	EBL	EBT	EBR	WBL	WBT	WBR	NBL	NBT	NBR	SBL	SBT	SBR
Lane Configurations												
Traffic Volume (veh/h)	350	5	740	15	0	5	500	1505	10	75	1760	190
Future Volume (veh/h)	350	5	740	15	0	5	500	1505	10	75	1760	190
Number	3	8	18	7	4	14	1	6	16	5	2	12
Initial Q (Qb), veh	0	0	0	0	0	0	0	0	0	0	0	0
Ped-Bike Adj(A_pbT)	1.00		0.98	1.00		0.96	1.00		1.00	1.00		1.00
Parking Bus, Adj	1.00	1.00	1.00	1.00	1.00	1.00	1.00	1.00	1.00	1.00	1.00	1.00
Adj Sat Flow, veh/h/ln	1863	1863	1863	1900	1863	1900	1863	1863	1900	1863	1863	1863
Adj Flow Rate, veh/h	384	0	609	16	0	1	543	1636	11	82	1913	177
Adj No. of Lanes	2	0	2	0	1	0	2	2	0	1	2	1
Peak Hour Factor	0.92	0.92	0.92	0.92	0.92	0.92	0.92	0.92	0.92	0.92	0.92	0.92
Percent Heavy Veh, %	2	2	2	2	2	2	2	2	2	2	2	2
Cap, veh/h	487	0	973	64	0	4	606	2517	17	107	2063	1134
Arrive On Green	0.14	0.00	0.13	0.04	0.00	0.03	0.18	0.70	0.69	0.06	0.58	0.58
Sat Flow, veh/h	3548	0	3119	1653	0	103	3442	3604	24	1774	3539	1583
Grp Volume(v), veh/h	384	0	609	17	0	0	543	803	844	82	1913	177
Grp Sat Flow(s),veh/h/ln	1774	0	1560	1756	0	0	1721	1770	1858	1774	1770	1583
Q Serve(g_s), s	25.9	0.0	33.0	2.3	0.0	0.0	38.2	62.0	62.2	11.3	121.5	8.8
Cycle Q Clear(g_c), s	25.9	0.0	33.0	2.3	0.0	0.0	38.2	62.0	62.2	11.3	121.5	8.8
Prop In Lane	1.00		1.00	0.94		0.06	1.00		0.01	1.00		1.00
Lane Grp Cap(c), veh/h	487	0	973	69	0	0	606	1236	1298	107	2063	1134
V/C Ratio(X)	0.79	0.00	0.63	0.25	0.00	0.00	0.90	0.65	0.65	0.76	0.93	0.16
Avail Cap(c_a), veh/h	487	0	973	220	0	0	806	1386	1456	107	2158	1176
HCM Platoon Ratio	1.00	1.00	1.00	1.00	1.00	1.00	1.00	1.00	1.00	1.00	1.00	1.00
Upstream Filter(I)	1.00	0.00	1.00	1.00	0.00	0.00	1.00	1.00	1.00	1.00	1.00	1.00
Uniform Delay (d), s/veh	103.3	0.0	73.4	115.6	0.0	0.0	99.8	20.6	20.6	114.6	46.9	11.2
Incr Delay (d2), s/veh	7.8	0.0	1.0	0.7	0.0	0.0	8.6	1.1	1.1	24.7	7.6	0.1
Initial Q Delay(d3),s/veh	0.0	0.0	0.0	0.0	0.0	0.0	0.0	0.0	0.0	0.0	0.0	0.0
%ile BackOfQ(50%),veh/ln	13.3	0.0	18.1	1.1	0.0	0.0	19.0	30.5	32.3	6.3	61.4	5.7
LnGrp Delay(d),s/veh	111.1	0.0	74.3	116.3	0.0	0.0	108.4	21.7	21.7	139.3	54.5	11.3
LnGrp LOS	F		E	F			F	C	C	F	D	B
Approach Vol, veh/h		993			17			2190			2172	
Approach Delay, s/veh		88.6			116.3			43.2			54.2	
Approach LOS		F			F			D			D	

Timer	1	2	3	4	5	6	7	8
Assigned Phs	1	2		4	5	6		8
Phs Duration (G+Y+Rc), s	47.6	148.4		13.7	19.0	177.0		38.0
Change Period (Y+Rc), s	6.0	6.0		7.0	6.0	6.0		7.0
Max Green Setting (Gmax), s	56.0	149.0		28.0	13.0	192.0		31.0
Max Q Clear Time (g_c+I1), s	40.2	123.5		4.3	13.3	64.2		35.0
Green Ext Time (p_c), s	1.4	18.9		0.0	0.0	22.8		0.0

Intersection Summary	
HCM 2010 Ctrl Delay	56.2
HCM 2010 LOS	E

Notes

Movement	EBL	EBT	EBR	WBL	WBT	WBR	NBL	NBT	NBR	SBL	SBT	SBR
Lane Configurations												
Traffic Volume (veh/h)	10	0	5	90	5	60	10	1975	90	85	2465	5
Future Volume (veh/h)	10	0	5	90	5	60	10	1975	90	85	2465	5
Number	3	8	18	7	4	14	1	6	16	5	2	12
Initial Q (Qb), veh	0	0	0	0	0	0	0	0	0	0	0	0
Ped-Bike Adj(A_pbT)	1.00		1.00	1.00		1.00	1.00		1.00	1.00		1.00
Parking Bus, Adj	1.00	1.00	1.00	1.00	1.00	1.00	1.00	1.00	1.00	1.00	1.00	1.00
Adj Sat Flow, veh/h/ln	1900	1863	1900	1863	1863	1900	1863	1863	1900	1863	1863	1900
Adj Flow Rate, veh/h	11	0	1	98	5	3	11	2147	96	92	2679	5
Adj No. of Lanes	0	1	0	1	1	0	1	2	0	1	2	0
Peak Hour Factor	0.92	0.92	0.92	0.92	0.92	0.92	0.92	0.92	0.92	0.92	0.92	0.92
Percent Heavy Veh, %	2	2	2	2	2	2	2	2	2	2	2	2
Cap, veh/h	160	2	10	182	96	58	18	2611	116	118	2946	5
Arrive On Green	0.09	0.00	0.08	0.09	0.09	0.08	0.01	1.00	1.00	0.07	0.81	0.81
Sat Flow, veh/h	1235	26	115	1410	1092	655	1774	3452	153	1774	3624	7
Grp Volume(v), veh/h	12	0	0	98	0	8	11	1093	1150	92	1308	1376
Grp Sat Flow(s),veh/h/ln	1376	0	0	1410	0	1747	1774	1770	1836	1774	1770	1862
Q Serve(g_s), s	0.8	0.0	0.0	7.4	0.0	0.6	0.8	0.0	0.2	6.9	71.5	71.7
Cycle Q Clear(g_c), s	1.4	0.0	0.0	8.8	0.0	0.6	0.8	0.0	0.2	6.9	71.5	71.7
Prop In Lane	0.92		0.08	1.00		0.38	1.00		0.08	1.00		0.00
Lane Grp Cap(c), veh/h	173	0	0	182	0	154	18	1338	1388	118	1438	1513
V/C Ratio(X)	0.07	0.00	0.00	0.54	0.00	0.05	0.62	0.82	0.83	0.78	0.91	0.91
Avail Cap(c_a), veh/h	299	0	0	308	0	311	145	1338	1388	250	1438	1513
HCM Platoon Ratio	1.00	1.00	1.00	1.00	1.00	1.00	1.33	1.33	1.33	1.00	1.00	1.00
Upstream Filter(I)	1.00	0.00	0.00	1.00	0.00	1.00	0.49	0.49	0.49	1.00	1.00	1.00
Uniform Delay (d), s/veh	56.9	0.0	0.0	60.0	0.0	56.5	66.3	0.0	0.0	62.0	9.1	9.1
Incr Delay (d2), s/veh	0.2	0.0	0.0	2.5	0.0	0.1	6.2	2.8	2.9	4.1	10.0	9.7
Initial Q Delay(d3),s/veh	0.0	0.0	0.0	0.0	0.0	0.0	0.0	0.0	0.0	0.0	0.0	0.0
%ile BackOfQ(50%),veh/ln	0.4	0.0	0.0	3.7	0.0	0.3	0.4	1.0	1.1	3.5	38.2	40.0
LnGrp Delay(d),s/veh	57.0	0.0	0.0	62.5	0.0	56.7	72.5	2.8	2.9	66.2	19.1	18.8
LnGrp LOS	E			E		E	E	A	A	E	B	B
Approach Vol, veh/h		12			106			2254			2776	
Approach Delay, s/veh		57.0			62.0			3.2			20.5	
Approach LOS		E			E			A			C	

Timer	1	2	3	4	5	6	7	8
Assigned Phs	1	2		4	5	6		8
Phs Duration (G+Y+Rc), s	5.4	113.7		15.9	13.0	106.1		15.9
Change Period (Y+Rc), s	4.0	5.0		5.0	4.0	5.0		5.0
Max Green Setting (Gmax), s	11.0	87.0		23.0	19.0	79.0		23.0
Max Q Clear Time (g_c+I1), s	2.8	73.7		10.8	8.9	2.2		3.4
Green Ext Time (p_c), s	0.0	13.2		0.2	0.1	61.9		0.0

Intersection Summary	
HCM 2010 Ctrl Delay	13.9
HCM 2010 LOS	B

Movement	EBL	EBT	EBR	WBL	WBT	WBR	NBL	NBT	NBR	SBL	SBT	SBR
Lane Configurations												
Traffic Volume (veh/h)	175	15	10	60	5	10	5	1900	20	5	2115	325
Future Volume (veh/h)	175	15	10	60	5	10	5	1900	20	5	2115	325
Number	3	8	18	7	4	14	1	6	16	5	2	12
Initial Q (Qb), veh	0	0	0	0	0	0	0	0	0	0	0	0
Ped-Bike Adj(A_pbT)	1.00		1.00	1.00		1.00	1.00		1.00	1.00		1.00
Parking Bus, Adj	1.00	1.00	1.00	1.00	1.00	1.00	1.00	1.00	1.00	1.00	1.00	1.00
Adj Sat Flow, veh/h/ln	1900	1863	1900	1900	1863	1900	1863	1863	1900	1863	1863	1863
Adj Flow Rate, veh/h	190	16	9	65	5	7	5	2065	22	5	2299	285
Adj No. of Lanes	0	1	0	0	1	0	1	2	0	1	2	1
Peak Hour Factor	0.92	0.92	0.92	0.92	0.92	0.92	0.92	0.92	0.92	0.92	0.92	0.92
Percent Heavy Veh, %	2	2	2	2	2	2	2	2	2	2	2	2
Cap, veh/h	268	18	10	273	22	25	7	2663	28	7	2627	1175
Arrive On Green	0.16	0.16	0.16	0.16	0.16	0.16	0.01	1.00	1.00	0.00	0.74	0.74
Sat Flow, veh/h	1321	111	63	1358	132	149	1774	3587	38	1774	3539	1583
Grp Volume(v), veh/h	215	0	0	77	0	0	5	1017	1070	5	2299	285
Grp Sat Flow(s),veh/h/ln	1495	0	0	1639	0	0	1774	1770	1856	1774	1770	1583
Q Serve(g_s), s	13.4	0.0	0.0	0.0	0.0	0.0	0.4	0.0	0.0	0.4	64.5	7.6
Cycle Q Clear(g_c), s	18.8	0.0	0.0	5.4	0.0	0.0	0.4	0.0	0.0	0.4	64.5	7.6
Prop In Lane	0.88		0.04	0.84		0.09	1.00		0.02	1.00		1.00
Lane Grp Cap(c), veh/h	297	0	0	319	0	0	7	1314	1378	7	2627	1175
V/C Ratio(X)	0.72	0.00	0.00	0.24	0.00	0.00	0.74	0.77	0.78	0.74	0.87	0.24
Avail Cap(c_a), veh/h	379	0	0	401	0	0	105	1314	1378	105	2627	1175
HCM Platoon Ratio	1.00	1.00	1.00	1.00	1.00	1.00	2.00	2.00	2.00	1.00	1.00	1.00
Upstream Filter(I)	1.00	0.00	0.00	1.00	0.00	0.00	0.54	0.54	0.54	0.22	0.22	0.22
Uniform Delay (d), s/veh	54.6	0.0	0.0	49.4	0.0	0.0	66.9	0.0	0.0	67.2	12.8	5.5
Incr Delay (d2), s/veh	4.9	0.0	0.0	0.4	0.0	0.0	26.8	2.5	2.4	12.2	1.0	0.1
Initial Q Delay(d3),s/veh	0.0	0.0	0.0	0.0	0.0	0.0	0.0	0.0	0.0	0.0	0.0	0.0
%ile BackOfQ(50%),veh/ln	8.2	0.0	0.0	2.6	0.0	0.0	0.2	0.9	0.9	0.2	31.4	3.4
LnGrp Delay(d),s/veh	59.5	0.0	0.0	49.7	0.0	0.0	93.8	2.5	2.4	79.4	13.8	5.6
LnGrp LOS	E			D			F	A	A	E	B	A
Approach Vol, veh/h		215			77			2092			2589	
Approach Delay, s/veh		59.5			49.7			2.6			13.0	
Approach LOS		E			D			A			B	

Timer	1	2	3	4	5	6	7	8
Assigned Phs	1	2		4	5	6		8
Phs Duration (G+Y+Rc), s	4.5	104.2		26.3	4.5	104.2		26.3
Change Period (Y+Rc), s	4.0	5.0		5.0	4.0	5.0		5.0
Max Green Setting (Gmax), s	8.0	84.0		29.0	8.0	84.0		29.0
Max Q Clear Time (g_c+I1), s	2.4	66.5		7.4	2.4	2.0		20.8
Green Ext Time (p_c), s	0.0	17.2		0.2	0.0	69.9		0.5

Intersection Summary	
HCM 2010 Ctrl Delay	11.2
HCM 2010 LOS	B

Movement	EBL	EBT	EBR	WBL	WBT	WBR	NBL	NBT	NBR	SBL	SBT	SBR
Lane Configurations												
Traffic Volume (veh/h)	180	35	45	95	25	20	55	1700	105	25	2050	150
Future Volume (veh/h)	180	35	45	95	25	20	55	1700	105	25	2050	150
Number	3	8	18	7	4	14	1	6	16	5	2	12
Initial Q (Qb), veh	0	0	0	0	0	0	0	0	0	0	0	0
Ped-Bike Adj(A_pbT)	0.98		0.97	0.99		0.97	1.00		1.00	1.00		1.00
Parking Bus, Adj	1.00	1.00	1.00	1.00	1.00	1.00	1.00	1.00	1.00	1.00	1.00	1.00
Adj Sat Flow, veh/h/ln	1900	1863	1863	1863	1863	1900	1863	1863	1900	1863	1863	1900
Adj Flow Rate, veh/h	196	38	7	103	27	2	60	1848	111	27	2228	159
Adj No. of Lanes	0	1	1	1	1	0	1	2	0	1	2	0
Peak Hour Factor	0.92	0.92	0.92	0.92	0.92	0.92	0.92	0.92	0.92	0.92	0.92	0.92
Percent Heavy Veh, %	2	2	2	2	2	2	2	2	2	2	2	2
Cap, veh/h	252	39	286	337	317	23	76	2399	143	34	2290	161
Arrive On Green	0.19	0.19	0.19	0.19	0.19	0.18	0.09	1.00	1.00	0.03	0.91	0.90
Sat Flow, veh/h	1095	212	1542	1347	1710	127	1774	3395	202	1774	3353	236
Grp Volume(v), veh/h	234	0	7	103	0	29	60	954	1005	27	1163	1224
Grp Sat Flow(s),veh/h/ln	1307	0	1542	1347	0	1836	1774	1770	1827	1774	1770	1820
Q Serve(g_s), s	22.3	0.0	0.5	0.0	0.0	1.8	4.5	0.0	0.0	2.0	64.5	78.9
Cycle Q Clear(g_c), s	24.1	0.0	0.5	7.9	0.0	1.8	4.5	0.0	0.0	2.0	64.5	78.9
Prop In Lane	0.84		1.00	1.00		0.07	1.00		0.11	1.00		0.13
Lane Grp Cap(c), veh/h	291	0	286	337	0	340	76	1251	1291	34	1209	1243
V/C Ratio(X)	0.80	0.00	0.02	0.31	0.00	0.09	0.79	0.76	0.78	0.80	0.96	0.98
Avail Cap(c_a), veh/h	291	0	286	337	0	340	79	1251	1291	53	1209	1243
HCM Platoon Ratio	1.00	1.00	1.00	1.00	1.00	1.00	2.00	2.00	2.00	1.33	1.33	1.33
Upstream Filter(I)	1.00	0.00	1.00	1.00	0.00	1.00	0.26	0.26	0.26	0.34	0.34	0.34
Uniform Delay (d), s/veh	55.5	0.0	45.0	48.0	0.0	45.6	61.1	0.0	0.0	65.5	4.9	5.7
Incr Delay (d2), s/veh	15.0	0.0	0.0	0.5	0.0	0.1	11.4	1.2	1.2	6.9	8.5	11.6
Initial Q Delay(d3),s/veh	0.0	0.0	0.0	0.0	0.0	0.0	0.0	0.0	0.0	0.0	0.0	0.0
%ile BackOfQ(50%),veh/ln	9.9	0.0	0.2	3.4	0.0	0.9	2.4	0.4	0.4	1.1	31.4	40.0
LnGrp Delay(d),s/veh	70.5	0.0	45.1	48.5	0.0	45.7	72.5	1.2	1.2	72.5	13.4	17.3
LnGrp LOS	E		D	D		D	E	A	A	E	B	B
Approach Vol, veh/h		241			132			2019			2414	
Approach Delay, s/veh		69.8			47.9			3.3			16.0	
Approach LOS		E			D			A			B	

Timer	1	2	3	4	5	6	7	8
Assigned Phs	1	2		4	5	6		8
Phs Duration (G+Y+Rc), s	9.8	96.2		29.0	6.6	99.4		29.0
Change Period (Y+Rc), s	4.0	5.0		5.0	4.0	5.0		5.0
Max Green Setting (Gmax), s	6.0	91.0		24.0	4.0	93.0		24.0
Max Q Clear Time (g_c+I1), s	6.5	80.9		9.9	4.0	2.0		26.1
Green Ext Time (p_c), s	0.0	9.8		0.4	0.0	55.4		0.0

Intersection Summary	
HCM 2010 Ctrl Delay	14.3
HCM 2010 LOS	B

Notes

Movement	EBL	EBT	EBR	WBL	WBT	WBR	NBL	NBT	NBR	SBL	SBT	SBR
Lane Configurations												
Traffic Volume (veh/h)	60	185	60	125	110	695	55	1090	195	630	1415	65
Future Volume (veh/h)	60	185	60	125	110	695	55	1090	195	630	1415	65
Number	7	4	14	3	8	18	1	6	16	5	2	12
Initial Q (Qb), veh	0	0	0	0	0	0	0	0	0	0	0	0
Ped-Bike Adj(A_pbT)	0.99		0.97	1.00		0.98	1.00		0.99	1.00		0.99
Parking Bus, Adj	1.00	1.00	1.00	1.00	1.00	1.00	1.00	1.00	1.00	1.00	1.00	1.00
Adj Sat Flow, veh/h/ln	1900	1863	1863	1863	1863	1863	1863	1863	1863	1863	1863	1900
Adj Flow Rate, veh/h	65	201	7	136	120	458	60	1185	132	685	1538	69
Adj No. of Lanes	0	1	1	1	1	1	1	2	1	2	2	0
Peak Hour Factor	0.92	0.92	0.92	0.92	0.92	0.92	0.92	0.92	0.92	0.92	0.92	0.92
Percent Heavy Veh, %	2	2	2	2	2	2	2	2	2	2	2	2
Cap, veh/h	93	223	297	215	566	472	77	1402	622	728	1945	87
Arrive On Green	0.19	0.19	0.19	0.08	0.30	0.30	0.04	0.40	0.40	0.42	1.00	1.00
Sat Flow, veh/h	311	1157	1539	1774	1863	1555	1774	3539	1571	3442	3450	154
Grp Volume(v), veh/h	266	0	7	136	120	458	60	1185	132	685	786	821
Grp Sat Flow(s),veh/h/ln	1468	0	1539	1774	1863	1555	1774	1770	1571	1721	1770	1835
Q Serve(g_s), s	21.3	0.0	0.5	8.0	6.5	39.2	4.5	41.0	7.5	25.8	0.0	0.0
Cycle Q Clear(g_c), s	24.0	0.0	0.5	8.0	6.5	39.2	4.5	41.0	7.5	25.8	0.0	0.0
Prop In Lane	0.24		1.00	1.00		1.00	1.00		1.00	1.00		0.08
Lane Grp Cap(c), veh/h	316	0	297	215	566	472	77	1402	622	728	998	1034
V/C Ratio(X)	0.84	0.00	0.02	0.63	0.21	0.97	0.78	0.85	0.21	0.94	0.79	0.79
Avail Cap(c_a), veh/h	316	0	297	229	566	472	276	1402	622	790	998	1034
HCM Platoon Ratio	1.00	1.00	1.00	1.00	1.00	1.00	1.00	1.00	1.00	2.00	2.00	2.00
Upstream Filter(I)	1.00	0.00	1.00	1.00	1.00	1.00	0.88	0.88	0.88	0.13	0.13	0.13
Uniform Delay (d), s/veh	53.3	0.0	44.2	39.8	35.0	46.4	63.9	37.0	26.9	38.2	0.0	0.0
Incr Delay (d2), s/veh	18.0	0.0	0.0	5.1	0.2	33.6	5.4	5.7	0.7	3.4	0.8	0.8
Initial Q Delay(d3),s/veh	0.0	0.0	0.0	0.0	0.0	0.0	0.0	0.0	0.0	0.0	0.0	0.0
%ile BackOfQ(50%),veh/ln	11.3	0.0	0.2	4.2	3.4	21.2	2.3	21.2	3.3	12.4	0.2	0.2
LnGrp Delay(d),s/veh	71.3	0.0	44.2	44.9	35.2	79.9	69.3	42.7	27.6	41.6	0.8	0.8
LnGrp LOS	E		D	D	D	E	E	D	C	D	A	A
Approach Vol, veh/h		273			714			1377			2292	
Approach Delay, s/veh		70.6			65.7			42.4			13.0	
Approach LOS		E			E			D			B	

Timer	1	2	3	4	5	6	7	8
Assigned Phs	1	2	3	4	5	6		8
Phs Duration (G+Y+Rc), s	9.9	80.1	15.0	30.0	32.5	57.5		45.0
Change Period (Y+Rc), s	4.0	5.0	5.0	5.0	4.0	5.0		5.0
Max Green Setting (Gmax), s	21.0	60.0	11.0	24.0	31.0	50.0		40.0
Max Q Clear Time (g_c+I1), s	6.5	2.0	10.0	26.0	27.8	43.0		41.2
Green Ext Time (p_c), s	0.1	29.8	0.0	0.0	0.8	5.3		0.0

Intersection Summary	
HCM 2010 Ctrl Delay	33.2
HCM 2010 LOS	C

Notes

APPENDIX C

LEVEL OF SERVICE CALCULATIONS

- Base Year 2027 WE Peak

Movement	EBL	EBT	EBR	WBL	WBT	WBR	NBL	NBT	NBR	SBL	SBT	SBR
Lane Configurations												
Traffic Volume (veh/h)	40	45	330	45	50	20	270	385	40	20	365	90
Future Volume (veh/h)	40	45	330	45	50	20	270	385	40	20	365	90
Number	7	4	14	3	8	18	5	2	12	1	6	16
Initial Q (Qb), veh	0	0	0	0	0	0	0	0	0	0	0	0
Ped-Bike Adj(A_pbT)	0.99		0.99	0.99		0.99	1.00		1.00	1.00		1.00
Parking Bus, Adj	1.00	1.00	1.00	1.00	1.00	1.00	1.00	1.00	1.00	1.00	1.00	1.00
Adj Sat Flow, veh/h/ln	1900	1863	1863	1863	1863	1900	1863	1863	1863	1863	1863	1863
Adj Flow Rate, veh/h	43	49	30	49	54	10	293	418	25	22	397	34
Adj No. of Lanes	0	1	1	1	1	0	1	1	1	1	1	1
Peak Hour Factor	0.92	0.92	0.92	0.92	0.92	0.92	0.92	0.92	0.92	0.92	0.92	0.92
Percent Heavy Veh, %	2	2	2	2	2	2	2	2	2	2	2	2
Cap, veh/h	172	120	188	229	183	34	372	999	847	28	637	541
Arrive On Green	0.12	0.12	0.12	0.12	0.12	0.12	0.21	0.54	0.54	0.02	0.34	0.34
Sat Flow, veh/h	534	996	1564	1303	1526	283	1774	1863	1580	1774	1863	1581
Grp Volume(v), veh/h	92	0	30	49	0	64	293	418	25	22	397	34
Grp Sat Flow(s),veh/h/ln	1530	0	1564	1303	0	1809	1774	1863	1580	1774	1863	1581
Q Serve(g_s), s	1.2	0.0	0.8	1.8	0.0	1.6	7.6	6.5	0.4	0.6	8.7	0.7
Cycle Q Clear(g_c), s	2.8	0.0	0.8	4.6	0.0	1.6	7.6	6.5	0.4	0.6	8.7	0.7
Prop In Lane	0.47		1.00	1.00		0.16	1.00		1.00	1.00		1.00
Lane Grp Cap(c), veh/h	292	0	188	229	0	217	372	999	847	28	637	541
V/C Ratio(X)	0.32	0.00	0.16	0.21	0.00	0.29	0.79	0.42	0.03	0.78	0.62	0.06
Avail Cap(c_a), veh/h	873	0	769	713	0	890	1091	3016	2559	545	2443	2074
HCM Platoon Ratio	1.00	1.00	1.00	1.00	1.00	1.00	1.00	1.00	1.00	1.00	1.00	1.00
Upstream Filter(I)	1.00	0.00	1.00	1.00	0.00	1.00	1.00	1.00	1.00	1.00	1.00	1.00
Uniform Delay (d), s/veh	20.1	0.0	19.3	22.3	0.0	19.6	18.2	6.8	5.3	23.9	13.4	10.8
Incr Delay (d2), s/veh	0.6	0.0	0.4	0.5	0.0	0.7	3.7	0.6	0.0	36.3	2.1	0.1
Initial Q Delay(d3),s/veh	0.0	0.0	0.0	0.0	0.0	0.0	0.0	0.0	0.0	0.0	0.0	0.0
%ile BackOfQ(50%),veh/ln	1.2	0.0	0.4	0.7	0.0	0.8	4.1	3.4	0.2	0.6	4.8	0.3
LnGrp Delay(d),s/veh	20.7	0.0	19.7	22.7	0.0	20.3	22.0	7.4	5.4	60.2	15.5	10.9
LnGrp LOS	C		B	C		C	C	A	A	E	B	B
Approach Vol, veh/h		122			113			736			453	
Approach Delay, s/veh		20.4			21.4			13.1			17.4	
Approach LOS		C			C			B			B	

Timer	1	2	3	4	5	6	7	8
Assigned Phs	1	2		4	5	6		8
Phs Duration (G+Y+Rc), s	5.8	32.2		10.9	15.2	22.7		10.9
Change Period (Y+Rc), s	5.0	6.0		5.0	5.0	6.0		5.0
Max Green Setting (Gmax), s	15.0	79.0		24.0	30.0	64.0		24.0
Max Q Clear Time (g_c+I1), s	2.6	8.5		4.8	9.6	10.7		6.6
Green Ext Time (p_c), s	0.0	6.2		0.5	0.8	5.8		0.4

Intersection Summary	
HCM 2010 Ctrl Delay	15.7
HCM 2010 LOS	B

Movement	EBL	EBT	EBR	WBL	WBT	WBR	NBL	NBT	NBR	SBL	SBT	SBR
Lane Configurations												
Traffic Volume (veh/h)	55	20	195	40	15	5	135	525	25	15	575	60
Future Volume (veh/h)	55	20	195	40	15	5	135	525	25	15	575	60
Number	7	4	14	3	8	18	5	2	12	1	6	16
Initial Q (Qb), veh	0	0	0	0	0	0	0	0	0	0	0	0
Ped-Bike Adj(A_pbT)	0.98		0.98	0.99		0.98	1.00		1.00	1.00		1.00
Parking Bus, Adj	1.00	1.00	1.00	1.00	1.00	1.00	1.00	1.00	1.00	1.00	1.00	1.00
Adj Sat Flow, veh/h/ln	1900	1863	1863	1863	1863	1900	1863	1863	1863	1863	1863	1863
Adj Flow Rate, veh/h	60	22	17	43	16	1	147	571	0	16	625	28
Adj No. of Lanes	0	1	1	1	1	0	1	1	1	1	1	1
Peak Hour Factor	0.92	0.92	0.92	0.92	0.92	0.92	0.92	0.92	0.92	0.92	0.92	0.92
Percent Heavy Veh, %	2	2	2	2	2	2	2	2	2	2	2	2
Cap, veh/h	269	78	218	282	243	15	412	935	795	413	811	687
Arrive On Green	0.14	0.14	0.14	0.14	0.14	0.14	0.08	0.50	0.00	0.01	0.44	0.44
Sat Flow, veh/h	957	559	1555	1344	1733	108	1774	1863	1583	1774	1863	1578
Grp Volume(v), veh/h	82	0	17	43	0	17	147	571	0	16	625	28
Grp Sat Flow(s),veh/h/ln	1516	0	1555	1344	0	1841	1774	1863	1583	1774	1863	1578
Q Serve(g_s), s	1.4	0.0	0.4	1.4	0.0	0.4	2.0	10.2	0.0	0.2	13.2	0.5
Cycle Q Clear(g_c), s	2.1	0.0	0.4	3.5	0.0	0.4	2.0	10.2	0.0	0.2	13.2	0.5
Prop In Lane	0.73		1.00	1.00		0.06	1.00		1.00	1.00		1.00
Lane Grp Cap(c), veh/h	347	0	218	282	0	258	412	935	795	413	811	687
V/C Ratio(X)	0.24	0.00	0.08	0.15	0.00	0.07	0.36	0.61	0.00	0.04	0.77	0.04
Avail Cap(c_a), veh/h	937	0	841	820	0	996	848	2055	1747	967	2055	1741
HCM Platoon Ratio	1.00	1.00	1.00	1.00	1.00	1.00	1.00	1.00	1.00	1.00	1.00	1.00
Upstream Filter(I)	1.00	0.00	1.00	1.00	0.00	1.00	1.00	1.00	0.00	1.00	1.00	1.00
Uniform Delay (d), s/veh	18.0	0.0	17.3	19.6	0.0	17.3	8.3	8.3	0.0	7.7	11.1	7.5
Incr Delay (d2), s/veh	0.3	0.0	0.2	0.2	0.0	0.1	0.5	0.7	0.0	0.0	1.6	0.0
Initial Q Delay(d3),s/veh	0.0	0.0	0.0	0.0	0.0	0.0	0.0	0.0	0.0	0.0	0.0	0.0
%ile BackOfQ(50%),veh/ln	1.0	0.0	0.2	0.5	0.0	0.2	1.0	5.2	0.0	0.1	7.0	0.2
LnGrp Delay(d),s/veh	18.3	0.0	17.4	19.9	0.0	17.4	8.8	8.9	0.0	7.7	12.7	7.5
LnGrp LOS	B		B	B		B	A	A		A	B	A
Approach Vol, veh/h		99			60			718			669	
Approach Delay, s/veh		18.2			19.2			8.9			12.4	
Approach LOS		B			B			A			B	

Timer	1	2	3	4	5	6	7	8
Assigned Phs	1	2		4	5	6		8
Phs Duration (G+Y+Rc), s	5.6	29.2		11.5	8.6	26.1		11.5
Change Period (Y+Rc), s	5.0	6.0		5.0	5.0	6.0		5.0
Max Green Setting (Gmax), s	15.0	51.0		25.0	15.0	51.0		25.0
Max Q Clear Time (g_c+I1), s	2.2	12.2		4.1	4.0	15.2		5.5
Green Ext Time (p_c), s	0.0	4.1		0.4	0.3	4.7		0.1

Intersection Summary	
HCM 2010 Ctrl Delay	11.4
HCM 2010 LOS	B

Movement	EBL	EBT	EBR	WBL	WBT	WBR	NBL	NBT	NBR	SBL	SBT	SBR
Lane Configurations												
Traffic Volume (veh/h)	40	5	85	10	5	10	80	630	15	5	770	50
Future Volume (veh/h)	40	5	85	10	5	10	80	630	15	5	770	50
Number	7	4	14	3	8	18	5	2	12	1	6	16
Initial Q (Qb), veh	0	0	0	0	0	0	0	0	0	0	0	0
Ped-Bike Adj(A_pbT)	1.00		0.99	1.00		1.00	1.00		1.00	1.00		1.00
Parking Bus, Adj	1.00	1.00	1.00	1.00	1.00	1.00	1.00	1.00	1.00	1.00	1.00	1.00
Adj Sat Flow, veh/h/ln	1863	1863	1900	1863	1863	1863	1863	1863	1863	1863	1863	1863
Adj Flow Rate, veh/h	43	5	4	11	5	1	87	685	11	5	837	31
Adj No. of Lanes	1	1	0	1	1	1	1	1	1	1	1	1
Peak Hour Factor	0.92	0.92	0.92	0.92	0.92	0.92	0.92	0.92	0.92	0.92	0.92	0.92
Percent Heavy Veh, %	2	2	2	2	2	2	2	2	2	2	2	2
Cap, veh/h	58	99	79	20	152	129	115	1093	929	7	979	832
Arrive On Green	0.03	0.10	0.10	0.01	0.08	0.08	0.06	0.59	0.59	0.00	0.53	0.53
Sat Flow, veh/h	1774	955	764	1774	1863	1583	1774	1863	1583	1774	1863	1582
Grp Volume(v), veh/h	43	0	9	11	5	1	87	685	11	5	837	31
Grp Sat Flow(s),veh/h/ln	1774	0	1719	1774	1863	1583	1774	1863	1583	1774	1863	1582
Q Serve(g_s), s	1.6	0.0	0.3	0.4	0.2	0.0	3.3	16.3	0.2	0.2	26.2	0.6
Cycle Q Clear(g_c), s	1.6	0.0	0.3	0.4	0.2	0.0	3.3	16.3	0.2	0.2	26.2	0.6
Prop In Lane	1.00		0.44	1.00		1.00	1.00		1.00	1.00		1.00
Lane Grp Cap(c), veh/h	58	0	177	20	152	129	115	1093	929	7	979	832
V/C Ratio(X)	0.74	0.00	0.05	0.56	0.03	0.01	0.76	0.63	0.01	0.71	0.85	0.04
Avail Cap(c_a), veh/h	524	0	533	524	577	491	655	1787	1519	655	1787	1518
HCM Platoon Ratio	1.00	1.00	1.00	1.00	1.00	1.00	1.00	1.00	1.00	1.00	1.00	1.00
Upstream Filter(I)	1.00	0.00	1.00	1.00	1.00	1.00	1.00	1.00	1.00	1.00	1.00	1.00
Uniform Delay (d), s/veh	32.5	0.0	27.4	33.3	28.7	28.6	31.2	9.2	5.8	33.7	13.8	7.8
Incr Delay (d2), s/veh	16.7	0.0	0.1	22.8	0.1	0.0	9.7	0.6	0.0	82.4	2.3	0.0
Initial Q Delay(d3),s/veh	0.0	0.0	0.0	0.0	0.0	0.0	0.0	0.0	0.0	0.0	0.0	0.0
%ile BackOfQ(50%),veh/ln	1.1	0.0	0.2	0.3	0.1	0.0	1.9	8.4	0.1	0.3	13.9	0.3
LnGrp Delay(d),s/veh	49.1	0.0	27.5	56.1	28.7	28.6	40.9	9.8	5.8	116.1	16.1	7.8
LnGrp LOS	D		C	E	C	C	D	A	A	F	B	A
Approach Vol, veh/h		52			17			783			873	
Approach Delay, s/veh		45.4			46.5			13.2			16.4	
Approach LOS		D			D			B			B	

Timer	1	2	3	4	5	6	7	8
Assigned Phs	1	2	3	4	5	6	7	8
Phs Duration (G+Y+Rc), s	5.3	44.7	5.7	12.0	9.4	40.6	7.2	10.5
Change Period (Y+Rc), s	5.0	5.0	5.0	5.0	5.0	5.0	5.0	5.0
Max Green Setting (Gmax), s	25.0	65.0	20.0	21.0	25.0	65.0	20.0	21.0
Max Q Clear Time (g_c+I1), s	2.2	18.3	2.4	2.3	5.3	28.2	3.6	2.2
Green Ext Time (p_c), s	0.0	5.4	0.0	0.0	0.2	7.4	0.1	0.0

Intersection Summary	
HCM 2010 Ctrl Delay	16.1
HCM 2010 LOS	B

Movement	EBL	EBT	EBR	WBL	WBT	WBR	NBL	NBT	NBR	SBL	SBT	SBR
Lane Configurations												
Traffic Volume (veh/h)	50	10	595	10	0	5	410	660	5	0	830	50
Future Volume (veh/h)	50	10	595	10	0	5	410	660	5	0	830	50
Number	3	8	18	7	4	14	1	6	16	5	2	12
Initial Q (Qb), veh	0	0	0	0	0	0	0	0	0	0	0	0
Ped-Bike Adj(A_pbT)	1.00		1.00	1.00		1.00	1.00		1.00	1.00		1.00
Parking Bus, Adj	1.00	1.00	1.00	1.00	1.00	1.00	1.00	1.00	1.00	1.00	1.00	1.00
Adj Sat Flow, veh/h/ln	1900	1863	1863	1900	1863	1900	1863	1863	1900	1863	1863	1863
Adj Flow Rate, veh/h	54	11	0	11	0	1	446	717	5	0	902	18
Adj No. of Lanes	0	1	1	0	1	0	1	2	0	1	2	1
Peak Hour Factor	0.92	0.92	0.92	0.92	0.92	0.92	0.92	0.92	0.92	0.92	0.92	0.92
Percent Heavy Veh, %	2	2	2	2	2	2	2	2	2	2	2	2
Cap, veh/h	175	15	92	190	4	8	509	2775	19	3	1490	664
Arrive On Green	0.07	0.06	0.00	0.07	0.00	0.06	0.29	0.77	0.77	0.00	0.42	0.42
Sat Flow, veh/h	1240	253	1583	1422	64	135	1774	3603	25	1774	3539	1578
Grp Volume(v), veh/h	65	0	0	12	0	0	446	352	370	0	902	18
Grp Sat Flow(s),veh/h/ln	1493	0	1583	1622	0	0	1774	1770	1858	1774	1770	1578
Q Serve(g_s), s	2.3	0.0	0.0	0.0	0.0	0.0	15.4	3.7	3.7	0.0	12.7	0.4
Cycle Q Clear(g_c), s	2.7	0.0	0.0	0.4	0.0	0.0	15.4	3.7	3.7	0.0	12.7	0.4
Prop In Lane	0.83		1.00	0.92		0.08	1.00		0.01	1.00		1.00
Lane Grp Cap(c), veh/h	213	0	92	227	0	0	509	1363	1431	3	1490	664
V/C Ratio(X)	0.31	0.00	0.00	0.05	0.00	0.00	0.88	0.26	0.26	0.00	0.61	0.03
Avail Cap(c_a), veh/h	585	0	494	696	0	0	1965	1905	2000	1965	3810	1698
HCM Platoon Ratio	1.00	1.00	1.00	1.00	1.00	1.00	1.00	1.00	1.00	1.00	1.00	1.00
Upstream Filter(I)	1.00	0.00	0.00	1.00	0.00	0.00	1.00	1.00	1.00	0.00	1.00	1.00
Uniform Delay (d), s/veh	29.2	0.0	0.0	28.2	0.0	0.0	21.8	2.1	2.1	0.0	14.4	10.9
Incr Delay (d2), s/veh	0.8	0.0	0.0	0.1	0.0	0.0	1.9	0.2	0.2	0.0	0.9	0.0
Initial Q Delay(d3),s/veh	0.0	0.0	0.0	0.0	0.0	0.0	0.0	0.0	0.0	0.0	0.0	0.0
%ile BackOfQ(50%),veh/ln	1.1	0.0	0.0	0.2	0.0	0.0	7.7	1.8	1.9	0.0	6.3	0.2
LnGrp Delay(d),s/veh	30.0	0.0	0.0	28.3	0.0	0.0	23.7	2.3	2.3	0.0	15.3	10.9
LnGrp LOS	C			C			C	A	A		B	B
Approach Vol, veh/h		65			12			1168			920	
Approach Delay, s/veh		30.0			28.3			10.5			15.2	
Approach LOS		C			C			B			B	

Timer	1	2	3	4	5	6	7	8
Assigned Phs	1	2		4	5	6		8
Phs Duration (G+Y+Rc), s	22.4	33.0		8.7	0.0	55.4		8.7
Change Period (Y+Rc), s	4.0	6.0		5.0	4.0	6.0		5.0
Max Green Setting (Gmax), s	71.0	69.0		25.0	71.0	69.0		20.0
Max Q Clear Time (g_c+I1), s	17.4	14.7		2.4	0.0	5.7		4.7
Green Ext Time (p_c), s	1.0	12.3		0.0	0.0	8.0		0.1

Intersection Summary	
HCM 2010 Ctrl Delay	13.2
HCM 2010 LOS	B

Movement	EBL	EBT	EBR	WBL	WBT	WBR	NBL	NBT	NBR	SBL	SBT	SBR
Lane Configurations												
Traffic Volume (veh/h)	55	5	145	15	5	15	105	1020	20	10	1400	65
Future Volume (veh/h)	55	5	145	15	5	15	105	1020	20	10	1400	65
Number	3	8	18	7	4	14	1	6	16	5	2	12
Initial Q (Qb), veh	0	0	0	0	0	0	0	0	0	0	0	0
Ped-Bike Adj(A_pbT)	0.98		0.98	0.98		0.98	1.00		1.00	1.00		1.00
Parking Bus, Adj	1.00	1.00	1.00	1.00	1.00	1.00	1.00	1.00	1.00	1.00	1.00	1.00
Adj Sat Flow, veh/h/ln	1900	1863	1863	1900	1863	1900	1863	1863	1900	1863	1863	1863
Adj Flow Rate, veh/h	60	5	6	16	5	1	114	1109	21	11	1522	41
Adj No. of Lanes	0	1	1	0	1	0	1	2	0	1	2	1
Peak Hour Factor	0.92	0.92	0.92	0.92	0.92	0.92	0.92	0.92	0.92	0.92	0.92	0.92
Percent Heavy Veh, %	2	2	2	2	2	2	2	2	2	2	2	2
Cap, veh/h	211	14	136	142	34	5	146	2569	49	14	2298	1026
Arrive On Green	0.10	0.09	0.09	0.10	0.09	0.09	0.08	0.72	0.72	0.01	0.65	0.65
Sat Flow, veh/h	1380	155	1546	704	387	52	1774	3553	67	1774	3539	1580
Grp Volume(v), veh/h	65	0	6	22	0	0	114	552	578	11	1522	41
Grp Sat Flow(s),veh/h/ln	1535	0	1546	1143	0	0	1774	1770	1851	1774	1770	1580
Q Serve(g_s), s	0.0	0.0	0.3	0.2	0.0	0.0	4.9	9.7	9.7	0.5	20.5	0.7
Cycle Q Clear(g_c), s	2.7	0.0	0.3	2.8	0.0	0.0	4.9	9.7	9.7	0.5	20.5	0.7
Prop In Lane	0.92		1.00	0.73		0.05	1.00		0.04	1.00		1.00
Lane Grp Cap(c), veh/h	244	0	136	196	0	0	146	1280	1338	14	2298	1026
V/C Ratio(X)	0.27	0.00	0.04	0.11	0.00	0.00	0.78	0.43	0.43	0.76	0.66	0.04
Avail Cap(c_a), veh/h	538	0	458	502	0	0	480	1962	2052	252	3467	1547
HCM Platoon Ratio	1.00	1.00	1.00	1.00	1.00	1.00	1.00	1.00	1.00	1.00	1.00	1.00
Upstream Filter(I)	1.00	0.00	1.00	1.00	0.00	0.00	1.00	1.00	1.00	1.00	1.00	1.00
Uniform Delay (d), s/veh	33.0	0.0	32.4	32.5	0.0	0.0	34.9	4.3	4.3	38.4	8.4	4.9
Incr Delay (d2), s/veh	0.2	0.0	0.0	0.1	0.0	0.0	3.5	0.5	0.5	25.5	0.7	0.0
Initial Q Delay(d3),s/veh	0.0	0.0	0.0	0.0	0.0	0.0	0.0	0.0	0.0	0.0	0.0	0.0
%ile BackOfQ(50%),veh/ln	1.3	0.0	0.1	0.4	0.0	0.0	2.5	4.8	5.0	0.3	10.2	0.3
LnGrp Delay(d),s/veh	33.2	0.0	32.4	32.6	0.0	0.0	38.4	4.8	4.8	63.9	9.1	4.9
LnGrp LOS	C		C	C			D	A	A	E	A	A
Approach Vol, veh/h		71			22			1244			1574	
Approach Delay, s/veh		33.2			32.6			7.9			9.4	
Approach LOS		C			C			A			A	

Timer	1	2	3	4	5	6	7	8
Assigned Phs	1	2		4	5	6		8
Phs Duration (G+Y+Rc), s	10.4	55.4		11.8	4.6	61.1		11.8
Change Period (Y+Rc), s	4.0	5.0		5.0	4.0	5.0		5.0
Max Green Setting (Gmax), s	21.0	76.0		23.0	11.0	86.0		23.0
Max Q Clear Time (g_c+I1), s	6.9	22.5		4.8	2.5	11.7		4.7
Green Ext Time (p_c), s	0.1	27.8		0.0	0.0	16.3		0.1

Intersection Summary	
HCM 2010 Ctrl Delay	9.5
HCM 2010 LOS	A

Movement	EBL	EBT	EBR	WBL	WBT	WBR	NBL	NBT	NBR	SBL	SBT	SBR
Lane Configurations												
Traffic Volume (veh/h)	60	5	180	45	5	35	110	1115	50	30	1480	75
Future Volume (veh/h)	60	5	180	45	5	35	110	1115	50	30	1480	75
Number	3	8	18	7	4	14	1	6	16	5	2	12
Initial Q (Qb), veh	0	0	0	0	0	0	0	0	0	0	0	0
Ped-Bike Adj(A_pbT)	1.00		1.00	1.00		1.00	1.00		1.00	1.00		1.00
Parking Bus, Adj	1.00	1.00	1.00	1.00	1.00	1.00	1.00	1.00	1.00	1.00	1.00	1.00
Adj Sat Flow, veh/h/ln	1900	1863	1863	1863	1863	1900	1863	1863	1863	1863	1863	1863
Adj Flow Rate, veh/h	65	5	11	49	5	2	120	1212	34	33	1609	47
Adj No. of Lanes	0	1	1	1	1	0	1	2	1	1	2	1
Peak Hour Factor	0.92	0.92	0.92	0.92	0.92	0.92	0.92	0.92	0.92	0.92	0.92	0.92
Percent Heavy Veh, %	2	2	2	2	2	2	2	2	2	2	2	2
Cap, veh/h	263	17	223	217	179	71	153	2309	1033	56	2116	946
Arrive On Green	0.15	0.14	0.14	0.14	0.14	0.14	0.09	0.65	0.65	0.03	0.60	0.60
Sat Flow, veh/h	1292	121	1577	1387	1265	506	1774	3539	1583	1774	3539	1583
Grp Volume(v), veh/h	70	0	11	49	0	7	120	1212	34	33	1609	47
Grp Sat Flow(s),veh/h/ln	1413	0	1577	1387	0	1771	1774	1770	1583	1774	1770	1583
Q Serve(g_s), s	3.6	0.0	0.5	2.8	0.0	0.3	5.7	15.6	0.7	1.6	28.8	1.1
Cycle Q Clear(g_c), s	3.9	0.0	0.5	6.7	0.0	0.3	5.7	15.6	0.7	1.6	28.8	1.1
Prop In Lane	0.93		1.00	1.00		0.29	1.00		1.00	1.00		1.00
Lane Grp Cap(c), veh/h	297	0	223	217	0	250	153	2309	1033	56	2116	946
V/C Ratio(X)	0.24	0.00	0.05	0.23	0.00	0.03	0.78	0.52	0.03	0.59	0.76	0.05
Avail Cap(c_a), veh/h	494	0	441	409	0	495	434	2844	1272	248	2473	1106
HCM Platoon Ratio	1.00	1.00	1.00	1.00	1.00	1.00	1.00	1.00	1.00	1.00	1.00	1.00
Upstream Filter(I)	1.00	0.00	1.00	1.00	0.00	1.00	1.00	1.00	1.00	1.00	1.00	1.00
Uniform Delay (d), s/veh	32.9	0.0	31.9	36.4	0.0	31.8	38.5	7.9	5.3	41.0	12.7	7.2
Incr Delay (d2), s/veh	0.4	0.0	0.1	0.5	0.0	0.0	3.3	0.4	0.0	3.6	1.7	0.0
Initial Q Delay(d3),s/veh	0.0	0.0	0.0	0.0	0.0	0.0	0.0	0.0	0.0	0.0	0.0	0.0
%ile BackOfQ(50%),veh/ln	1.5	0.0	0.2	1.1	0.0	0.1	2.9	7.5	0.3	0.8	14.3	0.5
LnGrp Delay(d),s/veh	33.3	0.0	32.0	36.9	0.0	31.8	41.8	8.3	5.3	44.6	14.4	7.2
LnGrp LOS	C		C	D		C	D	A	A	D	B	A
Approach Vol, veh/h		81			56			1366			1689	
Approach Delay, s/veh		33.2			36.2			11.2			14.8	
Approach LOS		C			D			B			B	

Timer	1	2	3	4	5	6	7	8
Assigned Phs	1	2		4	5	6		8
Phs Duration (G+Y+Rc), s	11.4	57.3		17.1	6.7	62.0		17.1
Change Period (Y+Rc), s	4.0	6.0		5.0	4.0	6.0		5.0
Max Green Setting (Gmax), s	21.0	60.0		24.0	12.0	69.0		24.0
Max Q Clear Time (g_c+I1), s	7.7	30.8		8.7	3.6	17.6		5.9
Green Ext Time (p_c), s	0.2	20.5		0.1	0.0	19.2		0.2

Intersection Summary	
HCM 2010 Ctrl Delay	14.1
HCM 2010 LOS	B

Movement	EBL	EBT	EBR	WBL	WBT	WBR	NBL	NBT	NBR	SBL	SBT	SBR
Lane Configurations												
Traffic Volume (veh/h)	300	5	590	15	5	20	440	1175	15	55	1425	220
Future Volume (veh/h)	300	5	590	15	5	20	440	1175	15	55	1425	220
Number	3	8	18	7	4	14	1	6	16	5	2	12
Initial Q (Qb), veh	0	0	0	0	0	0	0	0	0	0	0	0
Ped-Bike Adj(A_pbT)	1.00		1.00	1.00		1.00	1.00		1.00	1.00		1.00
Parking Bus, Adj	1.00	1.00	1.00	1.00	1.00	1.00	1.00	1.00	1.00	1.00	1.00	1.00
Adj Sat Flow, veh/h/ln	1863	1863	1863	1900	1863	1900	1863	1863	1900	1863	1863	1863
Adj Flow Rate, veh/h	330	0	436	16	5	7	478	1277	16	60	1549	196
Adj No. of Lanes	2	0	2	0	1	0	2	2	0	1	2	1
Peak Hour Factor	0.92	0.92	0.92	0.92	0.92	0.92	0.92	0.92	0.92	0.92	0.92	0.92
Percent Heavy Veh, %	2	2	2	2	2	2	2	2	2	2	2	2
Cap, veh/h	544	0	995	40	13	18	576	2325	29	103	1912	1088
Arrive On Green	0.15	0.00	0.15	0.04	0.04	0.02	0.17	0.65	0.64	0.06	0.54	0.54
Sat Flow, veh/h	3548	0	3167	992	310	434	3442	3580	45	1774	3539	1582
Grp Volume(v), veh/h	330	0	436	28	0	0	478	631	662	60	1549	196
Grp Sat Flow(s),veh/h/ln	1774	0	1583	1737	0	0	1721	1770	1855	1774	1770	1582
Q Serve(g_s), s	14.1	0.0	17.7	2.6	0.0	0.0	21.8	31.5	31.5	5.3	58.0	7.2
Cycle Q Clear(g_c), s	14.1	0.0	17.7	2.6	0.0	0.0	21.8	31.5	31.5	5.3	58.0	7.2
Prop In Lane	1.00		1.00	0.57		0.25	1.00		0.02	1.00		1.00
Lane Grp Cap(c), veh/h	544	0	995	71	0	0	576	1149	1205	103	1912	1088
V/C Ratio(X)	0.61	0.00	0.44	0.40	0.00	0.00	0.83	0.55	0.55	0.58	0.81	0.18
Avail Cap(c_a), veh/h	745	0	1175	332	0	0	1232	2119	2221	164	3298	1708
HCM Platoon Ratio	1.00	1.00	1.00	1.00	1.00	1.00	1.00	1.00	1.00	1.00	1.00	1.00
Upstream Filter(I)	1.00	0.00	1.00	1.00	0.00	0.00	1.00	1.00	1.00	1.00	1.00	1.00
Uniform Delay (d), s/veh	64.0	0.0	44.2	76.2	0.0	0.0	65.2	15.5	15.5	74.4	30.5	9.0
Incr Delay (d2), s/veh	0.4	0.0	0.1	1.3	0.0	0.0	1.2	0.6	0.6	2.0	1.2	0.1
Initial Q Delay(d3),s/veh	0.0	0.0	0.0	0.0	0.0	0.0	0.0	0.0	0.0	0.0	0.0	0.0
%ile BackOfQ(50%),veh/ln	7.0	0.0	7.8	1.3	0.0	0.0	10.5	15.4	16.2	2.7	28.5	4.7
LnGrp Delay(d),s/veh	64.5	0.0	44.3	77.5	0.0	0.0	66.5	16.1	16.0	76.4	31.7	9.2
LnGrp LOS	E		D	E			E	B	B	E	C	A
Approach Vol, veh/h		766			28			1771			1805	
Approach Delay, s/veh		53.0			77.5			29.7			30.7	
Approach LOS		D			E			C			C	

Timer	1	2	3	4	5	6	7	8
Assigned Phs	1	2		4	5	6		8
Phs Duration (G+Y+Rc), s	31.1	91.5		10.6	13.4	109.2		28.8
Change Period (Y+Rc), s	6.0	6.0		7.0	6.0	6.0		7.0
Max Green Setting (Gmax), s	56.0	149.0		28.0	13.0	192.0		31.0
Max Q Clear Time (g_c+I1), s	23.8	60.0		4.6	7.3	33.5		19.7
Green Ext Time (p_c), s	1.3	25.5		0.0	0.0	13.1		2.1

Intersection Summary	
HCM 2010 Ctrl Delay	34.5
HCM 2010 LOS	C

Notes

Movement	EBL	EBT	EBR	WBL	WBT	WBR	NBL	NBT	NBR	SBL	SBT	SBR
Lane Configurations												
Traffic Volume (veh/h)	5	0	5	135	5	60	5	1520	90	90	2020	10
Future Volume (veh/h)	5	0	5	135	5	60	5	1520	90	90	2020	10
Number	3	8	18	7	4	14	1	6	16	5	2	12
Initial Q (Qb), veh	0	0	0	0	0	0	0	0	0	0	0	0
Ped-Bike Adj(A_pbT)	1.00		1.00	1.00		1.00	1.00		1.00	1.00		1.00
Parking Bus, Adj	1.00	1.00	1.00	1.00	1.00	1.00	1.00	1.00	1.00	1.00	1.00	1.00
Adj Sat Flow, veh/h/ln	1900	1863	1900	1863	1863	1900	1863	1863	1900	1863	1863	1900
Adj Flow Rate, veh/h	5	0	1	147	5	5	5	1652	95	98	2196	11
Adj No. of Lanes	0	1	0	1	1	0	1	2	0	1	2	0
Peak Hour Factor	0.92	0.92	0.92	0.92	0.92	0.92	0.92	0.92	0.92	0.92	0.92	0.92
Percent Heavy Veh, %	2	2	2	2	2	2	2	2	2	2	2	2
Cap, veh/h	194	5	30	234	107	107	11	2424	139	124	2802	14
Arrive On Green	0.13	0.00	0.12	0.13	0.13	0.12	0.01	0.95	0.94	0.07	0.78	0.77
Sat Flow, veh/h	1140	37	235	1410	856	856	1774	3403	195	1774	3611	18
Grp Volume(v), veh/h	6	0	0	147	0	10	5	854	893	98	1075	1132
Grp Sat Flow(s),veh/h/ln	1412	0	0	1410	0	1712	1774	1770	1828	1774	1770	1860
Q Serve(g_s), s	0.0	0.0	0.0	12.4	0.0	0.7	0.4	9.2	9.7	7.1	45.1	45.3
Cycle Q Clear(g_c), s	0.7	0.0	0.0	13.0	0.0	0.7	0.4	9.2	9.7	7.1	45.1	45.3
Prop In Lane	0.83		0.17	1.00		0.50	1.00		0.11	1.00		0.01
Lane Grp Cap(c), veh/h	228	0	0	234	0	215	11	1260	1302	124	1373	1443
V/C Ratio(X)	0.03	0.00	0.00	0.63	0.00	0.05	0.44	0.68	0.69	0.79	0.78	0.78
Avail Cap(c_a), veh/h	312	0	0	318	0	316	150	1260	1302	150	1373	1443
HCM Platoon Ratio	1.00	1.00	1.00	1.00	1.00	1.00	1.33	1.33	1.33	1.00	1.00	1.00
Upstream Filter(I)	1.00	0.00	0.00	1.00	0.00	1.00	0.75	0.75	0.75	1.00	1.00	1.00
Uniform Delay (d), s/veh	50.0	0.0	0.0	55.3	0.0	50.2	64.2	1.2	1.3	59.5	8.3	8.3
Incr Delay (d2), s/veh	0.0	0.0	0.0	2.8	0.0	0.1	7.5	2.2	2.2	16.7	4.5	4.3
Initial Q Delay(d3),s/veh	0.0	0.0	0.0	0.0	0.0	0.0	0.0	0.0	0.0	0.0	0.0	0.0
%ile BackOfQ(50%),veh/ln	0.2	0.0	0.0	5.3	0.0	0.3	0.2	4.5	5.0	4.1	23.2	24.7
LnGrp Delay(d),s/veh	50.0	0.0	0.0	58.1	0.0	50.3	71.7	3.5	3.5	76.2	12.8	12.7
LnGrp LOS	D			E		D	E	A	A	E	B	B
Approach Vol, veh/h		6			157			1752			2305	
Approach Delay, s/veh		50.0			57.6			3.7			15.5	
Approach LOS		D			E			A			B	

Timer	1	2	3	4	5	6	7	8
Assigned Phs	1	2		4	5	6		8
Phs Duration (G+Y+Rc), s	4.8	104.9		20.3	13.1	96.6		20.3
Change Period (Y+Rc), s	4.0	5.0		5.0	4.0	5.0		5.0
Max Green Setting (Gmax), s	11.0	82.0		23.0	11.0	82.0		23.0
Max Q Clear Time (g_c+I1), s	2.4	47.3		15.0	9.1	11.7		2.7
Green Ext Time (p_c), s	0.0	30.8		0.3	0.0	38.3		0.0

Intersection Summary	
HCM 2010 Ctrl Delay	12.2
HCM 2010 LOS	B

Movement	EBL	EBT	EBR	WBL	WBT	WBR	NBL	NBT	NBR	SBL	SBT	SBR
Lane Configurations												
Traffic Volume (veh/h)	135	5	15	65	5	15	15	1465	15	10	1795	260
Future Volume (veh/h)	135	5	15	65	5	15	15	1465	15	10	1795	260
Number	3	8	18	7	4	14	1	6	16	5	2	12
Initial Q (Qb), veh	0	0	0	0	0	0	0	0	0	0	0	0
Ped-Bike Adj(A_pbT)	1.00		1.00	1.00		1.00	1.00		1.00	1.00		1.00
Parking Bus, Adj	1.00	1.00	1.00	1.00	1.00	1.00	1.00	1.00	1.00	1.00	1.00	1.00
Adj Sat Flow, veh/h/ln	1900	1863	1900	1900	1863	1900	1863	1863	1900	1863	1863	1863
Adj Flow Rate, veh/h	147	5	13	71	5	9	16	1592	16	11	1951	217
Adj No. of Lanes	0	1	0	0	1	0	1	2	0	1	2	1
Peak Hour Factor	0.92	0.92	0.92	0.92	0.92	0.92	0.92	0.92	0.92	0.92	0.92	0.92
Percent Heavy Veh, %	2	2	2	2	2	2	2	2	2	2	2	2
Cap, veh/h	228	6	16	226	17	23	19	2759	28	13	2709	1211
Arrive On Green	0.13	0.13	0.12	0.13	0.13	0.12	0.01	0.77	0.76	0.01	0.77	0.77
Sat Flow, veh/h	1339	46	118	1336	132	174	1774	3590	36	1774	3539	1582
Grp Volume(v), veh/h	165	0	0	85	0	0	16	784	824	11	1951	217
Grp Sat Flow(s),veh/h/ln	1503	0	0	1642	0	0	1774	1770	1856	1774	1770	1582
Q Serve(g_s), s	7.8	0.0	0.0	0.0	0.0	0.0	1.2	23.9	24.0	0.8	37.4	4.8
Cycle Q Clear(g_c), s	13.7	0.0	0.0	5.9	0.0	0.0	1.2	23.9	24.0	0.8	37.4	4.8
Prop In Lane	0.89		0.08	0.84		0.11	1.00		0.02	1.00		1.00
Lane Grp Cap(c), veh/h	250	0	0	267	0	0	19	1360	1427	13	2709	1211
V/C Ratio(X)	0.66	0.00	0.00	0.32	0.00	0.00	0.84	0.58	0.58	0.82	0.72	0.18
Avail Cap(c_a), veh/h	347	0	0	365	0	0	109	1360	1427	109	2709	1211
HCM Platoon Ratio	1.00	1.00	1.00	1.00	1.00	1.00	1.00	1.00	1.00	1.00	1.00	1.00
Upstream Filter(I)	1.00	0.00	0.00	1.00	0.00	0.00	0.68	0.68	0.68	0.50	0.50	0.50
Uniform Delay (d), s/veh	54.8	0.0	0.0	51.7	0.0	0.0	64.2	6.2	6.3	64.4	8.0	4.1
Incr Delay (d2), s/veh	3.0	0.0	0.0	0.7	0.0	0.0	21.1	1.2	1.2	19.7	0.9	0.2
Initial Q Delay(d3),s/veh	0.0	0.0	0.0	0.0	0.0	0.0	0.0	0.0	0.0	0.0	0.0	0.0
%ile BackOfQ(50%),veh/ln	6.0	0.0	0.0	2.8	0.0	0.0	0.7	12.0	12.6	0.5	18.2	2.2
LnGrp Delay(d),s/veh	57.7	0.0	0.0	52.3	0.0	0.0	85.3	7.5	7.4	84.1	8.8	4.3
LnGrp LOS	E			D			F	A	A	F	A	A
Approach Vol, veh/h		165			85			1624			2179	
Approach Delay, s/veh		57.7			52.3			8.2			8.7	
Approach LOS		E			D			A			A	

Timer	1	2	3	4	5	6	7	8
Assigned Phs	1	2		4	5	6		8
Phs Duration (G+Y+Rc), s	5.4	103.5		21.1	5.0	103.9		21.1
Change Period (Y+Rc), s	4.0	5.0		5.0	4.0	5.0		5.0
Max Green Setting (Gmax), s	8.0	83.0		25.0	8.0	83.0		25.0
Max Q Clear Time (g_c+I1), s	3.2	39.4		7.9	2.8	26.0		15.7
Green Ext Time (p_c), s	0.0	39.2		0.2	0.0	38.4		0.4

Intersection Summary	
HCM 2010 Ctrl Delay	11.4
HCM 2010 LOS	B

Movement	EBL	EBT	EBR	WBL	WBT	WBR	NBL	NBT	NBR	SBL	SBT	SBR
Lane Configurations												
Traffic Volume (veh/h)	190	20	50	90	20	20	60	1495	60	15	1810	130
Future Volume (veh/h)	190	20	50	90	20	20	60	1495	60	15	1810	130
Number	3	8	18	7	4	14	1	6	16	5	2	12
Initial Q (Qb), veh	0	0	0	0	0	0	0	0	0	0	0	0
Ped-Bike Adj(A_pbT)	1.00		1.00	1.00		1.00	1.00		0.99	1.00		1.00
Parking Bus, Adj	1.00	1.00	1.00	1.00	1.00	1.00	1.00	1.00	1.00	1.00	1.00	1.00
Adj Sat Flow, veh/h/ln	1900	1863	1863	1863	1863	1900	1863	1863	1900	1863	1863	1900
Adj Flow Rate, veh/h	207	22	11	98	22	2	65	1625	63	16	1967	137
Adj No. of Lanes	0	1	1	1	1	0	1	2	0	1	2	0
Peak Hour Factor	0.92	0.92	0.92	0.92	0.92	0.92	0.92	0.92	0.92	0.92	0.92	0.92
Percent Heavy Veh, %	2	2	2	2	2	2	2	2	2	2	2	2
Cap, veh/h	286	25	305	373	326	30	83	2443	94	19	2242	154
Arrive On Green	0.19	0.19	0.19	0.19	0.19	0.19	0.05	0.70	0.70	0.02	1.00	1.00
Sat Flow, veh/h	1205	128	1576	1380	1682	153	1774	3474	134	1774	3360	231
Grp Volume(v), veh/h	229	0	11	98	0	24	65	825	863	16	1025	1079
Grp Sat Flow(s),veh/h/ln	1333	0	1576	1380	0	1835	1774	1770	1838	1774	1770	1822
Q Serve(g_s), s	20.6	0.0	0.7	0.0	0.0	1.4	4.7	33.7	34.2	1.2	0.0	0.0
Cycle Q Clear(g_c), s	22.0	0.0	0.7	6.5	0.0	1.4	4.7	33.7	34.2	1.2	0.0	0.0
Prop In Lane	0.90		1.00	1.00		0.08	1.00		0.07	1.00		0.13
Lane Grp Cap(c), veh/h	311	0	305	373	0	355	83	1245	1293	19	1181	1216
V/C Ratio(X)	0.74	0.00	0.04	0.26	0.00	0.07	0.78	0.66	0.67	0.84	0.87	0.89
Avail Cap(c_a), veh/h	331	0	327	393	0	381	109	1245	1293	109	1181	1216
HCM Platoon Ratio	1.00	1.00	1.00	1.00	1.00	1.00	1.00	1.00	1.00	2.00	2.00	2.00
Upstream Filter(I)	1.00	0.00	1.00	1.00	0.00	1.00	0.53	0.53	0.53	0.59	0.59	0.59
Uniform Delay (d), s/veh	51.8	0.0	42.6	44.9	0.0	42.9	61.3	10.7	10.8	63.5	0.0	0.0
Incr Delay (d2), s/veh	7.9	0.0	0.0	0.4	0.0	0.1	9.8	1.5	1.5	18.8	5.4	6.1
Initial Q Delay(d3),s/veh	0.0	0.0	0.0	0.0	0.0	0.0	0.0	0.0	0.0	0.0	0.0	0.0
%ile BackOfQ(50%),veh/ln	8.7	0.0	0.3	3.1	0.0	0.7	2.5	16.8	17.6	0.7	1.8	2.1
LnGrp Delay(d),s/veh	59.7	0.0	42.6	45.3	0.0	42.9	71.1	12.2	12.3	82.3	5.4	6.1
LnGrp LOS	E		D	D		D	E	B	B	F	A	A
Approach Vol, veh/h		240			122			1753			2120	
Approach Delay, s/veh		58.9			44.8			14.4			6.3	
Approach LOS		E			D			B			A	

Timer	1	2	3	4	5	6	7	8
Assigned Phs	1	2		4	5	6		8
Phs Duration (G+Y+Rc), s	10.1	90.8		29.2	5.4	95.4		29.2
Change Period (Y+Rc), s	4.0	5.0		5.0	4.0	5.0		5.0
Max Green Setting (Gmax), s	8.0	82.0		26.0	8.0	82.0		26.0
Max Q Clear Time (g_c+I1), s	6.7	2.0		8.5	3.2	36.2		24.0
Green Ext Time (p_c), s	0.0	58.2		0.4	0.0	28.3		0.2

Intersection Summary	
HCM 2010 Ctrl Delay	13.8
HCM 2010 LOS	B

Notes

Movement	EBL	EBT	EBR	WBL	WBT	WBR	NBL	NBT	NBR	SBL	SBT	SBR
Lane Configurations												
Traffic Volume (veh/h)	60	150	90	145	130	650	80	890	195	570	1140	100
Future Volume (veh/h)	60	150	90	145	130	650	80	890	195	570	1140	100
Number	7	4	14	3	8	18	1	6	16	5	2	12
Initial Q (Qb), veh	0	0	0	0	0	0	0	0	0	0	0	0
Ped-Bike Adj(A_pbT)	0.98		0.95	1.00		0.97	1.00		0.99	1.00		1.00
Parking Bus, Adj	1.00	1.00	1.00	1.00	1.00	1.00	1.00	1.00	1.00	1.00	1.00	1.00
Adj Sat Flow, veh/h/ln	1900	1863	1863	1863	1863	1863	1863	1863	1863	1863	1863	1900
Adj Flow Rate, veh/h	65	163	10	158	141	323	87	967	127	620	1239	105
Adj No. of Lanes	0	1	1	1	1	1	1	2	1	2	2	0
Peak Hour Factor	0.92	0.92	0.92	0.92	0.92	0.92	0.92	0.92	0.92	0.92	0.92	0.92
Percent Heavy Veh, %	2	2	2	2	2	2	2	2	2	2	2	2
Cap, veh/h	100	195	267	253	560	463	110	1428	630	700	1801	152
Arrive On Green	0.18	0.18	0.18	0.09	0.30	0.30	0.06	0.40	0.40	0.14	0.37	0.36
Sat Flow, veh/h	366	1107	1511	1774	1863	1541	1774	3539	1562	3442	3303	279
Grp Volume(v), veh/h	228	0	10	158	141	323	87	967	127	620	663	681
Grp Sat Flow(s),veh/h/ln	1473	0	1511	1774	1863	1541	1774	1770	1562	1721	1770	1813
Q Serve(g_s), s	17.2	0.0	0.7	9.1	7.4	24.1	6.3	29.1	6.9	23.0	41.2	41.5
Cycle Q Clear(g_c), s	19.5	0.0	0.7	9.1	7.4	24.1	6.3	29.1	6.9	23.0	41.2	41.5
Prop In Lane	0.29		1.00	1.00		1.00	1.00		1.00	1.00		0.15
Lane Grp Cap(c), veh/h	295	0	267	253	560	463	110	1428	630	700	965	988
V/C Ratio(X)	0.77	0.00	0.04	0.62	0.25	0.70	0.79	0.68	0.20	0.89	0.69	0.69
Avail Cap(c_a), veh/h	329	0	302	278	630	521	328	1428	630	953	965	988
HCM Platoon Ratio	1.00	1.00	1.00	1.00	1.00	1.00	1.00	1.00	1.00	0.67	0.67	0.67
Upstream Filter(I)	1.00	0.00	1.00	1.00	1.00	1.00	0.79	0.79	0.79	0.36	0.36	0.36
Uniform Delay (d), s/veh	51.8	0.0	44.4	38.5	34.4	40.2	60.2	31.8	25.2	54.6	31.9	32.0
Incr Delay (d2), s/veh	9.7	0.0	0.1	3.7	0.2	3.5	3.8	2.1	0.6	2.4	1.5	1.4
Initial Q Delay(d3),s/veh	0.0	0.0	0.0	0.0	0.0	0.0	0.0	0.0	0.0	0.0	0.0	0.0
%ile BackOfQ(50%),veh/ln	8.8	0.0	0.3	4.7	3.9	10.7	3.2	14.6	3.1	11.2	20.6	21.2
LnGrp Delay(d),s/veh	61.6	0.0	44.4	42.2	34.6	43.7	64.0	33.9	25.7	57.1	33.3	33.4
LnGrp LOS	E		D	D	C	D	E	C	C	E	C	C
Approach Vol, veh/h		238			622			1181			1964	
Approach Delay, s/veh		60.8			41.3			35.2			40.8	
Approach LOS		E			D			D			D	

Timer	1	2	3	4	5	6	7	8
Assigned Phs	1	2	3	4	5	6		8
Phs Duration (G+Y+Rc), s	12.0	74.9	16.1	26.9	30.5	56.5		43.1
Change Period (Y+Rc), s	4.0	5.0	5.0	5.0	4.0	5.0		5.0
Max Green Setting (Gmax), s	24.0	49.0	13.0	25.0	36.0	37.0		43.0
Max Q Clear Time (g_c+I1), s	8.3	43.5	11.1	21.5	25.0	31.1		26.1
Green Ext Time (p_c), s	0.1	4.4	0.1	0.3	1.4	4.0		2.0

Intersection Summary	
HCM 2010 Ctrl Delay	40.4
HCM 2010 LOS	D

Notes

APPENDIX C

LEVEL OF SERVICE CALCULATIONS

- Future Year 2022 Scenario 1 AM Peak

Movement	EBL	EBT	EBR	WBL	WBT	WBR	NBL	NBT	NBR	SBL	SBT	SBR
Lane Configurations												
Traffic Volume (veh/h)	50	45	295	90	50	20	225	235	105	10	135	30
Future Volume (veh/h)	50	45	295	90	50	20	225	235	105	10	135	30
Number	7	4	14	3	8	18	5	2	12	1	6	16
Initial Q (Qb), veh	0	0	0	0	0	0	0	0	0	0	0	0
Ped-Bike Adj(A_pbT)	0.99		0.99	0.99		0.99	1.00		1.00	1.00		1.00
Parking Bus, Adj	1.00	1.00	1.00	1.00	1.00	1.00	1.00	1.00	1.00	1.00	1.00	1.00
Adj Sat Flow, veh/h/ln	1900	1863	1863	1863	1863	1900	1863	1863	1863	1863	1863	1863
Adj Flow Rate, veh/h	54	49	42	98	54	11	245	255	53	11	147	8
Adj No. of Lanes	0	1	1	1	1	0	1	1	1	1	1	1
Peak Hour Factor	0.92	0.92	0.92	0.92	0.92	0.92	0.92	0.92	0.92	0.92	0.92	0.92
Percent Heavy Veh, %	2	2	2	2	2	2	2	2	2	2	2	2
Cap, veh/h	238	165	258	327	247	50	327	794	675	15	466	396
Arrive On Green	0.16	0.16	0.16	0.16	0.16	0.16	0.18	0.43	0.43	0.01	0.25	0.25
Sat Flow, veh/h	612	1000	1569	1291	1500	306	1774	1863	1583	1774	1863	1583
Grp Volume(v), veh/h	103	0	42	98	0	65	245	255	53	11	147	8
Grp Sat Flow(s),veh/h/ln	1612	0	1569	1291	0	1806	1774	1863	1583	1774	1863	1583
Q Serve(g_s), s	0.5	0.0	0.9	2.9	0.0	1.2	5.2	3.6	0.8	0.2	2.6	0.2
Cycle Q Clear(g_c), s	2.0	0.0	0.9	4.9	0.0	1.2	5.2	3.6	0.8	0.2	2.6	0.2
Prop In Lane	0.52		1.00	1.00		0.17	1.00		1.00	1.00		1.00
Lane Grp Cap(c), veh/h	403	0	258	327	0	297	327	794	675	15	466	396
V/C Ratio(X)	0.26	0.00	0.16	0.30	0.00	0.22	0.75	0.32	0.08	0.72	0.32	0.02
Avail Cap(c_a), veh/h	1071	0	943	890	0	1085	1332	3684	3131	666	2984	2537
HCM Platoon Ratio	1.00	1.00	1.00	1.00	1.00	1.00	1.00	1.00	1.00	1.00	1.00	1.00
Upstream Filter(I)	1.00	0.00	1.00	1.00	0.00	1.00	1.00	1.00	1.00	1.00	1.00	1.00
Uniform Delay (d), s/veh	14.8	0.0	14.3	17.0	0.0	14.5	15.4	7.6	6.8	19.8	12.2	11.3
Incr Delay (d2), s/veh	0.3	0.0	0.3	0.5	0.0	0.4	3.4	0.5	0.1	47.2	0.8	0.0
Initial Q Delay(d3),s/veh	0.0	0.0	0.0	0.0	0.0	0.0	0.0	0.0	0.0	0.0	0.0	0.0
%ile BackOfQ(50%),veh/ln	1.0	0.0	0.4	1.1	0.0	0.6	2.8	2.0	0.4	0.3	1.4	0.1
LnGrp Delay(d),s/veh	15.1	0.0	14.6	17.5	0.0	14.8	18.8	8.1	6.9	67.0	13.0	11.3
LnGrp LOS	B		B	B		B	B	A	A	E	B	B
Approach Vol, veh/h		145			163			553			166	
Approach Delay, s/veh		15.0			16.4			12.7			16.5	
Approach LOS		B			B			B			B	

Timer	1	2	3	4	5	6	7	8
Assigned Phs	1	2		4	5	6		8
Phs Duration (G+Y+Rc), s	5.3	23.0		11.6	12.4	16.0		11.6
Change Period (Y+Rc), s	5.0	6.0		5.0	5.0	6.0		5.0
Max Green Setting (Gmax), s	15.0	79.0		24.0	30.0	64.0		24.0
Max Q Clear Time (g_c+I1), s	2.2	5.6		4.0	7.2	4.6		6.9
Green Ext Time (p_c), s	0.0	3.8		0.6	0.7	1.8		0.6

Intersection Summary	
HCM 2010 Ctrl Delay	14.3
HCM 2010 LOS	B

Movement	EBL	EBT	EBR	WBL	WBT	WBR	NBL	NBT	NBR	SBL	SBT	SBR
Lane Configurations												
Traffic Volume (veh/h)	60	5	180	90	20	15	140	535	15	10	515	65
Future Volume (veh/h)	60	5	180	90	20	15	140	535	15	10	515	65
Number	7	4	14	3	8	18	5	2	12	1	6	16
Initial Q (Qb), veh	0	0	0	0	0	0	0	0	0	0	0	0
Ped-Bike Adj(A_pbT)	0.98		0.97	0.98		0.97	1.00		1.00	1.00		0.99
Parking Bus, Adj	1.00	1.00	1.00	1.00	1.00	1.00	1.00	1.00	1.00	1.00	1.00	1.00
Adj Sat Flow, veh/h/ln	1900	1863	1863	1863	1863	1900	1863	1863	1863	1863	1863	1863
Adj Flow Rate, veh/h	65	5	20	98	22	2	152	582	0	11	560	28
Adj No. of Lanes	0	1	1	1	1	0	1	1	1	1	1	1
Peak Hour Factor	0.92	0.92	0.92	0.92	0.92	0.92	0.92	0.92	0.92	0.92	0.92	0.92
Percent Heavy Veh, %	2	2	2	2	2	2	2	2	2	2	2	2
Cap, veh/h	380	24	308	346	335	30	411	880	748	351	725	611
Arrive On Green	0.20	0.20	0.20	0.20	0.20	0.20	0.09	0.47	0.00	0.01	0.39	0.39
Sat Flow, veh/h	1209	122	1544	1351	1679	153	1774	1863	1583	1774	1863	1571
Grp Volume(v), veh/h	70	0	20	98	0	24	152	582	0	11	560	28
Grp Sat Flow(s),veh/h/ln	1331	0	1544	1351	0	1831	1774	1863	1583	1774	1863	1571
Q Serve(g_s), s	2.0	0.0	0.5	3.3	0.0	0.5	2.3	12.0	0.0	0.2	13.2	0.6
Cycle Q Clear(g_c), s	2.5	0.0	0.5	5.8	0.0	0.5	2.3	12.0	0.0	0.2	13.2	0.6
Prop In Lane	0.93		1.00	1.00		0.08	1.00		1.00	1.00		1.00
Lane Grp Cap(c), veh/h	405	0	308	346	0	366	411	880	748	351	725	611
V/C Ratio(X)	0.17	0.00	0.06	0.28	0.00	0.07	0.37	0.66	0.00	0.03	0.77	0.05
Avail Cap(c_a), veh/h	817	0	771	751	0	914	779	1897	1612	867	1897	1600
HCM Platoon Ratio	1.00	1.00	1.00	1.00	1.00	1.00	1.00	1.00	1.00	1.00	1.00	1.00
Upstream Filter(I)	1.00	0.00	1.00	1.00	0.00	1.00	1.00	1.00	0.00	1.00	1.00	1.00
Uniform Delay (d), s/veh	17.1	0.0	16.2	19.5	0.0	16.2	9.2	10.1	0.0	9.8	13.4	9.5
Incr Delay (d2), s/veh	0.2	0.0	0.1	0.4	0.0	0.1	0.6	0.9	0.0	0.0	1.8	0.0
Initial Q Delay(d3),s/veh	0.0	0.0	0.0	0.0	0.0	0.0	0.0	0.0	0.0	0.0	0.0	0.0
%ile BackOfQ(50%),veh/ln	0.8	0.0	0.2	1.3	0.0	0.3	1.2	6.4	0.0	0.1	7.0	0.2
LnGrp Delay(d),s/veh	17.3	0.0	16.3	20.0	0.0	16.3	9.8	11.0	0.0	9.8	15.2	9.5
LnGrp LOS	B		B	B		B	A	B		A	B	A
Approach Vol, veh/h		90			122			734			599	
Approach Delay, s/veh		17.1			19.2			10.8			14.8	
Approach LOS		B			B			B			B	

Timer	1	2	3	4	5	6	7	8
Assigned Phs	1	2		4	5	6		8
Phs Duration (G+Y+Rc), s	5.4	29.7		15.0	9.6	25.5		15.0
Change Period (Y+Rc), s	5.0	6.0		5.0	5.0	6.0		5.0
Max Green Setting (Gmax), s	15.0	51.0		25.0	15.0	51.0		25.0
Max Q Clear Time (g_c+I1), s	2.2	14.0		4.5	4.3	15.2		7.8
Green Ext Time (p_c), s	0.0	4.2		0.4	0.3	4.1		0.3

Intersection Summary	
HCM 2010 Ctrl Delay	13.4
HCM 2010 LOS	B

Notes

Movement	EBL	EBT	EBR	WBL	WBT	WBR	NBL	NBT	NBR	SBL	SBT	SBR
Lane Configurations												
Traffic Volume (veh/h)	40	5	125	40	15	30	60	600	25	15	715	30
Future Volume (veh/h)	40	5	125	40	15	30	60	600	25	15	715	30
Number	7	4	14	3	8	18	5	2	12	1	6	16
Initial Q (Qb), veh	0	0	0	0	0	0	0	0	0	0	0	0
Ped-Bike Adj(A_pbT)	1.00		0.99	1.00		0.99	1.00		1.00	1.00		1.00
Parking Bus, Adj	1.00	1.00	1.00	1.00	1.00	1.00	1.00	1.00	1.00	1.00	1.00	1.00
Adj Sat Flow, veh/h/ln	1863	1863	1900	1863	1863	1863	1863	1863	1863	1863	1863	1863
Adj Flow Rate, veh/h	43	5	7	43	16	1	65	652	15	16	777	17
Adj No. of Lanes	1	1	0	1	1	1	1	1	1	1	1	1
Peak Hour Factor	0.92	0.92	0.92	0.92	0.92	0.92	0.92	0.92	0.92	0.92	0.92	0.92
Percent Heavy Veh, %	2	2	2	2	2	2	2	2	2	2	2	2
Cap, veh/h	59	86	121	59	231	194	84	985	837	20	918	780
Arrive On Green	0.03	0.12	0.12	0.03	0.12	0.12	0.05	0.53	0.53	0.01	0.49	0.49
Sat Flow, veh/h	1774	698	977	1774	1863	1571	1774	1863	1583	1774	1863	1583
Grp Volume(v), veh/h	43	0	12	43	16	1	65	652	15	16	777	17
Grp Sat Flow(s),veh/h/ln	1774	0	1675	1774	1863	1571	1774	1863	1583	1774	1863	1583
Q Serve(g_s), s	1.6	0.0	0.4	1.6	0.5	0.0	2.4	16.8	0.3	0.6	24.0	0.4
Cycle Q Clear(g_c), s	1.6	0.0	0.4	1.6	0.5	0.0	2.4	16.8	0.3	0.6	24.0	0.4
Prop In Lane	1.00		0.58	1.00		1.00	1.00		1.00	1.00		1.00
Lane Grp Cap(c), veh/h	59	0	207	59	231	194	84	985	837	20	918	780
V/C Ratio(X)	0.73	0.00	0.06	0.73	0.07	0.01	0.77	0.66	0.02	0.78	0.85	0.02
Avail Cap(c_a), veh/h	537	0	533	537	593	500	672	1834	1559	672	1834	1559
HCM Platoon Ratio	1.00	1.00	1.00	1.00	1.00	1.00	1.00	1.00	1.00	1.00	1.00	1.00
Upstream Filter(I)	1.00	0.00	1.00	1.00	1.00	1.00	1.00	1.00	1.00	1.00	1.00	1.00
Uniform Delay (d), s/veh	31.6	0.0	25.5	31.6	25.6	25.4	31.1	11.3	7.4	32.5	14.6	8.6
Incr Delay (d2), s/veh	16.1	0.0	0.1	16.1	0.1	0.0	13.6	0.8	0.0	46.0	2.3	0.0
Initial Q Delay(d3),s/veh	0.0	0.0	0.0	0.0	0.0	0.0	0.0	0.0	0.0	0.0	0.0	0.0
%ile BackOfQ(50%),veh/ln	1.0	0.0	0.2	1.0	0.3	0.0	1.5	8.7	0.1	0.6	12.7	0.2
LnGrp Delay(d),s/veh	47.7	0.0	25.6	47.7	25.7	25.4	44.7	12.1	7.4	78.6	16.8	8.6
LnGrp LOS	D		C	D	C	C	D	B	A	E	B	A
Approach Vol, veh/h		55			60			732			810	
Approach Delay, s/veh		42.9			41.5			14.9			17.9	
Approach LOS		D			D			B			B	

Timer	1	2	3	4	5	6	7	8
Assigned Phs	1	2	3	4	5	6	7	8
Phs Duration (G+Y+Rc), s	5.8	39.9	7.2	13.2	8.1	37.5	7.2	13.2
Change Period (Y+Rc), s	5.0	5.0	5.0	5.0	5.0	5.0	5.0	5.0
Max Green Setting (Gmax), s	25.0	65.0	20.0	21.0	25.0	65.0	20.0	21.0
Max Q Clear Time (g_c+I1), s	2.6	18.8	3.6	2.4	4.4	26.0	3.6	2.5
Green Ext Time (p_c), s	0.0	5.1	0.1	0.0	0.1	6.6	0.1	0.0

Intersection Summary	
HCM 2010 Ctrl Delay	18.2
HCM 2010 LOS	B

Movement	EBL	EBT	EBR	WBL	WBT	WBR	NBL	NBT	NBR	SBL	SBT	SBR
Lane Configurations												
Traffic Volume (veh/h)	35	10	480	20	5	0	315	685	45	10	835	10
Future Volume (veh/h)	35	10	480	20	5	0	315	685	45	10	835	10
Number	3	8	18	7	4	14	1	6	16	5	2	12
Initial Q (Qb), veh	0	0	0	0	0	0	0	0	0	0	0	0
Ped-Bike Adj(A_pbT)	0.99		1.00	0.99		1.00	1.00		1.00	1.00		1.00
Parking Bus, Adj	1.00	1.00	1.00	1.00	1.00	1.00	1.00	1.00	1.00	1.00	1.00	1.00
Adj Sat Flow, veh/h/ln	1900	1863	1863	1900	1863	1900	1863	1863	1900	1863	1863	1863
Adj Flow Rate, veh/h	38	11	0	22	5	0	342	745	48	11	908	4
Adj No. of Lanes	0	1	1	0	1	0	1	2	0	1	2	1
Peak Hour Factor	0.92	0.92	0.92	0.92	0.92	0.92	0.92	0.92	0.92	0.92	0.92	0.92
Percent Heavy Veh, %	2	2	2	2	2	2	2	2	2	2	2	2
Cap, veh/h	193	31	116	198	31	0	410	2217	143	15	1537	687
Arrive On Green	0.09	0.07	0.00	0.09	0.07	0.00	0.23	0.66	0.66	0.01	0.43	0.43
Sat Flow, veh/h	1112	418	1583	1145	421	0	1774	3377	217	1774	3539	1583
Grp Volume(v), veh/h	49	0	0	27	0	0	342	390	403	11	908	4
Grp Sat Flow(s),veh/h/ln	1530	0	1583	1566	0	0	1774	1770	1824	1774	1770	1583
Q Serve(g_s), s	0.8	0.0	0.0	0.0	0.0	0.0	10.5	5.6	5.6	0.4	11.2	0.1
Cycle Q Clear(g_c), s	1.6	0.0	0.0	0.8	0.0	0.0	10.5	5.6	5.6	0.4	11.2	0.1
Prop In Lane	0.78		1.00	0.81		0.00	1.00		0.12	1.00		1.00
Lane Grp Cap(c), veh/h	250	0	116	256	0	0	410	1162	1198	15	1537	687
V/C Ratio(X)	0.20	0.00	0.00	0.11	0.00	0.00	0.83	0.34	0.34	0.74	0.59	0.01
Avail Cap(c_a), veh/h	916	0	829	836	0	0	2197	1760	1814	2197	3519	1574
HCM Platoon Ratio	1.00	1.00	1.00	1.00	1.00	1.00	1.00	1.00	1.00	1.00	1.00	1.00
Upstream Filter(I)	1.00	0.00	0.00	1.00	0.00	0.00	1.00	1.00	1.00	1.00	1.00	1.00
Uniform Delay (d), s/veh	25.0	0.0	0.0	24.6	0.0	0.0	21.0	4.3	4.3	28.4	12.3	9.2
Incr Delay (d2), s/veh	0.4	0.0	0.0	0.2	0.0	0.0	1.7	0.4	0.4	22.8	0.8	0.0
Initial Q Delay(d3),s/veh	0.0	0.0	0.0	0.0	0.0	0.0	0.0	0.0	0.0	0.0	0.0	0.0
%ile BackOfQ(50%),veh/ln	0.7	0.0	0.0	0.4	0.0	0.0	5.3	2.7	2.8	0.3	5.6	0.0
LnGrp Delay(d),s/veh	25.3	0.0	0.0	24.8	0.0	0.0	22.7	4.7	4.7	51.1	13.1	9.2
LnGrp LOS	C			C			C	A	A	D	B	A
Approach Vol, veh/h		49			27			1135			923	
Approach Delay, s/veh		25.3			24.8			10.1			13.6	
Approach LOS		C			C			B			B	

Timer	1	2	3	4	5	6	7	8
Assigned Phs	1	2		4	5	6		8
Phs Duration (G+Y+Rc), s	17.2	30.9		9.2	4.5	43.6		9.2
Change Period (Y+Rc), s	4.0	6.0		5.0	4.0	6.0		5.0
Max Green Setting (Gmax), s	71.0	57.0		27.0	71.0	57.0		30.0
Max Q Clear Time (g_c+I1), s	12.5	13.2		2.8	2.4	7.6		3.6
Green Ext Time (p_c), s	0.8	11.7		0.1	0.0	9.0		0.1

Intersection Summary	
HCM 2010 Ctrl Delay	12.1
HCM 2010 LOS	B

Movement	EBL	EBT	EBR	WBL	WBT	WBR	NBL	NBT	NBR	SBL	SBT	SBR
Lane Configurations												
Traffic Volume (veh/h)	30	0	70	10	5	10	135	1095	20	15	1305	70
Future Volume (veh/h)	30	0	70	10	5	10	135	1095	20	15	1305	70
Number	3	8	18	7	4	14	1	6	16	5	2	12
Initial Q (Qb), veh	0	0	0	0	0	0	0	0	0	0	0	0
Ped-Bike Adj(A_pbT)	1.00		1.00	1.00		1.00	1.00		1.00	1.00		1.00
Parking Bus, Adj	1.00	1.00	1.00	1.00	1.00	1.00	1.00	1.00	1.00	1.00	1.00	1.00
Adj Sat Flow, veh/h/ln	1900	1863	1863	1900	1863	1900	1863	1863	1900	1863	1863	1863
Adj Flow Rate, veh/h	33	0	1	11	5	1	147	1190	21	16	1418	47
Adj No. of Lanes	0	1	1	0	1	0	1	2	0	1	2	1
Peak Hour Factor	0.92	0.92	0.92	0.92	0.92	0.92	0.92	0.92	0.92	0.92	0.92	0.92
Percent Heavy Veh, %	2	2	2	2	2	2	2	2	2	2	2	2
Cap, veh/h	176	0	72	118	19	3	186	2628	46	20	2284	1022
Arrive On Green	0.06	0.00	0.05	0.06	0.05	0.05	0.10	0.74	0.74	0.01	0.65	0.65
Sat Flow, veh/h	1553	0	1583	696	422	70	1774	3558	63	1774	3539	1583
Grp Volume(v), veh/h	33	0	1	17	0	0	147	592	619	16	1418	47
Grp Sat Flow(s),veh/h/ln	1553	0	1583	1188	0	0	1774	1770	1852	1774	1770	1583
Q Serve(g_s), s	0.0	0.0	0.0	0.4	0.0	0.0	5.5	9.0	9.0	0.6	16.2	0.7
Cycle Q Clear(g_c), s	1.2	0.0	0.0	1.7	0.0	0.0	5.5	9.0	9.0	0.6	16.2	0.7
Prop In Lane	1.00		1.00	0.65		0.06	1.00		0.03	1.00		1.00
Lane Grp Cap(c), veh/h	198	0	72	158	0	0	186	1307	1367	20	2284	1022
V/C Ratio(X)	0.17	0.00	0.01	0.11	0.00	0.00	0.79	0.45	0.45	0.78	0.62	0.05
Avail Cap(c_a), veh/h	607	0	532	603	0	0	545	2224	2328	285	3932	1759
HCM Platoon Ratio	1.00	1.00	1.00	1.00	1.00	1.00	1.00	1.00	1.00	1.00	1.00	1.00
Upstream Filter(I)	1.00	0.00	1.00	1.00	0.00	0.00	1.00	1.00	1.00	1.00	1.00	1.00
Uniform Delay (d), s/veh	31.3	0.0	31.2	31.7	0.0	0.0	29.9	3.5	3.5	33.7	7.2	4.4
Incr Delay (d2), s/veh	0.1	0.0	0.0	0.1	0.0	0.0	2.9	0.5	0.5	21.1	0.6	0.0
Initial Q Delay(d3),s/veh	0.0	0.0	0.0	0.0	0.0	0.0	0.0	0.0	0.0	0.0	0.0	0.0
%ile BackOfQ(50%),veh/ln	0.6	0.0	0.0	0.3	0.0	0.0	2.8	4.5	4.7	0.4	7.9	0.3
LnGrp Delay(d),s/veh	31.4	0.0	31.2	31.8	0.0	0.0	32.8	4.0	4.0	54.8	7.8	4.5
LnGrp LOS	C		C	C			C	A	A	D	A	A
Approach Vol, veh/h		34			17			1358			1481	
Approach Delay, s/veh		31.4			31.8			7.1			8.2	
Approach LOS		C			C			A			A	

Timer	1	2	3	4	5	6	7	8
Assigned Phs	1	2		4	5	6		8
Phs Duration (G+Y+Rc), s	11.2	49.2		8.1	4.8	55.5		8.1
Change Period (Y+Rc), s	4.0	5.0		5.0	4.0	5.0		5.0
Max Green Setting (Gmax), s	21.0	76.0		23.0	11.0	86.0		23.0
Max Q Clear Time (g_c+I1), s	7.5	18.2		3.7	2.6	11.0		3.2
Green Ext Time (p_c), s	0.1	25.9		0.0	0.0	18.6		0.0

Intersection Summary	
HCM 2010 Ctrl Delay	8.1
HCM 2010 LOS	A

Movement	EBL	EBT	EBR	WBL	WBT	WBR	NBL	NBT	NBR	SBL	SBT	SBR
Lane Configurations												
Traffic Volume (veh/h)	55	5	35	40	15	45	110	1235	60	30	1250	45
Future Volume (veh/h)	55	5	35	40	15	45	110	1235	60	30	1250	45
Number	3	8	18	7	4	14	1	6	16	5	2	12
Initial Q (Qb), veh	0	0	0	0	0	0	0	0	0	0	0	0
Ped-Bike Adj(A_pbT)	1.00		1.00	1.00		1.00	1.00		1.00	1.00		1.00
Parking Bus, Adj	1.00	1.00	1.00	1.00	1.00	1.00	1.00	1.00	1.00	1.00	1.00	1.00
Adj Sat Flow, veh/h/ln	1900	1863	1863	1863	1863	1900	1863	1863	1863	1863	1863	1863
Adj Flow Rate, veh/h	60	5	1	43	16	1	120	1342	50	33	1359	35
Adj No. of Lanes	0	1	1	1	1	0	1	2	1	1	2	1
Peak Hour Factor	0.92	0.92	0.92	0.92	0.92	0.92	0.92	0.92	0.92	0.92	0.92	0.92
Percent Heavy Veh, %	2	2	2	2	2	2	2	2	2	2	2	2
Cap, veh/h	160	12	153	111	168	10	142	2768	1238	43	2571	1150
Arrive On Green	0.10	0.10	0.10	0.10	0.10	0.10	0.08	0.78	0.78	0.02	0.73	0.73
Sat Flow, veh/h	1193	120	1578	1401	1735	108	1774	3539	1583	1774	3539	1583
Grp Volume(v), veh/h	65	0	1	43	0	17	120	1342	50	33	1359	35
Grp Sat Flow(s),veh/h/ln	1313	0	1578	1401	0	1843	1774	1770	1583	1774	1770	1583
Q Serve(g_s), s	6.6	0.0	0.1	4.7	0.0	1.3	10.3	20.6	1.1	2.9	26.4	1.0
Cycle Q Clear(g_c), s	7.9	0.0	0.1	12.5	0.0	1.3	10.3	20.6	1.1	2.9	26.4	1.0
Prop In Lane	0.92		1.00	1.00		0.06	1.00		1.00	1.00		1.00
Lane Grp Cap(c), veh/h	172	0	153	111	0	178	142	2768	1238	43	2571	1150
V/C Ratio(X)	0.38	0.00	0.01	0.39	0.00	0.10	0.85	0.48	0.04	0.76	0.53	0.03
Avail Cap(c_a), veh/h	254	0	244	192	0	285	240	2768	1238	240	2571	1150
HCM Platoon Ratio	1.00	1.00	1.00	1.00	1.00	1.00	1.00	1.00	1.00	1.00	1.00	1.00
Upstream Filter(I)	1.00	0.00	1.00	1.00	0.00	1.00	0.73	0.73	0.73	1.00	1.00	1.00
Uniform Delay (d), s/veh	67.3	0.0	63.3	72.8	0.0	63.8	70.4	5.9	3.8	75.2	9.4	5.9
Incr Delay (d2), s/veh	1.4	0.0	0.0	2.2	0.0	0.2	3.9	0.4	0.0	9.7	0.8	0.0
Initial Q Delay(d3),s/veh	0.0	0.0	0.0	0.0	0.0	0.0	0.0	0.0	0.0	0.0	0.0	0.0
%ile BackOfQ(50%),veh/ln	2.7	0.0	0.0	1.9	0.0	0.7	5.2	10.1	0.5	1.5	13.1	0.4
LnGrp Delay(d),s/veh	68.7	0.0	63.3	75.0	0.0	64.1	74.2	6.4	3.8	84.8	10.2	6.0
LnGrp LOS	E		E	E		E	E	A	A	F	B	A
Approach Vol, veh/h		66			60			1512			1427	
Approach Delay, s/veh		68.6			71.9			11.7			11.8	
Approach LOS		E			E			B			B	

Timer	1	2	3	4	5	6	7	8
Assigned Phs	1	2		4	5	6		8
Phs Duration (G+Y+Rc), s	16.4	118.6		20.0	7.8	127.2		20.0
Change Period (Y+Rc), s	4.0	6.0		5.0	4.0	6.0		5.0
Max Green Setting (Gmax), s	21.0	95.0		24.0	21.0	95.0		24.0
Max Q Clear Time (g_c+I1), s	12.3	28.4		14.5	4.9	22.6		9.9
Green Ext Time (p_c), s	0.1	25.1		0.1	0.0	25.5		0.1

Intersection Summary	
HCM 2010 Ctrl Delay	14.1
HCM 2010 LOS	B

Movement	EBL	EBT	EBR	WBL	WBT	WBR	NBL	NBT	NBR	SBL	SBT	SBR
Lane Configurations												
Traffic Volume (veh/h)	135	10	220	10	10	10	425	1315	15	80	1210	100
Future Volume (veh/h)	135	10	220	10	10	10	425	1315	15	80	1210	100
Number	3	8	18	7	4	14	1	6	16	5	2	12
Initial Q (Qb), veh	0	0	0	0	0	0	0	0	0	0	0	0
Ped-Bike Adj(A_pbT)	1.00		0.97	1.00		0.98	1.00		1.00	1.00		1.00
Parking Bus, Adj	1.00	1.00	1.00	1.00	1.00	1.00	1.00	1.00	1.00	1.00	1.00	1.00
Adj Sat Flow, veh/h/ln	1863	1863	1863	1900	1863	1900	1863	1863	1900	1863	1863	1863
Adj Flow Rate, veh/h	155	0	60	11	11	3	462	1429	16	87	1315	80
Adj No. of Lanes	2	0	2	0	1	0	2	2	0	1	2	1
Peak Hour Factor	0.92	0.92	0.92	0.92	0.92	0.92	0.92	0.92	0.92	0.92	0.92	0.92
Percent Heavy Veh, %	2	2	2	2	2	2	2	2	2	2	2	2
Cap, veh/h	336	0	825	62	62	17	612	2106	24	152	1754	916
Arrive On Green	0.09	0.00	0.09	0.08	0.08	0.05	0.18	0.59	0.57	0.09	0.50	0.50
Sat Flow, veh/h	3548	0	3074	783	783	214	3442	3585	40	1774	3539	1578
Grp Volume(v), veh/h	155	0	60	25	0	0	462	705	740	87	1315	80
Grp Sat Flow(s),veh/h/ln	1774	0	1537	1780	0	0	1721	1770	1856	1774	1770	1578
Q Serve(g_s), s	4.3	0.0	1.5	1.4	0.0	0.0	13.4	28.7	28.8	5.0	31.3	2.4
Cycle Q Clear(g_c), s	4.3	0.0	1.5	1.4	0.0	0.0	13.4	28.7	28.8	5.0	31.3	2.4
Prop In Lane	1.00		1.00	0.44		0.12	1.00		0.02	1.00		1.00
Lane Grp Cap(c), veh/h	336	0	825	142	0	0	612	1040	1090	152	1754	916
V/C Ratio(X)	0.46	0.00	0.07	0.18	0.00	0.00	0.75	0.68	0.68	0.57	0.75	0.09
Avail Cap(c_a), veh/h	1148	0	1529	525	0	0	1900	3268	3427	253	5088	2403
HCM Platoon Ratio	1.00	1.00	1.00	1.00	1.00	1.00	1.00	1.00	1.00	1.00	1.00	1.00
Upstream Filter(I)	1.00	0.00	1.00	1.00	0.00	0.00	1.00	1.00	1.00	1.00	1.00	1.00
Uniform Delay (d), s/veh	45.0	0.0	29.1	45.3	0.0	0.0	41.0	14.9	14.9	46.2	21.3	9.7
Incr Delay (d2), s/veh	0.4	0.0	0.0	0.6	0.0	0.0	0.7	1.1	1.1	1.3	0.9	0.1
Initial Q Delay(d3),s/veh	0.0	0.0	0.0	0.0	0.0	0.0	0.0	0.0	0.0	0.0	0.0	0.0
%ile BackOfQ(50%),veh/ln	2.1	0.0	0.7	0.7	0.0	0.0	6.4	14.2	14.9	2.5	15.4	1.2
LnGrp Delay(d),s/veh	45.4	0.0	29.1	45.9	0.0	0.0	41.7	16.0	15.9	47.4	22.2	9.8
LnGrp LOS	D		C	D			D	B	B	D	C	A
Approach Vol, veh/h		215			25			1907			1482	
Approach Delay, s/veh		40.8			45.9			22.2			23.0	
Approach LOS		D			D			C			C	

Timer	1	2	3	4	5	6	7	8
Assigned Phs	1	2		4	5	6		8
Phs Duration (G+Y+Rc), s	22.7	56.0		12.4	13.0	65.7		13.9
Change Period (Y+Rc), s	6.0	6.0		7.0	6.0	6.0		7.0
Max Green Setting (Gmax), s	56.0	149.0		28.0	13.0	192.0		31.0
Max Q Clear Time (g_c+I1), s	15.4	33.3		3.4	7.0	30.8		6.3
Green Ext Time (p_c), s	1.3	16.7		0.0	0.1	16.6		0.6

Intersection Summary	
HCM 2010 Ctrl Delay	23.8
HCM 2010 LOS	C

Notes

Movement	EBL	EBT	EBR	WBL	WBT	WBR	NBL	NBT	NBR	SBL	SBT	SBR
Lane Configurations												
Traffic Volume (veh/h)	5	5	5	60	0	45	5	1755	90	30	1410	5
Future Volume (veh/h)	5	5	5	60	0	45	5	1755	90	30	1410	5
Number	3	8	18	7	4	14	1	6	16	5	2	12
Initial Q (Qb), veh	0	0	0	0	0	0	0	0	0	0	0	0
Ped-Bike Adj(A_pbT)	0.98		0.97	0.98		0.97	1.00		1.00	1.00		1.00
Parking Bus, Adj	1.00	1.00	1.00	1.00	1.00	1.00	1.00	1.00	1.00	1.00	1.00	1.00
Adj Sat Flow, veh/h/ln	1900	1863	1900	1863	1863	1900	1863	1863	1900	1863	1863	1900
Adj Flow Rate, veh/h	5	5	1	65	0	1	5	1908	96	33	1533	5
Adj No. of Lanes	0	1	0	1	1	0	1	2	0	1	2	0
Peak Hour Factor	0.92	0.92	0.92	0.92	0.92	0.92	0.92	0.92	0.92	0.92	0.92	0.92
Percent Heavy Veh, %	2	2	2	2	2	2	2	2	2	2	2	2
Cap, veh/h	90	80	13	176	0	138	11	2707	135	63	2962	10
Arrive On Green	0.09	0.09	0.08	0.09	0.00	0.08	0.01	0.79	0.78	0.04	0.82	0.81
Sat Flow, veh/h	584	895	148	1372	0	1543	1774	3431	171	1774	3618	12
Grp Volume(v), veh/h	11	0	0	65	0	1	5	976	1028	33	750	788
Grp Sat Flow(s),veh/h/ln	1627	0	0	1372	0	1543	1774	1770	1832	1774	1770	1861
Q Serve(g_s), s	0.0	0.0	0.0	5.4	0.0	0.1	0.4	36.3	37.8	2.6	18.7	18.7
Cycle Q Clear(g_c), s	0.8	0.0	0.0	6.1	0.0	0.1	0.4	36.3	37.8	2.6	18.7	18.7
Prop In Lane	0.45		0.09	1.00		1.00	1.00		0.09	1.00		0.01
Lane Grp Cap(c), veh/h	183	0	0	176	0	138	11	1396	1446	63	1448	1523
V/C Ratio(X)	0.06	0.00	0.00	0.37	0.00	0.01	0.45	0.70	0.71	0.52	0.52	0.52
Avail Cap(c_a), veh/h	312	0	0	289	0	265	101	1396	1446	101	1448	1523
HCM Platoon Ratio	1.00	1.00	1.00	1.00	1.00	1.00	1.00	1.00	1.00	1.00	1.00	1.00
Upstream Filter(I)	1.00	0.00	0.00	1.00	0.00	1.00	0.63	0.63	0.63	1.00	1.00	1.00
Uniform Delay (d), s/veh	58.4	0.0	0.0	60.7	0.0	58.5	69.3	6.9	7.1	66.3	4.0	4.0
Incr Delay (d2), s/veh	0.1	0.0	0.0	1.3	0.0	0.0	6.4	1.9	1.9	2.5	1.3	1.3
Initial Q Delay(d3),s/veh	0.0	0.0	0.0	0.0	0.0	0.0	0.0	0.0	0.0	0.0	0.0	0.0
%ile BackOfQ(50%),veh/ln	0.4	0.0	0.0	2.5	0.0	0.0	0.2	18.1	19.6	1.3	9.5	10.0
LnGrp Delay(d),s/veh	58.6	0.0	0.0	62.0	0.0	58.6	75.8	8.8	9.0	68.8	5.3	5.3
LnGrp LOS	E			E		E	E	A	A	E	A	A
Approach Vol, veh/h		11			66			2009			1571	
Approach Delay, s/veh		58.6			62.0			9.1			6.6	
Approach LOS		E			E			A			A	

Timer	1	2	3	4	5	6	7	8
Assigned Phs	1	2		4	5	6		8
Phs Duration (G+Y+Rc), s	4.9	118.6		16.5	9.0	114.5		16.5
Change Period (Y+Rc), s	4.0	5.0		5.0	4.0	5.0		5.0
Max Green Setting (Gmax), s	8.0	95.0		23.0	8.0	95.0		23.0
Max Q Clear Time (g_c+I1), s	2.8	20.7		8.1	4.6	39.8		2.8
Green Ext Time (p_c), s	0.0	30.1		0.1	0.0	41.2		0.0

Intersection Summary	
HCM 2010 Ctrl Delay	9.1
HCM 2010 LOS	A

Movement	EBL	EBT	EBR	WBL	WBT	WBR	NBL	NBT	NBR	SBL	SBT	SBR
Lane Configurations												
Traffic Volume (veh/h)	90	5	5	105	15	15	5	1735	20	10	1250	190
Future Volume (veh/h)	90	5	5	105	15	15	5	1735	20	10	1250	190
Number	3	8	18	7	4	14	1	6	16	5	2	12
Initial Q (Qb), veh	0	0	0	0	0	0	0	0	0	0	0	0
Ped-Bike Adj(A_pbT)	1.00		1.00	1.00		1.00	1.00		1.00	1.00		1.00
Parking Bus, Adj	1.00	1.00	1.00	1.00	1.00	1.00	1.00	1.00	1.00	1.00	1.00	1.00
Adj Sat Flow, veh/h/ln	1900	1863	1900	1900	1863	1900	1863	1863	1900	1863	1863	1863
Adj Flow Rate, veh/h	98	5	3	114	16	12	5	1886	21	11	1359	147
Adj No. of Lanes	0	1	0	0	1	0	1	2	0	1	2	1
Peak Hour Factor	0.92	0.92	0.92	0.92	0.92	0.92	0.92	0.92	0.92	0.92	0.92	0.92
Percent Heavy Veh, %	2	2	2	2	2	2	2	2	2	2	2	2
Cap, veh/h	210	8	5	198	20	15	7	2805	31	14	2782	1245
Arrive On Green	0.11	0.11	0.10	0.11	0.11	0.10	0.00	0.78	0.77	0.01	0.79	0.79
Sat Flow, veh/h	1387	71	42	1312	184	138	1774	3585	40	1774	3539	1583
Grp Volume(v), veh/h	106	0	0	142	0	0	5	929	978	11	1359	147
Grp Sat Flow(s),veh/h/ln	1500	0	0	1634	0	0	1774	1770	1856	1774	1770	1583
Q Serve(g_s), s	0.0	0.0	0.0	1.8	0.0	0.0	0.3	28.9	29.1	0.7	16.0	2.6
Cycle Q Clear(g_c), s	7.9	0.0	0.0	9.8	0.0	0.0	0.3	28.9	29.1	0.7	16.0	2.6
Prop In Lane	0.92		0.03	0.80		0.08	1.00		0.02	1.00		1.00
Lane Grp Cap(c), veh/h	223	0	0	234	0	0	7	1384	1452	14	2782	1245
V/C Ratio(X)	0.48	0.00	0.00	0.61	0.00	0.00	0.73	0.67	0.67	0.81	0.49	0.12
Avail Cap(c_a), veh/h	430	0	0	450	0	0	118	1384	1452	118	2782	1245
HCM Platoon Ratio	1.00	1.00	1.00	1.00	1.00	1.00	1.00	1.00	1.00	1.00	1.00	1.00
Upstream Filter(I)	1.00	0.00	0.00	1.00	0.00	0.00	0.64	0.64	0.64	0.85	0.85	0.85
Uniform Delay (d), s/veh	51.1	0.0	0.0	51.8	0.0	0.0	59.7	6.0	6.0	59.5	4.5	3.0
Incr Delay (d2), s/veh	1.6	0.0	0.0	2.5	0.0	0.0	30.0	1.7	1.6	28.6	0.5	0.2
Initial Q Delay(d3),s/veh	0.0	0.0	0.0	0.0	0.0	0.0	0.0	0.0	0.0	0.0	0.0	0.0
%ile BackOfQ(50%),veh/ln	3.5	0.0	0.0	4.7	0.0	0.0	0.2	14.6	15.3	0.5	7.9	1.2
LnGrp Delay(d),s/veh	52.6	0.0	0.0	54.3	0.0	0.0	89.7	7.7	7.6	88.0	5.0	3.2
LnGrp LOS	D			D			F	A	A	F	A	A
Approach Vol, veh/h		106			142			1912			1517	
Approach Delay, s/veh		52.6			54.3			7.9			5.4	
Approach LOS		D			D			A			A	

Timer	1	2	3	4	5	6	7	8
Assigned Phs	1	2		4	5	6		8
Phs Duration (G+Y+Rc), s	4.5	98.3		17.2	4.9	97.9		17.2
Change Period (Y+Rc), s	4.0	5.0		5.0	4.0	5.0		5.0
Max Green Setting (Gmax), s	8.0	68.0		30.0	8.0	68.0		30.0
Max Q Clear Time (g_c+I1), s	2.3	18.0		11.8	2.7	31.1		9.9
Green Ext Time (p_c), s	0.0	31.8		0.5	0.0	32.3		0.3

Intersection Summary	
HCM 2010 Ctrl Delay	9.9
HCM 2010 LOS	A

Movement	EBL	EBT	EBR	WBL	WBT	WBR	NBL	NBT	NBR	SBL	SBT	SBR
Lane Configurations												
Traffic Volume (veh/h)	145	30	20	145	25	35	25	1555	75	10	1290	70
Future Volume (veh/h)	145	30	20	145	25	35	25	1555	75	10	1290	70
Number	3	8	18	7	4	14	1	6	16	5	2	12
Initial Q (Qb), veh	0	0	0	0	0	0	0	0	0	0	0	0
Ped-Bike Adj(A_pbT)	0.99		0.98	0.99		0.98	1.00		1.00	1.00		1.00
Parking Bus, Adj	1.00	1.00	1.00	1.00	1.00	1.00	1.00	1.00	1.00	1.00	1.00	1.00
Adj Sat Flow, veh/h/ln	1900	1863	1863	1863	1863	1900	1863	1863	1900	1863	1863	1900
Adj Flow Rate, veh/h	158	33	2	158	27	5	27	1690	80	11	1402	73
Adj No. of Lanes	0	1	1	1	1	0	1	2	0	1	2	0
Peak Hour Factor	0.92	0.92	0.92	0.92	0.92	0.92	0.92	0.92	0.92	0.92	0.92	0.92
Percent Heavy Veh, %	2	2	2	2	2	2	2	2	2	2	2	2
Cap, veh/h	229	38	265	307	259	48	34	2536	119	13	2483	129
Arrive On Green	0.17	0.17	0.17	0.17	0.17	0.16	0.04	1.00	1.00	0.01	0.73	0.72
Sat Flow, veh/h	1070	224	1558	1358	1525	282	1774	3442	162	1774	3423	178
Grp Volume(v), veh/h	191	0	2	158	0	32	27	865	905	11	723	752
Grp Sat Flow(s),veh/h/ln	1294	0	1558	1358	0	1807	1774	1770	1834	1774	1770	1831
Q Serve(g_s), s	18.4	0.0	0.1	0.0	0.0	2.1	2.1	0.0	0.0	0.9	26.6	26.8
Cycle Q Clear(g_c), s	20.5	0.0	0.1	13.4	0.0	2.1	2.1	0.0	0.0	0.9	26.6	26.8
Prop In Lane	0.83		1.00	1.00		0.16	1.00		0.09	1.00		0.10
Lane Grp Cap(c), veh/h	267	0	265	307	0	307	34	1304	1352	13	1283	1328
V/C Ratio(X)	0.72	0.00	0.01	0.51	0.00	0.10	0.79	0.66	0.67	0.83	0.56	0.57
Avail Cap(c_a), veh/h	310	0	312	348	0	361	139	1304	1352	139	1283	1328
HCM Platoon Ratio	1.00	1.00	1.00	1.00	1.00	1.00	2.00	2.00	2.00	1.00	1.00	1.00
Upstream Filter(I)	1.00	0.00	1.00	1.00	0.00	1.00	0.50	0.50	0.50	0.85	0.85	0.85
Uniform Delay (d), s/veh	57.8	0.0	48.3	53.8	0.0	49.2	67.0	0.0	0.0	69.4	8.9	9.0
Incr Delay (d2), s/veh	6.5	0.0	0.0	1.3	0.0	0.1	7.6	1.3	1.3	32.3	1.5	1.5
Initial Q Delay(d3),s/veh	0.0	0.0	0.0	0.0	0.0	0.0	0.0	0.0	0.0	0.0	0.0	0.0
%ile BackOfQ(50%),veh/ln	7.7	0.0	0.1	5.8	0.0	1.1	1.1	0.5	0.5	0.5	13.4	13.9
LnGrp Delay(d),s/veh	64.2	0.0	48.3	55.1	0.0	49.3	74.6	1.3	1.3	101.7	10.5	10.5
LnGrp LOS	E		D	E		D	E	A	A	F	B	B
Approach Vol, veh/h		193			190			1797			1486	
Approach Delay, s/veh		64.1			54.2			2.4			11.2	
Approach LOS		E			D			A			B	

Timer	1	2	3	4	5	6	7	8
Assigned Phs	1	2		4	5	6		8
Phs Duration (G+Y+Rc), s	6.7	105.5		27.8	5.0	107.2		27.8
Change Period (Y+Rc), s	4.0	5.0		5.0	4.0	5.0		5.0
Max Green Setting (Gmax), s	11.0	88.0		27.0	11.0	88.0		27.0
Max Q Clear Time (g_c+I1), s	4.1	28.8		15.4	2.9	2.0		22.5
Green Ext Time (p_c), s	0.0	25.7		0.5	0.0	43.3		0.3

Intersection Summary	
HCM 2010 Ctrl Delay	11.9
HCM 2010 LOS	B

Movement	EBL	EBT	EBR	WBL	WBT	WBR	NBL	NBT	NBR	SBL	SBT	SBR
Lane Configurations												
Traffic Volume (veh/h)	15	110	35	95	75	715	25	870	120	520	870	20
Future Volume (veh/h)	15	110	35	95	75	715	25	870	120	520	870	20
Number	7	4	14	3	8	18	1	6	16	5	2	12
Initial Q (Qb), veh	0	0	0	0	0	0	0	0	0	0	0	0
Ped-Bike Adj(A_pbT)	0.99		0.99	0.99		0.99	1.00		1.00	1.00		1.00
Parking Bus, Adj	1.00	1.00	1.00	1.00	1.00	1.00	1.00	1.00	1.00	1.00	1.00	1.00
Adj Sat Flow, veh/h/ln	1900	1863	1863	1863	1863	1863	1863	1863	1863	1863	1863	1900
Adj Flow Rate, veh/h	16	120	5	103	82	438	27	946	54	565	946	21
Adj No. of Lanes	0	1	1	1	1	1	1	2	1	2	2	0
Peak Hour Factor	0.92	0.92	0.92	0.92	0.92	0.92	0.92	0.92	0.92	0.92	0.92	0.92
Percent Heavy Veh, %	2	2	2	2	2	2	2	2	2	2	2	2
Cap, veh/h	52	341	327	353	566	477	34	1524	679	619	2093	46
Arrive On Green	0.21	0.21	0.21	0.07	0.30	0.30	0.02	0.43	0.43	0.36	1.00	1.00
Sat Flow, veh/h	110	1628	1563	1774	1863	1569	1774	3539	1576	3442	3540	79
Grp Volume(v), veh/h	136	0	5	103	82	438	27	946	54	565	473	494
Grp Sat Flow(s),veh/h/ln	1738	0	1563	1774	1863	1569	1774	1770	1576	1721	1770	1849
Q Serve(g_s), s	0.0	0.0	0.4	6.1	4.5	37.7	2.1	29.1	2.8	21.9	0.0	0.0
Cycle Q Clear(g_c), s	8.7	0.0	0.4	6.1	4.5	37.7	2.1	29.1	2.8	21.9	0.0	0.0
Prop In Lane	0.12		1.00	1.00		1.00	1.00		1.00	1.00		0.04
Lane Grp Cap(c), veh/h	392	0	327	353	566	477	34	1524	679	619	1046	1093
V/C Ratio(X)	0.35	0.00	0.02	0.29	0.14	0.92	0.79	0.62	0.08	0.91	0.45	0.45
Avail Cap(c_a), veh/h	392	0	327	527	665	560	177	1524	679	836	1046	1093
HCM Platoon Ratio	1.00	1.00	1.00	1.00	1.00	1.00	1.00	1.00	1.00	2.00	2.00	2.00
Upstream Filter(I)	1.00	0.00	1.00	1.00	1.00	1.00	0.79	0.79	0.79	0.73	0.73	0.73
Uniform Delay (d), s/veh	47.2	0.0	43.9	38.0	35.5	47.1	68.4	31.0	23.5	43.8	0.0	0.0
Incr Delay (d2), s/veh	0.5	0.0	0.0	0.5	0.1	18.6	11.4	1.5	0.2	7.5	1.0	1.0
Initial Q Delay(d3),s/veh	0.0	0.0	0.0	0.0	0.0	0.0	0.0	0.0	0.0	0.0	0.0	0.0
%ile BackOfQ(50%),veh/ln	4.6	0.0	0.2	3.0	2.3	18.8	1.2	14.5	1.3	11.0	0.3	0.3
LnGrp Delay(d),s/veh	47.7	0.0	43.9	38.4	35.6	65.7	79.8	32.5	23.7	51.3	1.0	1.0
LnGrp LOS	D		D	D	D	E	E	C	C	D	A	A
Approach Vol, veh/h		141			623			1027			1532	
Approach Delay, s/veh		47.6			57.2			33.3			19.6	
Approach LOS		D			E			C			B	

Timer	1	2	3	4	5	6	7	8
Assigned Phs	1	2	3	4	5	6		8
Phs Duration (G+Y+Rc), s	6.7	86.8	13.2	33.3	29.2	64.3		46.5
Change Period (Y+Rc), s	4.0	5.0	5.0	5.0	4.0	5.0		5.0
Max Green Setting (Gmax), s	14.0	63.0	22.0	22.0	34.0	43.0		49.0
Max Q Clear Time (g_c+I1), s	4.1	2.0	8.1	10.7	23.9	31.1		39.7
Green Ext Time (p_c), s	0.0	12.3	0.3	0.4	1.3	6.7		1.8

Intersection Summary	
HCM 2010 Ctrl Delay	32.0
HCM 2010 LOS	C

Notes

Intersection	
Int Delay, s/veh	0

Movement	WBL	WBR	NBT	NBR	SBL	SBT
Lane Configurations		↱	↑	↱		↑
Traffic Vol, veh/h	0	0	670	0	0	790
Future Vol, veh/h	0	0	670	0	0	790
Conflicting Peds, #/hr	0	0	0	0	0	0
Sign Control	Stop	Stop	Free	Free	Free	Free
RT Channelized	-	None	-	None	-	None
Storage Length	-	0	-	0	-	-
Veh in Median Storage, #	0	-	0	-	-	0
Grade, %	0	-	0	-	-	0
Peak Hour Factor	92	92	92	92	92	92
Heavy Vehicles, %	2	2	2	2	2	2
Mvmt Flow	0	0	728	0	0	859

Major/Minor	Minor1		Major1		Major2	
Conflicting Flow All	-	728	0	0	-	-
Stage 1	-	-	-	-	-	-
Stage 2	-	-	-	-	-	-
Critical Hdwy	-	6.22	-	-	-	-
Critical Hdwy Stg 1	-	-	-	-	-	-
Critical Hdwy Stg 2	-	-	-	-	-	-
Follow-up Hdwy	-	3.318	-	-	-	-
Pot Cap-1 Maneuver	0	423	-	-	0	-
Stage 1	0	-	-	-	0	-
Stage 2	0	-	-	-	0	-
Platoon blocked, %			-	-		-
Mov Cap-1 Maneuver	-	423	-	-	-	-
Mov Cap-2 Maneuver	-	-	-	-	-	-
Stage 1	-	-	-	-	-	-
Stage 2	-	-	-	-	-	-

Approach	WB	NB	SB
HCM Control Delay, s	0	0	0
HCM LOS	A		

Minor Lane/Major Mvmt	NBT	NBR	WBLn1	SBT
Capacity (veh/h)	-	-	-	-
HCM Lane V/C Ratio	-	-	-	-
HCM Control Delay (s)	-	-	0	-
HCM Lane LOS	-	-	A	-
HCM 95th %tile Q(veh)	-	-	-	-

Intersection	
Int Delay, s/veh	0

Movement	WBL	WBR	NBT	NBR	SBL	SBT
Lane Configurations						
Traffic Vol, veh/h	0	0	715	0	0	875
Future Vol, veh/h	0	0	715	0	0	875
Conflicting Peds, #/hr	0	0	0	0	0	0
Sign Control	Stop	Stop	Free	Free	Free	Free
RT Channelized	-	None	-	None	-	None
Storage Length	0	100	-	100	100	-
Veh in Median Storage, #	0	-	0	-	-	0
Grade, %	0	-	0	-	-	0
Peak Hour Factor	92	92	92	92	92	92
Heavy Vehicles, %	2	2	2	2	2	2
Mvmt Flow	0	0	777	0	0	951

Major/Minor	Minor1		Major1		Major2	
Conflicting Flow All	1728	777	0	0	777	0
Stage 1	777	-	-	-	-	-
Stage 2	951	-	-	-	-	-
Critical Hdwy	6.42	6.22	-	-	4.12	-
Critical Hdwy Stg 1	5.42	-	-	-	-	-
Critical Hdwy Stg 2	5.42	-	-	-	-	-
Follow-up Hdwy	3.518	3.318	-	-	2.218	-
Pot Cap-1 Maneuver	97	397	-	-	839	-
Stage 1	453	-	-	-	-	-
Stage 2	375	-	-	-	-	-
Platoon blocked, %			-	-		-
Mov Cap-1 Maneuver	97	397	-	-	839	-
Mov Cap-2 Maneuver	231	-	-	-	-	-
Stage 1	453	-	-	-	-	-
Stage 2	375	-	-	-	-	-

Approach	WB	NB	SB
HCM Control Delay, s	0	0	0
HCM LOS	A		

Minor Lane/Major Mvmt	NBT	NBR	WBLn1	WBLn2	SBL	SBT
Capacity (veh/h)	-	-	-	-	839	-
HCM Lane V/C Ratio	-	-	-	-	-	-
HCM Control Delay (s)	-	-	0	0	0	-
HCM Lane LOS	-	-	A	A	A	-
HCM 95th %tile Q(veh)	-	-	-	-	0	-

Intersection	
Int Delay, s/veh	3.4

Movement	EBL	EBT	EBR	WBL	WBT	WBR	NBL	NBT	NBR	SBL	SBT	SBR
Lane Configurations												
Traffic Vol, veh/h	5	30	5	5	55	5	10	5	5	5	5	20
Future Vol, veh/h	5	30	5	5	55	5	10	5	5	5	5	20
Conflicting Peds, #/hr	0	0	0	0	0	0	0	0	0	0	0	0
Sign Control	Free	Free	Free	Free	Free	Free	Stop	Stop	Stop	Stop	Stop	Stop
RT Channelized	-	-	None	-	-	None	-	-	None	-	-	None
Storage Length	100	-	-	100	-	-	-	-	-	-	-	-
Veh in Median Storage, #	-	0	-	-	0	-	-	0	-	-	0	-
Grade, %	-	0	-	-	0	-	-	0	-	-	0	-
Peak Hour Factor	92	92	92	92	92	92	92	92	92	92	92	92
Heavy Vehicles, %	2	2	2	2	2	2	2	2	2	2	2	2
Mvmt Flow	5	33	5	5	60	5	11	5	5	5	5	22

Major/Minor	Major1			Major2			Minor1			Minor2		
Conflicting Flow All	65	0	0	38	0	0	132	121	36	124	121	63
Stage 1	-	-	-	-	-	-	46	46	-	73	73	-
Stage 2	-	-	-	-	-	-	86	75	-	51	48	-
Critical Hdwy	4.12	-	-	4.12	-	-	7.12	6.52	6.22	7.12	6.52	6.22
Critical Hdwy Stg 1	-	-	-	-	-	-	6.12	5.52	-	6.12	5.52	-
Critical Hdwy Stg 2	-	-	-	-	-	-	6.12	5.52	-	6.12	5.52	-
Follow-up Hdwy	2.218	-	-	2.218	-	-	3.518	4.018	3.318	3.518	4.018	3.318
Pot Cap-1 Maneuver	1537	-	-	1572	-	-	840	769	1037	850	769	1002
Stage 1	-	-	-	-	-	-	968	857	-	937	834	-
Stage 2	-	-	-	-	-	-	922	833	-	962	855	-
Platoon blocked, %		-	-		-	-						
Mov Cap-1 Maneuver	1537	-	-	1572	-	-	813	764	1037	837	764	1002
Mov Cap-2 Maneuver	-	-	-	-	-	-	813	764	-	837	764	-
Stage 1	-	-	-	-	-	-	965	854	-	934	831	-
Stage 2	-	-	-	-	-	-	893	831	-	948	852	-

Approach	EB	WB	NB	SB
HCM Control Delay, s	0.9	0.6	9.4	9
HCM LOS			A	A

Minor Lane/Major Mvmt	NBLn1	EBL	EBT	EBR	WBL	WBT	WBR	SBLn1
Capacity (veh/h)	845	1537	-	-	1572	-	-	924
HCM Lane V/C Ratio	0.026	0.004	-	-	0.003	-	-	0.035
HCM Control Delay (s)	9.4	7.4	-	-	7.3	-	-	9
HCM Lane LOS	A	A	-	-	A	-	-	A
HCM 95th %tile Q(veh)	0.1	0	-	-	0	-	-	0.1

Intersection	
Int Delay, s/veh	4.2

Movement	EBL	EBT	EBR	WBL	WBT	WBR	NBL	NBT	NBR	SBL	SBT	SBR
Lane Configurations												
Traffic Vol, veh/h	5	20	10	5	10	5	0	5	5	5	5	15
Future Vol, veh/h	5	20	10	5	10	5	0	5	5	5	5	15
Conflicting Peds, #/hr	0	0	0	0	0	0	0	0	0	0	0	0
Sign Control	Free	Free	Free	Free	Free	Free	Stop	Stop	Stop	Stop	Stop	Stop
RT Channelized	-	-	None	-	-	None	-	-	None	-	-	None
Storage Length	-	-	-	-	-	-	-	-	-	-	-	-
Veh in Median Storage, #	-	0	-	-	0	-	-	0	-	-	0	-
Grade, %	-	0	-	-	0	-	-	0	-	-	0	-
Peak Hour Factor	92	92	92	92	92	92	92	92	92	92	92	92
Heavy Vehicles, %	2	2	2	2	2	2	2	2	2	2	2	2
Mvmt Flow	5	22	11	5	11	5	0	5	5	5	5	16

Major/Minor	Major1			Major2			Minor1			Minor2		
Conflicting Flow All	16	0	0	33	0	0	72	64	28	67	67	14
Stage 1	-	-	-	-	-	-	38	38	-	24	24	-
Stage 2	-	-	-	-	-	-	34	26	-	43	43	-
Critical Hdwy	4.12	-	-	4.12	-	-	7.12	6.52	6.22	7.12	6.52	6.22
Critical Hdwy Stg 1	-	-	-	-	-	-	6.12	5.52	-	6.12	5.52	-
Critical Hdwy Stg 2	-	-	-	-	-	-	6.12	5.52	-	6.12	5.52	-
Follow-up Hdwy	2.218	-	-	2.218	-	-	3.518	4.018	3.318	3.518	4.018	3.318
Pot Cap-1 Maneuver	1602	-	-	1579	-	-	919	827	1047	926	824	1066
Stage 1	-	-	-	-	-	-	977	863	-	994	875	-
Stage 2	-	-	-	-	-	-	982	874	-	971	859	-
Platoon blocked, %		-	-		-	-						
Mov Cap-1 Maneuver	1602	-	-	1579	-	-	896	822	1047	912	819	1066
Mov Cap-2 Maneuver	-	-	-	-	-	-	896	822	-	912	819	-
Stage 1	-	-	-	-	-	-	974	860	-	991	872	-
Stage 2	-	-	-	-	-	-	958	871	-	957	856	-

Approach	EB	WB	NB	SB
HCM Control Delay, s	1	1.8	9	8.8
HCM LOS			A	A

Minor Lane/Major Mvmt	NBLn1	EBL	EBT	EBR	WBL	WBT	WBR	SBLn1
Capacity (veh/h)	921	1602	-	-	1579	-	-	974
HCM Lane V/C Ratio	0.012	0.003	-	-	0.003	-	-	0.028
HCM Control Delay (s)	9	7.3	0	-	7.3	0	-	8.8
HCM Lane LOS	A	A	A	-	A	A	-	A
HCM 95th %tile Q(veh)	0	0	-	-	0	-	-	0.1

APPENDIX C

LEVEL OF SERVICE CALCULATIONS

- Future Year 2022 Scenario 1 PM Peak

HCM 2010 Signalized Intersection Summary
1: Napilihau Street

08/16/2017

Movement	EBL	EBT	EBR	WBL	WBT	WBR	NBL	NBT	NBR	SBL	SBT	SBR
Lane Configurations												
Traffic Volume (veh/h)	55	25	380	60	25	5	385	220	65	10	285	75
Future Volume (veh/h)	55	25	380	60	25	5	385	220	65	10	285	75
Number	7	4	14	3	8	18	5	2	12	1	6	16
Initial Q (Qb), veh	0	0	0	0	0	0	0	0	0	0	0	0
Ped-Bike Adj(A_pbT)	1.00		1.00	1.00		1.00	1.00		1.00	1.00		1.00
Parking Bus, Adj	1.00	1.00	1.00	1.00	1.00	1.00	1.00	1.00	1.00	1.00	1.00	1.00
Adj Sat Flow, veh/h/ln	1900	1863	1863	1863	1863	1900	1863	1863	1863	1863	1863	1863
Adj Flow Rate, veh/h	60	27	24	65	27	1	418	239	45	11	310	20
Adj No. of Lanes	0	1	1	1	1	0	1	1	1	1	1	1
Peak Hour Factor	0.92	0.92	0.92	0.92	0.92	0.92	0.92	0.92	0.92	0.92	0.92	0.92
Percent Heavy Veh, %	2	2	2	2	2	2	2	2	2	2	2	2
Cap, veh/h	229	71	182	232	205	8	505	1023	870	15	509	432
Arrive On Green	0.11	0.11	0.11	0.11	0.11	0.11	0.28	0.55	0.55	0.01	0.27	0.27
Sat Flow, veh/h	911	617	1583	1348	1785	66	1774	1863	1583	1774	1863	1583
Grp Volume(v), veh/h	87	0	24	65	0	28	418	239	45	11	310	20
Grp Sat Flow(s),veh/h/ln	1528	0	1583	1348	0	1851	1774	1863	1583	1774	1863	1583
Q Serve(g_s), s	1.9	0.0	0.7	2.3	0.0	0.7	10.8	3.2	0.6	0.3	7.1	0.5
Cycle Q Clear(g_c), s	2.5	0.0	0.7	4.9	0.0	0.7	10.8	3.2	0.6	0.3	7.1	0.5
Prop In Lane	0.69		1.00	1.00		0.04	1.00		1.00	1.00		1.00
Lane Grp Cap(c), veh/h	300	0	182	232	0	213	505	1023	870	15	509	432
V/C Ratio(X)	0.29	0.00	0.13	0.28	0.00	0.13	0.83	0.23	0.05	0.73	0.61	0.05
Avail Cap(c_a), veh/h	863	0	777	738	0	908	1088	3008	2557	544	2437	2071
HCM Platoon Ratio	1.00	1.00	1.00	1.00	1.00	1.00	1.00	1.00	1.00	1.00	1.00	1.00
Upstream Filter(I)	1.00	0.00	1.00	1.00	0.00	1.00	1.00	1.00	1.00	1.00	1.00	1.00
Uniform Delay (d), s/veh	20.2	0.0	19.5	22.6	0.0	19.5	16.4	5.7	5.1	24.2	15.5	13.1
Incr Delay (d2), s/veh	0.5	0.0	0.3	0.7	0.0	0.3	3.5	0.2	0.1	49.2	2.5	0.1
Initial Q Delay(d3),s/veh	0.0	0.0	0.0	0.0	0.0	0.0	0.0	0.0	0.0	0.0	0.0	0.0
%ile BackOfQ(50%),veh/ln	1.1	0.0	0.3	0.9	0.0	0.4	5.7	1.7	0.3	0.4	4.0	0.2
LnGrp Delay(d),s/veh	20.8	0.0	19.8	23.2	0.0	19.7	19.9	5.9	5.2	73.4	18.0	13.2
LnGrp LOS	C		B	C		B	B	A	A	E	B	B
Approach Vol, veh/h		111			93			702			341	
Approach Delay, s/veh		20.6			22.2			14.2			19.5	
Approach LOS		C			C			B			B	

Timer	1	2	3	4	5	6	7	8
Assigned Phs	1	2		4	5	6		8
Phs Duration (G+Y+Rc), s	5.4	32.9		10.6	18.9	19.4		10.6
Change Period (Y+Rc), s	5.0	6.0		5.0	5.0	6.0		5.0
Max Green Setting (Gmax), s	15.0	79.0		24.0	30.0	64.0		24.0
Max Q Clear Time (g_c+I1), s	2.3	5.2		4.5	12.8	9.1		6.9
Green Ext Time (p_c), s	0.0	3.5		0.5	1.2	4.3		0.2

Intersection Summary	
HCM 2010 Ctrl Delay	16.8
HCM 2010 LOS	B

Movement	EBL	EBT	EBR	WBL	WBT	WBR	NBL	NBT	NBR	SBL	SBT	SBR
Lane Configurations												
Traffic Volume (veh/h)	75	20	155	45	15	10	200	595	45	25	590	80
Future Volume (veh/h)	75	20	155	45	15	10	200	595	45	25	590	80
Number	7	4	14	3	8	18	5	2	12	1	6	16
Initial Q (Qb), veh	0	0	0	0	0	0	0	0	0	0	0	0
Ped-Bike Adj(A_pbT)	1.00		1.00	1.00		1.00	1.00		1.00	1.00		1.00
Parking Bus, Adj	1.00	1.00	1.00	1.00	1.00	1.00	1.00	1.00	1.00	1.00	1.00	1.00
Adj Sat Flow, veh/h/ln	1900	1863	1863	1863	1863	1900	1863	1863	1863	1863	1863	1863
Adj Flow Rate, veh/h	82	22	14	49	16	1	217	647	0	27	641	45
Adj No. of Lanes	0	1	1	1	1	0	1	1	1	1	1	1
Peak Hour Factor	0.92	0.92	0.92	0.92	0.92	0.92	0.92	0.92	0.92	0.92	0.92	0.92
Percent Heavy Veh, %	2	2	2	2	2	2	2	2	2	2	2	2
Cap, veh/h	271	55	207	238	226	14	441	978	831	392	819	693
Arrive On Green	0.13	0.13	0.13	0.13	0.13	0.13	0.10	0.52	0.00	0.02	0.44	0.44
Sat Flow, veh/h	1075	423	1583	1367	1735	108	1774	1863	1583	1774	1863	1576
Grp Volume(v), veh/h	104	0	14	49	0	17	217	647	0	27	641	45
Grp Sat Flow(s),veh/h/ln	1498	0	1583	1367	0	1844	1774	1863	1583	1774	1863	1576
Q Serve(g_s), s	2.7	0.0	0.4	1.7	0.0	0.4	3.0	12.4	0.0	0.4	14.4	0.8
Cycle Q Clear(g_c), s	3.1	0.0	0.4	4.8	0.0	0.4	3.0	12.4	0.0	0.4	14.4	0.8
Prop In Lane	0.79		1.00	1.00		0.06	1.00		1.00	1.00		1.00
Lane Grp Cap(c), veh/h	327	0	207	238	0	241	441	978	831	392	819	693
V/C Ratio(X)	0.32	0.00	0.07	0.21	0.00	0.07	0.49	0.66	0.00	0.07	0.78	0.06
Avail Cap(c_a), veh/h	883	0	806	756	0	939	798	1935	1645	901	1935	1637
HCM Platoon Ratio	1.00	1.00	1.00	1.00	1.00	1.00	1.00	1.00	1.00	1.00	1.00	1.00
Upstream Filter(I)	1.00	0.00	1.00	1.00	0.00	1.00	1.00	1.00	0.00	1.00	1.00	1.00
Uniform Delay (d), s/veh	19.9	0.0	18.7	22.2	0.0	18.7	8.7	8.5	0.0	8.0	11.7	7.9
Incr Delay (d2), s/veh	0.6	0.0	0.1	0.4	0.0	0.1	0.9	0.8	0.0	0.1	1.7	0.0
Initial Q Delay(d3),s/veh	0.0	0.0	0.0	0.0	0.0	0.0	0.0	0.0	0.0	0.0	0.0	0.0
%ile BackOfQ(50%),veh/ln	1.4	0.0	0.2	0.7	0.0	0.2	1.5	6.5	0.0	0.2	7.7	0.4
LnGrp Delay(d),s/veh	20.4	0.0	18.9	22.6	0.0	18.9	9.6	9.3	0.0	8.1	13.4	8.0
LnGrp LOS	C		B	C		B	A	A		A	B	A
Approach Vol, veh/h		118			66			864			713	
Approach Delay, s/veh		20.2			21.6			9.3			12.9	
Approach LOS		C			C			A			B	

Timer	1	2	3	4	5	6	7	8
Assigned Phs	1	2		4	5	6		8
Phs Duration (G+Y+Rc), s	5.9	31.8		11.4	10.1	27.6		11.4
Change Period (Y+Rc), s	5.0	6.0		5.0	5.0	6.0		5.0
Max Green Setting (Gmax), s	15.0	51.0		25.0	15.0	51.0		25.0
Max Q Clear Time (g_c+I1), s	2.4	14.4		5.1	5.0	16.4		6.8
Green Ext Time (p_c), s	0.0	4.9		0.5	0.4	4.9		0.1

Intersection Summary	
HCM 2010 Ctrl Delay	12.0
HCM 2010 LOS	B

Movement	EBL	EBT	EBR	WBL	WBT	WBR	NBL	NBT	NBR	SBL	SBT	SBR
Lane Configurations												
Traffic Volume (veh/h)	60	15	95	30	15	25	165	815	55	25	765	75
Future Volume (veh/h)	60	15	95	30	15	25	165	815	55	25	765	75
Number	7	4	14	3	8	18	5	2	12	1	6	16
Initial Q (Qb), veh	0	0	0	0	0	0	0	0	0	0	0	0
Ped-Bike Adj(A_pbT)	1.00		0.97	1.00		0.98	1.00		1.00	1.00		1.00
Parking Bus, Adj	1.00	1.00	1.00	1.00	1.00	1.00	1.00	1.00	1.00	1.00	1.00	1.00
Adj Sat Flow, veh/h/ln	1863	1863	1900	1863	1863	1863	1863	1863	1863	1863	1863	1863
Adj Flow Rate, veh/h	65	16	3	33	16	1	179	886	37	27	832	42
Adj No. of Lanes	1	1	0	1	1	1	1	1	1	1	1	1
Peak Hour Factor	0.92	0.92	0.92	0.92	0.92	0.92	0.92	0.92	0.92	0.92	0.92	0.92
Percent Heavy Veh, %	2	2	2	2	2	2	2	2	2	2	2	2
Cap, veh/h	85	185	35	45	184	154	220	1132	963	33	936	794
Arrive On Green	0.05	0.12	0.12	0.03	0.10	0.10	0.12	0.61	0.61	0.02	0.50	0.50
Sat Flow, veh/h	1774	1518	285	1774	1863	1554	1774	1863	1583	1774	1863	1580
Grp Volume(v), veh/h	65	0	19	33	16	1	179	886	37	27	832	42
Grp Sat Flow(s),veh/h/ln	1774	0	1803	1774	1863	1554	1774	1863	1583	1774	1863	1580
Q Serve(g_s), s	3.2	0.0	0.8	1.6	0.7	0.1	8.7	31.4	0.8	1.3	35.4	1.2
Cycle Q Clear(g_c), s	3.2	0.0	0.8	1.6	0.7	0.1	8.7	31.4	0.8	1.3	35.4	1.2
Prop In Lane	1.00		0.16	1.00		1.00	1.00		1.00	1.00		1.00
Lane Grp Cap(c), veh/h	85	0	219	45	184	154	220	1132	963	33	936	794
V/C Ratio(X)	0.77	0.00	0.09	0.74	0.09	0.01	0.81	0.78	0.04	0.82	0.89	0.05
Avail Cap(c_a), veh/h	402	0	429	402	443	370	503	1372	1167	503	1372	1164
HCM Platoon Ratio	1.00	1.00	1.00	1.00	1.00	1.00	1.00	1.00	1.00	1.00	1.00	1.00
Upstream Filter(I)	1.00	0.00	1.00	1.00	1.00	1.00	1.00	1.00	1.00	1.00	1.00	1.00
Uniform Delay (d), s/veh	41.5	0.0	34.4	42.7	36.1	35.8	37.7	12.9	6.9	43.1	19.7	11.2
Incr Delay (d2), s/veh	13.3	0.0	0.2	21.0	0.2	0.0	7.2	2.5	0.0	37.4	5.3	0.0
Initial Q Delay(d3),s/veh	0.0	0.0	0.0	0.0	0.0	0.0	0.0	0.0	0.0	0.0	0.0	0.0
%ile BackOfQ(50%),veh/ln	1.9	0.0	0.4	1.1	0.4	0.0	4.7	16.8	0.4	1.0	19.4	0.5
LnGrp Delay(d),s/veh	54.8	0.0	34.6	63.7	36.3	35.8	44.8	15.4	7.0	80.5	25.0	11.2
LnGrp LOS	D		C	E	D	D	D	B	A	F	C	B
Approach Vol, veh/h		84			50			1102			901	
Approach Delay, s/veh		50.3			54.4			19.9			26.1	
Approach LOS		D			D			B			C	

Timer	1	2	3	4	5	6	7	8
Assigned Phs	1	2	3	4	5	6	7	8
Phs Duration (G+Y+Rc), s	6.6	58.6	7.2	15.7	15.9	49.3	9.2	13.7
Change Period (Y+Rc), s	5.0	5.0	5.0	5.0	5.0	5.0	5.0	5.0
Max Green Setting (Gmax), s	25.0	65.0	20.0	21.0	25.0	65.0	20.0	21.0
Max Q Clear Time (g_c+I1), s	3.3	33.4	3.6	2.8	10.7	37.4	5.2	2.7
Green Ext Time (p_c), s	0.0	7.9	0.0	0.0	0.4	6.9	0.1	0.0

Intersection Summary	
HCM 2010 Ctrl Delay	24.5
HCM 2010 LOS	C

Notes

Movement	EBL	EBT	EBR	WBL	WBT	WBR	NBL	NBT	NBR	SBL	SBT	SBR
Lane Configurations												
Traffic Volume (veh/h)	80	5	600	80	10	10	605	920	10	5	830	20
Future Volume (veh/h)	80	5	600	80	10	10	605	920	10	5	830	20
Number	3	8	18	7	4	14	1	6	16	5	2	12
Initial Q (Qb), veh	0	0	0	0	0	0	0	0	0	0	0	0
Ped-Bike Adj(A_pbT)	1.00		1.00	1.00		1.00	1.00		1.00	1.00		1.00
Parking Bus, Adj	1.00	1.00	1.00	1.00	1.00	1.00	1.00	1.00	1.00	1.00	1.00	1.00
Adj Sat Flow, veh/h/ln	1900	1863	1863	1900	1863	1900	1863	1863	1900	1863	1863	1863
Adj Flow Rate, veh/h	87	5	0	87	11	9	658	1000	11	5	902	5
Adj No. of Lanes	0	1	1	0	1	0	1	2	0	1	2	1
Peak Hour Factor	0.92	0.92	0.92	0.92	0.92	0.92	0.92	0.92	0.92	0.92	0.92	0.92
Percent Heavy Veh, %	2	2	2	2	2	2	2	2	2	2	2	2
Cap, veh/h	203	7	139	186	15	12	702	2685	30	7	1263	565
Arrive On Green	0.10	0.09	0.00	0.10	0.09	0.09	0.40	0.75	0.75	0.00	0.36	0.36
Sat Flow, veh/h	1466	84	1583	1329	168	137	1774	3586	39	1774	3539	1583
Grp Volume(v), veh/h	92	0	0	107	0	0	658	493	518	5	902	5
Grp Sat Flow(s),veh/h/ln	1550	0	1583	1634	0	0	1774	1770	1856	1774	1770	1583
Q Serve(g_s), s	0.0	0.0	0.0	0.5	0.0	0.0	33.4	9.1	9.1	0.3	20.6	0.2
Cycle Q Clear(g_c), s	5.0	0.0	0.0	5.5	0.0	0.0	33.4	9.1	9.1	0.3	20.6	0.2
Prop In Lane	0.95		1.00	0.81		0.08	1.00		0.02	1.00		1.00
Lane Grp Cap(c), veh/h	227	0	139	230	0	0	702	1325	1389	7	1263	565
V/C Ratio(X)	0.41	0.00	0.00	0.47	0.00	0.00	0.94	0.37	0.37	0.72	0.71	0.01
Avail Cap(c_a), veh/h	553	0	506	521	0	0	1342	1325	1389	1342	2150	962
HCM Platoon Ratio	1.00	1.00	1.00	1.00	1.00	1.00	1.00	1.00	1.00	1.00	1.00	1.00
Upstream Filter(I)	1.00	0.00	0.00	1.00	0.00	0.00	1.00	1.00	1.00	1.00	1.00	1.00
Uniform Delay (d), s/veh	40.9	0.0	0.0	41.1	0.0	0.0	27.2	4.1	4.1	46.7	26.0	19.5
Incr Delay (d2), s/veh	1.2	0.0	0.0	1.5	0.0	0.0	2.8	0.4	0.4	40.7	1.6	0.0
Initial Q Delay(d3),s/veh	0.0	0.0	0.0	0.0	0.0	0.0	0.0	0.0	0.0	0.0	0.0	0.0
%ile BackOfQ(50%),veh/ln	2.3	0.0	0.0	2.7	0.0	0.0	16.8	4.5	4.7	0.2	10.3	0.1
LnGrp Delay(d),s/veh	42.1	0.0	0.0	42.6	0.0	0.0	30.0	4.5	4.5	87.4	27.7	19.5
LnGrp LOS	D			D			C	A	A	F	C	B
Approach Vol, veh/h		92			107			1669			912	
Approach Delay, s/veh		42.1			42.6			14.5			27.9	
Approach LOS		D			D			B			C	

Timer	1	2	3	4	5	6	7	8
Assigned Phs	1	2		4	5	6		8
Phs Duration (G+Y+Rc), s	41.1	39.5		13.2	4.4	76.2		13.2
Change Period (Y+Rc), s	4.0	6.0		5.0	4.0	6.0		5.0
Max Green Setting (Gmax), s	71.0	57.0		27.0	71.0	57.0		30.0
Max Q Clear Time (g_c+I1), s	35.4	22.6		7.5	2.3	11.1		7.0
Green Ext Time (p_c), s	1.7	10.8		0.3	0.0	12.5		0.3

Intersection Summary	
HCM 2010 Ctrl Delay	20.9
HCM 2010 LOS	C

Notes

Movement	EBL	EBT	EBR	WBL	WBT	WBR	NBL	NBT	NBR	SBL	SBT	SBR
Lane Configurations												
Traffic Volume (veh/h)	50	5	140	15	0	5	135	1475	10	10	1505	60
Future Volume (veh/h)	50	5	140	15	0	5	135	1475	10	10	1505	60
Number	3	8	18	7	4	14	1	6	16	5	2	12
Initial Q (Qb), veh	0	0	0	0	0	0	0	0	0	0	0	0
Ped-Bike Adj(A_pbT)	0.97		0.96	0.97		0.96	1.00		1.00	1.00		1.00
Parking Bus, Adj	1.00	1.00	1.00	1.00	1.00	1.00	1.00	1.00	1.00	1.00	1.00	1.00
Adj Sat Flow, veh/h/ln	1900	1863	1863	1900	1863	1900	1863	1863	1900	1863	1863	1863
Adj Flow Rate, veh/h	54	5	6	16	0	1	147	1603	11	11	1636	39
Adj No. of Lanes	0	1	1	0	1	0	1	2	0	1	2	1
Peak Hour Factor	0.92	0.92	0.92	0.92	0.92	0.92	0.92	0.92	0.92	0.92	0.92	0.92
Percent Heavy Veh, %	2	2	2	2	2	2	2	2	2	2	2	2
Cap, veh/h	228	18	173	185	2	7	180	2622	18	14	2246	1004
Arrive On Green	0.12	0.11	0.11	0.12	0.00	0.11	0.10	0.73	0.73	0.01	0.63	0.63
Sat Flow, veh/h	1354	155	1521	966	19	62	1774	3603	25	1774	3539	1582
Grp Volume(v), veh/h	59	0	6	17	0	0	147	787	827	11	1636	39
Grp Sat Flow(s),veh/h/ln	1509	0	1521	1047	0	0	1774	1770	1858	1774	1770	1582
Q Serve(g_s), s	0.0	0.0	0.3	0.9	0.0	0.0	7.6	20.3	20.3	0.6	29.3	0.9
Cycle Q Clear(g_c), s	2.9	0.0	0.3	3.8	0.0	0.0	7.6	20.3	20.3	0.6	29.3	0.9
Prop In Lane	0.92		1.00	0.94		0.06	1.00		0.01	1.00		1.00
Lane Grp Cap(c), veh/h	262	0	173	205	0	0	180	1288	1352	14	2246	1004
V/C Ratio(X)	0.23	0.00	0.03	0.08	0.00	0.00	0.82	0.61	0.61	0.78	0.73	0.04
Avail Cap(c_a), veh/h	448	0	376	387	0	0	400	1634	1716	209	2888	1291
HCM Platoon Ratio	1.00	1.00	1.00	1.00	1.00	1.00	1.00	1.00	1.00	1.00	1.00	1.00
Upstream Filter(I)	1.00	0.00	1.00	1.00	0.00	0.00	1.00	1.00	1.00	1.00	1.00	1.00
Uniform Delay (d), s/veh	37.4	0.0	36.7	38.6	0.0	0.0	41.0	6.2	6.2	46.1	11.6	6.4
Incr Delay (d2), s/veh	0.2	0.0	0.0	0.1	0.0	0.0	3.5	1.0	1.0	27.8	1.1	0.0
Initial Q Delay(d3),s/veh	0.0	0.0	0.0	0.0	0.0	0.0	0.0	0.0	0.0	0.0	0.0	0.0
%ile BackOfQ(50%),veh/ln	1.4	0.0	0.1	0.4	0.0	0.0	3.9	10.0	10.5	0.4	14.4	0.4
LnGrp Delay(d),s/veh	37.6	0.0	36.7	38.7	0.0	0.0	44.5	7.2	7.2	73.9	12.7	6.4
LnGrp LOS	D		D	D			D	A	A	E	B	A
Approach Vol, veh/h		65			17			1761			1686	
Approach Delay, s/veh		37.5			38.7			10.3			13.0	
Approach LOS		D			D			B			B	

Timer	1	2	3	4	5	6	7	8
Assigned Phs	1	2		4	5	6		8
Phs Duration (G+Y+Rc), s	13.4	64.1		15.6	4.7	72.8		15.6
Change Period (Y+Rc), s	4.0	5.0		5.0	4.0	5.0		5.0
Max Green Setting (Gmax), s	21.0	76.0		23.0	11.0	86.0		23.0
Max Q Clear Time (g_c+I1), s	9.6	31.3		5.8	2.6	22.3		4.9
Green Ext Time (p_c), s	0.1	27.8		0.0	0.0	31.2		0.1

Intersection Summary	
HCM 2010 Ctrl Delay	12.2
HCM 2010 LOS	B

Movement	EBL	EBT	EBR	WBL	WBT	WBR	NBL	NBT	NBR	SBL	SBT	SBR
Lane Configurations												
Traffic Volume (veh/h)	75	5	175	70	5	45	125	1460	60	35	1660	100
Future Volume (veh/h)	75	5	175	70	5	45	125	1460	60	35	1660	100
Number	3	8	18	7	4	14	1	6	16	5	2	12
Initial Q (Qb), veh	0	0	0	0	0	0	0	0	0	0	0	0
Ped-Bike Adj(A_pbT)	0.99		0.99	0.99		0.99	1.00		1.00	1.00		1.00
Parking Bus, Adj	1.00	1.00	1.00	1.00	1.00	1.00	1.00	1.00	1.00	1.00	1.00	1.00
Adj Sat Flow, veh/h/ln	1900	1863	1863	1863	1863	1900	1863	1863	1863	1863	1863	1863
Adj Flow Rate, veh/h	82	5	27	76	5	1	136	1587	49	38	1804	85
Adj No. of Lanes	0	1	1	1	1	0	1	2	1	1	2	1
Peak Hour Factor	0.92	0.92	0.92	0.92	0.92	0.92	0.92	0.92	0.92	0.92	0.92	0.92
Percent Heavy Veh, %	2	2	2	2	2	2	2	2	2	2	2	2
Cap, veh/h	212	12	205	142	197	39	157	2656	1187	49	2440	1091
Arrive On Green	0.14	0.13	0.13	0.13	0.13	0.13	0.09	0.75	0.75	0.03	0.69	0.69
Sat Flow, veh/h	1298	89	1562	1358	1504	301	1774	3539	1582	1774	3539	1583
Grp Volume(v), veh/h	87	0	27	76	0	6	136	1587	49	38	1804	85
Grp Sat Flow(s),veh/h/ln	1387	0	1562	1358	0	1805	1774	1770	1582	1774	1770	1583
Q Serve(g_s), s	9.2	0.0	2.5	9.1	0.0	0.5	12.5	33.5	1.3	3.5	53.3	2.9
Cycle Q Clear(g_c), s	9.7	0.0	2.5	18.8	0.0	0.5	12.5	33.5	1.3	3.5	53.3	2.9
Prop In Lane	0.94		1.00	1.00		0.17	1.00		1.00	1.00		1.00
Lane Grp Cap(c), veh/h	233	0	205	142	0	237	157	2656	1187	49	2440	1091
V/C Ratio(X)	0.37	0.00	0.13	0.54	0.00	0.03	0.86	0.60	0.04	0.78	0.74	0.08
Avail Cap(c_a), veh/h	253	0	227	161	0	263	280	2656	1187	108	2440	1091
HCM Platoon Ratio	1.00	1.00	1.00	1.00	1.00	1.00	1.00	1.00	1.00	1.00	1.00	1.00
Upstream Filter(I)	1.00	0.00	1.00	1.00	0.00	1.00	0.70	0.70	0.70	1.00	1.00	1.00
Uniform Delay (d), s/veh	66.2	0.0	63.4	75.2	0.0	62.5	74.2	9.3	5.3	79.7	16.2	8.4
Incr Delay (d2), s/veh	1.0	0.0	0.3	3.1	0.0	0.0	3.8	0.7	0.0	9.3	2.1	0.1
Initial Q Delay(d3),s/veh	0.0	0.0	0.0	0.0	0.0	0.0	0.0	0.0	0.0	0.0	0.0	0.0
%ile BackOfQ(50%),veh/ln	3.7	0.0	1.1	3.5	0.0	0.2	6.3	16.3	0.6	1.8	26.5	1.3
LnGrp Delay(d),s/veh	67.2	0.0	63.7	78.4	0.0	62.5	78.0	10.0	5.3	89.0	18.3	8.6
LnGrp LOS	E		E	E		E	E	B	A	F	B	A
Approach Vol, veh/h		114			82			1772			1927	
Approach Delay, s/veh		66.4			77.2			15.1			19.3	
Approach LOS		E			E			B			B	

Timer	1	2	3	4	5	6	7	8
Assigned Phs	1	2		4	5	6		8
Phs Duration (G+Y+Rc), s	18.6	119.7		26.6	8.6	129.8		26.6
Change Period (Y+Rc), s	4.0	6.0		5.0	4.0	6.0		5.0
Max Green Setting (Gmax), s	26.0	100.0		24.0	10.0	116.0		24.0
Max Q Clear Time (g_c+I1), s	14.5	55.3		20.8	5.5	35.5		11.7
Green Ext Time (p_c), s	0.2	31.9		0.1	0.0	35.9		0.3

Intersection Summary	
HCM 2010 Ctrl Delay	20.0
HCM 2010 LOS	B

Movement	EBL	EBT	EBR	WBL	WBT	WBR	NBL	NBT	NBR	SBL	SBT	SBR
Lane Configurations												
Traffic Volume (veh/h)	295	5	615	15	0	5	385	1500	10	75	1705	135
Future Volume (veh/h)	295	5	615	15	0	5	385	1500	10	75	1705	135
Number	3	8	18	7	4	14	1	6	16	5	2	12
Initial Q (Qb), veh	0	0	0	0	0	0	0	0	0	0	0	0
Ped-Bike Adj(A_pbT)	1.00		0.99	1.00		0.96	1.00		1.00	1.00		1.00
Parking Bus, Adj	1.00	1.00	1.00	1.00	1.00	1.00	1.00	1.00	1.00	1.00	1.00	1.00
Adj Sat Flow, veh/h/ln	1863	1863	1863	1900	1863	1900	1863	1863	1900	1863	1863	1863
Adj Flow Rate, veh/h	325	0	460	16	0	1	418	1630	11	82	1853	126
Adj No. of Lanes	2	0	2	0	1	0	2	2	0	1	2	1
Peak Hour Factor	0.92	0.92	0.92	0.92	0.92	0.92	0.92	0.92	0.92	0.92	0.92	0.92
Percent Heavy Veh, %	2	2	2	2	2	2	2	2	2	2	2	2
Cap, veh/h	531	0	903	69	0	4	490	2419	16	113	2098	1168
Arrive On Green	0.15	0.00	0.14	0.04	0.00	0.03	0.14	0.67	0.66	0.06	0.59	0.59
Sat Flow, veh/h	3548	0	3123	1653	0	103	3442	3604	24	1774	3539	1583
Grp Volume(v), veh/h	325	0	460	17	0	0	418	800	841	82	1853	126
Grp Sat Flow(s),veh/h/ln	1774	0	1561	1756	0	0	1721	1770	1858	1774	1770	1583
Q Serve(g_s), s	18.6	0.0	26.8	2.0	0.0	0.0	25.8	58.9	59.1	9.9	97.2	4.9
Cycle Q Clear(g_c), s	18.6	0.0	26.8	2.0	0.0	0.0	25.8	58.9	59.1	9.9	97.2	4.9
Prop In Lane	1.00		1.00	0.94		0.06	1.00		0.01	1.00		1.00
Lane Grp Cap(c), veh/h	531	0	903	73	0	0	490	1188	1247	113	2098	1168
V/C Ratio(X)	0.61	0.00	0.51	0.23	0.00	0.00	0.85	0.67	0.67	0.72	0.88	0.11
Avail Cap(c_a), veh/h	555	0	925	251	0	0	919	1580	1659	122	2460	1330
HCM Platoon Ratio	1.00	1.00	1.00	1.00	1.00	1.00	1.00	1.00	1.00	1.00	1.00	1.00
Upstream Filter(I)	1.00	0.00	1.00	1.00	0.00	0.00	1.00	1.00	1.00	1.00	1.00	1.00
Uniform Delay (d), s/veh	86.5	0.0	64.7	100.8	0.0	0.0	91.0	21.4	21.5	99.8	37.8	8.1
Incr Delay (d2), s/veh	1.3	0.0	0.2	0.6	0.0	0.0	1.7	1.0	0.9	14.6	4.0	0.1
Initial Q Delay(d3),s/veh	0.0	0.0	0.0	0.0	0.0	0.0	0.0	0.0	0.0	0.0	0.0	0.0
%ile BackOfQ(50%),veh/ln	9.3	0.0	11.6	1.0	0.0	0.0	12.4	29.0	30.5	5.3	48.5	3.4
LnGrp Delay(d),s/veh	87.8	0.0	64.9	101.4	0.0	0.0	92.7	22.4	22.4	114.5	41.8	8.2
LnGrp LOS	F		E	F			F	C	C	F	D	A
Approach Vol, veh/h		785			17			2059			2061	
Approach Delay, s/veh		74.4			101.4			36.7			42.6	
Approach LOS		E			F			D			D	

Timer	1	2	3	4	5	6	7	8
Assigned Phs	1	2		4	5	6		8
Phs Duration (G+Y+Rc), s	34.9	132.8		13.1	17.9	149.8		36.5
Change Period (Y+Rc), s	6.0	6.0		7.0	6.0	6.0		7.0
Max Green Setting (Gmax), s	56.0	149.0		28.0	13.0	192.0		31.0
Max Q Clear Time (g_c+I1), s	27.8	99.2		4.0	11.9	61.1		28.8
Green Ext Time (p_c), s	1.1	27.6		0.0	0.0	22.6		0.7

Intersection Summary	
HCM 2010 Ctrl Delay	45.4
HCM 2010 LOS	D

Notes

Movement	EBL	EBT	EBR	WBL	WBT	WBR	NBL	NBT	NBR	SBL	SBT	SBR
Lane Configurations												
Traffic Volume (veh/h)	10	0	5	90	5	60	10	1835	90	85	2265	5
Future Volume (veh/h)	10	0	5	90	5	60	10	1835	90	85	2265	5
Number	3	8	18	7	4	14	1	6	16	5	2	12
Initial Q (Qb), veh	0	0	0	0	0	0	0	0	0	0	0	0
Ped-Bike Adj(A_pbT)	1.00		1.00	1.00		1.00	1.00		1.00	1.00		1.00
Parking Bus, Adj	1.00	1.00	1.00	1.00	1.00	1.00	1.00	1.00	1.00	1.00	1.00	1.00
Adj Sat Flow, veh/h/ln	1900	1863	1900	1863	1863	1900	1863	1863	1900	1863	1863	1900
Adj Flow Rate, veh/h	11	0	1	98	5	2	11	1995	96	92	2462	5
Adj No. of Lanes	0	1	0	1	1	0	1	2	0	1	2	0
Peak Hour Factor	0.92	0.92	0.92	0.92	0.92	0.92	0.92	0.92	0.92	0.92	0.92	0.92
Percent Heavy Veh, %	2	2	2	2	2	2	2	2	2	2	2	2
Cap, veh/h	156	2	10	176	110	44	22	2631	126	116	2964	6
Arrive On Green	0.09	0.00	0.08	0.09	0.09	0.08	0.02	1.00	1.00	0.07	0.82	0.81
Sat Flow, veh/h	1244	24	115	1410	1267	507	1774	3439	164	1774	3624	7
Grp Volume(v), veh/h	12	0	0	98	0	7	11	1019	1072	92	1202	1265
Grp Sat Flow(s),veh/h/ln	1384	0	0	1410	0	1773	1774	1770	1834	1774	1770	1861
Q Serve(g_s), s	0.9	0.0	0.0	8.1	0.0	0.5	0.9	0.0	0.0	7.4	55.9	56.0
Cycle Q Clear(g_c), s	1.4	0.0	0.0	9.5	0.0	0.5	0.9	0.0	0.0	7.4	55.9	56.0
Prop In Lane	0.92		0.08	1.00		0.29	1.00		0.09	1.00		0.00
Lane Grp Cap(c), veh/h	168	0	0	176	0	154	22	1354	1403	116	1447	1522
V/C Ratio(X)	0.07	0.00	0.00	0.56	0.00	0.05	0.50	0.75	0.76	0.79	0.83	0.83
Avail Cap(c_a), veh/h	279	0	0	287	0	294	61	1354	1403	184	1447	1522
HCM Platoon Ratio	1.00	1.00	1.00	1.00	1.00	1.00	2.00	2.00	2.00	1.00	1.00	1.00
Upstream Filter(I)	1.00	0.00	0.00	1.00	0.00	1.00	0.60	0.60	0.60	1.00	1.00	1.00
Uniform Delay (d), s/veh	61.2	0.0	0.0	64.6	0.0	60.8	70.3	0.0	0.0	66.8	7.5	7.5
Incr Delay (d2), s/veh	0.2	0.0	0.0	2.7	0.0	0.1	3.9	2.4	2.4	4.7	5.7	5.4
Initial Q Delay(d3),s/veh	0.0	0.0	0.0	0.0	0.0	0.0	0.0	0.0	0.0	0.0	0.0	0.0
%ile BackOfQ(50%),veh/ln	0.5	0.0	0.0	4.0	0.0	0.3	0.5	0.9	0.9	3.8	29.0	30.4
LnGrp Delay(d),s/veh	61.4	0.0	0.0	67.4	0.0	60.9	74.2	2.4	2.4	71.5	13.2	12.9
LnGrp LOS	E			E		E	E	A	A	E	B	B
Approach Vol, veh/h		12			105			2102			2559	
Approach Delay, s/veh		61.4			66.9			2.8			15.1	
Approach LOS		E			E			A			B	

Timer	1	2	3	4	5	6	7	8
Assigned Phs	1	2		4	5	6		8
Phs Duration (G+Y+Rc), s	5.8	122.6		16.6	13.5	114.9		16.6
Change Period (Y+Rc), s	4.0	5.0		5.0	4.0	5.0		5.0
Max Green Setting (Gmax), s	5.0	103.0		23.0	15.0	93.0		23.0
Max Q Clear Time (g_c+I1), s	2.9	58.0		11.5	9.4	2.0		3.4
Green Ext Time (p_c), s	0.0	42.0		0.2	0.1	62.9		0.0

Intersection Summary	
HCM 2010 Ctrl Delay	11.0
HCM 2010 LOS	B

Movement	EBL	EBT	EBR	WBL	WBT	WBR	NBL	NBT	NBR	SBL	SBT	SBR
Lane Configurations												
Traffic Volume (veh/h)	180	15	10	60	5	10	5	1755	20	5	1920	325
Future Volume (veh/h)	180	15	10	60	5	10	5	1755	20	5	1920	325
Number	3	8	18	7	4	14	1	6	16	5	2	12
Initial Q (Qb), veh	0	0	0	0	0	0	0	0	0	0	0	0
Ped-Bike Adj(A_pbT)	1.00		1.00	1.00		1.00	1.00		1.00	1.00		1.00
Parking Bus, Adj	1.00	1.00	1.00	1.00	1.00	1.00	1.00	1.00	1.00	1.00	1.00	1.00
Adj Sat Flow, veh/h/ln	1900	1863	1900	1900	1863	1900	1863	1863	1900	1863	1863	1863
Adj Flow Rate, veh/h	196	16	9	65	5	7	5	1908	21	5	2087	275
Adj No. of Lanes	0	1	0	0	1	0	1	2	0	1	2	1
Peak Hour Factor	0.92	0.92	0.92	0.92	0.92	0.92	0.92	0.92	0.92	0.92	0.92	0.92
Percent Heavy Veh, %	2	2	2	2	2	2	2	2	2	2	2	2
Cap, veh/h	268	18	10	275	22	25	7	2674	29	7	2639	1180
Arrive On Green	0.17	0.17	0.16	0.17	0.17	0.16	0.01	0.99	0.98	0.00	0.75	0.75
Sat Flow, veh/h	1320	108	61	1367	130	150	1774	3586	39	1774	3539	1583
Grp Volume(v), veh/h	221	0	0	77	0	0	5	940	989	5	2087	275
Grp Sat Flow(s),veh/h/ln	1488	0	0	1647	0	0	1774	1770	1856	1774	1770	1583
Q Serve(g_s), s	15.1	0.0	0.0	0.0	0.0	0.0	0.4	2.2	2.3	0.4	53.0	7.8
Cycle Q Clear(g_c), s	20.9	0.0	0.0	5.8	0.0	0.0	0.4	2.2	2.3	0.4	53.0	7.8
Prop In Lane	0.89		0.04	0.84		0.09	1.00		0.02	1.00		1.00
Lane Grp Cap(c), veh/h	297	0	0	322	0	0	7	1319	1384	7	2639	1180
V/C Ratio(X)	0.74	0.00	0.00	0.24	0.00	0.00	0.75	0.71	0.71	0.75	0.79	0.23
Avail Cap(c_a), veh/h	362	0	0	387	0	0	37	1319	1384	37	2639	1180
HCM Platoon Ratio	1.00	1.00	1.00	1.00	1.00	1.00	1.33	1.33	1.33	1.00	1.00	1.00
Upstream Filter(I)	1.00	0.00	0.00	1.00	0.00	0.00	0.61	0.61	0.61	0.40	0.40	0.40
Uniform Delay (d), s/veh	58.6	0.0	0.0	52.6	0.0	0.0	72.1	0.2	0.2	72.2	11.4	5.7
Incr Delay (d2), s/veh	6.5	0.0	0.0	0.4	0.0	0.0	30.7	2.0	2.0	21.5	1.0	0.2
Initial Q Delay(d3),s/veh	0.0	0.0	0.0	0.0	0.0	0.0	0.0	0.0	0.0	0.0	0.0	0.0
%ile BackOfQ(50%),veh/ln	9.2	0.0	0.0	2.7	0.0	0.0	0.3	1.1	1.1	0.2	25.9	3.4
LnGrp Delay(d),s/veh	65.1	0.0	0.0	53.0	0.0	0.0	102.8	2.2	2.1	93.6	12.5	5.9
LnGrp LOS	E			D			F	A	A	F	B	A
Approach Vol, veh/h		221			77			1934			2367	
Approach Delay, s/veh		65.1			53.0			2.4			11.9	
Approach LOS		E			D			A			B	

Timer	1	2	3	4	5	6	7	8
Assigned Phs	1	2		4	5	6		8
Phs Duration (G+Y+Rc), s	4.5	112.1		28.3	4.5	112.1		28.3
Change Period (Y+Rc), s	4.0	5.0		5.0	4.0	5.0		5.0
Max Green Setting (Gmax), s	3.0	98.0		30.0	3.0	98.0		30.0
Max Q Clear Time (g_c+I1), s	2.4	55.0		7.8	2.4	4.3		22.9
Green Ext Time (p_c), s	0.0	40.2		0.2	0.0	70.7		0.5

Intersection Summary	
HCM 2010 Ctrl Delay	11.1
HCM 2010 LOS	B

Movement	EBL	EBT	EBR	WBL	WBT	WBR	NBL	NBT	NBR	SBL	SBT	SBR
Lane Configurations												
Traffic Volume (veh/h)	180	35	45	95	25	20	55	1560	105	25	1855	150
Future Volume (veh/h)	180	35	45	95	25	20	55	1560	105	25	1855	150
Number	3	8	18	7	4	14	1	6	16	5	2	12
Initial Q (Qb), veh	0	0	0	0	0	0	0	0	0	0	0	0
Ped-Bike Adj(A_pbT)	0.98		0.98	0.99		0.97	1.00		1.00	1.00		1.00
Parking Bus, Adj	1.00	1.00	1.00	1.00	1.00	1.00	1.00	1.00	1.00	1.00	1.00	1.00
Adj Sat Flow, veh/h/ln	1900	1863	1863	1863	1863	1900	1863	1863	1900	1863	1863	1900
Adj Flow Rate, veh/h	196	38	10	103	27	2	60	1696	111	27	2016	159
Adj No. of Lanes	0	1	1	1	1	0	1	2	0	1	2	0
Peak Hour Factor	0.92	0.92	0.92	0.92	0.92	0.92	0.92	0.92	0.92	0.92	0.92	0.92
Percent Heavy Veh, %	2	2	2	2	2	2	2	2	2	2	2	2
Cap, veh/h	262	42	304	348	336	25	73	2367	154	34	2260	176
Arrive On Green	0.20	0.20	0.20	0.20	0.20	0.19	0.08	1.00	1.00	0.04	1.00	1.00
Sat Flow, veh/h	1102	214	1545	1347	1710	127	1774	3374	219	1774	3327	259
Grp Volume(v), veh/h	234	0	10	103	0	29	60	883	924	27	1060	1115
Grp Sat Flow(s),veh/h/ln	1316	0	1545	1347	0	1837	1774	1770	1824	1774	1770	1816
Q Serve(g_s), s	23.6	0.0	0.8	0.0	0.0	1.9	4.8	0.0	0.0	2.2	0.0	0.0
Cycle Q Clear(g_c), s	25.5	0.0	0.8	8.3	0.0	1.9	4.8	0.0	0.0	2.2	0.0	0.0
Prop In Lane	0.84		1.00	1.00		0.07	1.00		0.12	1.00		0.14
Lane Grp Cap(c), veh/h	304	0	304	348	0	361	73	1241	1279	34	1202	1234
V/C Ratio(X)	0.77	0.00	0.03	0.30	0.00	0.08	0.82	0.71	0.72	0.79	0.88	0.90
Avail Cap(c_a), veh/h	309	0	309	353	0	367	73	1241	1279	73	1202	1234
HCM Platoon Ratio	1.00	1.00	1.00	1.00	1.00	1.00	2.00	2.00	2.00	2.00	2.00	2.00
Upstream Filter(I)	1.00	0.00	1.00	1.00	0.00	1.00	0.38	0.38	0.38	0.51	0.51	0.51
Uniform Delay (d), s/veh	57.9	0.0	47.1	50.1	0.0	47.6	66.0	0.0	0.0	69.4	0.0	0.0
Incr Delay (d2), s/veh	11.0	0.0	0.0	0.5	0.0	0.1	21.9	1.3	1.4	7.7	5.1	6.1
Initial Q Delay(d3),s/veh	0.0	0.0	0.0	0.0	0.0	0.0	0.0	0.0	0.0	0.0	0.0	0.0
%ile BackOfQ(50%),veh/ln	10.1	0.0	0.3	3.6	0.0	1.0	2.8	0.5	0.5	1.1	1.7	2.1
LnGrp Delay(d),s/veh	68.9	0.0	47.1	50.6	0.0	47.7	87.9	1.3	1.4	77.1	5.1	6.1
LnGrp LOS	E		D	D		D	F	A	A	E	A	A
Approach Vol, veh/h		244			132			1867			2202	
Approach Delay, s/veh		68.0			50.0			4.1			6.5	
Approach LOS		E			D			A			A	

Timer	1	2	3	4	5	6	7	8
Assigned Phs	1	2		4	5	6		8
Phs Duration (G+Y+Rc), s	10.0	102.5		32.5	6.8	105.7		32.5
Change Period (Y+Rc), s	4.0	5.0		5.0	4.0	5.0		5.0
Max Green Setting (Gmax), s	6.0	97.0		28.0	6.0	97.0		28.0
Max Q Clear Time (g_c+I1), s	3.8	2.0		10.3	4.2	2.0		27.5
Green Ext Time (p_c), s	0.0	67.5		0.4	0.0	45.2		0.1

Intersection Summary	
HCM 2010 Ctrl Delay	10.2
HCM 2010 LOS	B

Notes

Movement	EBL	EBT	EBR	WBL	WBT	WBR	NBL	NBT	NBR	SBL	SBT	SBR
Lane Configurations												
Traffic Volume (veh/h)	60	185	60	125	110	705	55	950	195	630	1230	65
Future Volume (veh/h)	60	185	60	125	110	705	55	950	195	630	1230	65
Number	7	4	14	3	8	18	1	6	16	5	2	12
Initial Q (Qb), veh	0	0	0	0	0	0	0	0	0	0	0	0
Ped-Bike Adj(A_pbT)	0.99		0.98	1.00		0.98	1.00		0.99	1.00		0.99
Parking Bus, Adj	1.00	1.00	1.00	1.00	1.00	1.00	1.00	1.00	1.00	1.00	1.00	1.00
Adj Sat Flow, veh/h/ln	1900	1863	1863	1863	1863	1863	1863	1863	1863	1863	1863	1900
Adj Flow Rate, veh/h	65	201	12	136	120	445	60	1033	135	685	1337	69
Adj No. of Lanes	0	1	1	1	1	1	1	2	1	2	2	0
Peak Hour Factor	0.92	0.92	0.92	0.92	0.92	0.92	0.92	0.92	0.92	0.92	0.92	0.92
Percent Heavy Veh, %	2	2	2	2	2	2	2	2	2	2	2	2
Cap, veh/h	100	256	341	219	578	483	77	1400	622	727	1930	99
Arrive On Green	0.22	0.22	0.22	0.06	0.31	0.31	0.04	0.40	0.40	0.42	1.00	1.00
Sat Flow, veh/h	313	1163	1545	1774	1863	1556	1774	3539	1571	3442	3424	176
Grp Volume(v), veh/h	266	0	12	136	120	445	60	1033	135	685	690	716
Grp Sat Flow(s),veh/h/ln	1476	0	1545	1774	1863	1556	1774	1770	1571	1721	1770	1830
Q Serve(g_s), s	21.2	0.0	0.9	8.5	6.9	40.1	4.9	36.1	8.2	27.7	0.0	0.0
Cycle Q Clear(g_c), s	24.6	0.0	0.9	8.5	6.9	40.1	4.9	36.1	8.2	27.7	0.0	0.0
Prop In Lane	0.24		1.00	1.00		1.00	1.00		1.00	1.00		0.10
Lane Grp Cap(c), veh/h	356	0	341	219	578	483	77	1400	622	727	998	1032
V/C Ratio(X)	0.75	0.00	0.04	0.62	0.21	0.92	0.78	0.74	0.22	0.94	0.69	0.69
Avail Cap(c_a), veh/h	426	0	415	219	668	558	110	1400	622	807	998	1032
HCM Platoon Ratio	1.00	1.00	1.00	1.00	1.00	1.00	1.00	1.00	1.00	2.00	2.00	2.00
Upstream Filter(I)	1.00	0.00	1.00	1.00	1.00	1.00	0.88	0.88	0.88	0.32	0.32	0.32
Uniform Delay (d), s/veh	53.2	0.0	44.4	41.6	36.9	48.3	68.7	37.4	29.0	41.0	0.0	0.0
Incr Delay (d2), s/veh	5.8	0.0	0.0	5.3	0.2	19.4	11.0	3.1	0.7	7.3	1.3	1.3
Initial Q Delay(d3),s/veh	0.0	0.0	0.0	0.0	0.0	0.0	0.0	0.0	0.0	0.0	0.0	0.0
%ile BackOfQ(50%),veh/ln	10.7	0.0	0.4	4.4	3.6	19.8	2.6	18.3	3.7	13.8	0.4	0.4
LnGrp Delay(d),s/veh	59.0	0.0	44.4	46.9	37.0	67.7	79.7	40.5	29.7	48.3	1.3	1.3
LnGrp LOS	E		D	D	D	E	E	D	C	D	A	A
Approach Vol, veh/h		278			701			1228			2091	
Approach Delay, s/veh		58.4			58.4			41.2			16.7	
Approach LOS		E			E			D			B	

Timer	1	2	3	4	5	6	7	8
Assigned Phs	1	2	3	4	5	6		8
Phs Duration (G+Y+Rc), s	10.3	85.8	13.0	36.0	34.6	61.4		49.0
Change Period (Y+Rc), s	4.0	5.0	5.0	5.0	4.0	5.0		5.0
Max Green Setting (Gmax), s	9.0	71.0	8.0	38.0	34.0	46.0		51.0
Max Q Clear Time (g_c+I1), s	6.9	2.0	10.5	26.6	29.7	38.1		42.1
Green Ext Time (p_c), s	0.0	24.6	0.0	1.0	1.0	5.5		1.9

Intersection Summary	
HCM 2010 Ctrl Delay	33.2
HCM 2010 LOS	C

Notes

Intersection	
Int Delay, s/veh	0

Movement	WBL	WBR	NBT	NBR	SBL	SBT
Lane Configurations						
Traffic Vol, veh/h	0	0	895	0	0	790
Future Vol, veh/h	0	0	895	0	0	790
Conflicting Peds, #/hr	0	0	0	0	0	0
Sign Control	Stop	Stop	Free	Free	Free	Free
RT Channelized	-	None	-	None	-	None
Storage Length	-	0	-	0	-	-
Veh in Median Storage, #	0	-	0	-	-	0
Grade, %	0	-	0	-	-	0
Peak Hour Factor	92	92	92	92	92	92
Heavy Vehicles, %	2	2	2	2	2	2
Mvmt Flow	0	0	973	0	0	859

Major/Minor	Minor1		Major1		Major2	
Conflicting Flow All	-	973	0	0	-	-
Stage 1	-	-	-	-	-	-
Stage 2	-	-	-	-	-	-
Critical Hdwy	-	6.22	-	-	-	-
Critical Hdwy Stg 1	-	-	-	-	-	-
Critical Hdwy Stg 2	-	-	-	-	-	-
Follow-up Hdwy	-	3.318	-	-	-	-
Pot Cap-1 Maneuver	0	306	-	-	0	-
Stage 1	0	-	-	-	0	-
Stage 2	0	-	-	-	0	-
Platoon blocked, %			-	-		-
Mov Cap-1 Maneuver	-	306	-	-	-	-
Mov Cap-2 Maneuver	-	-	-	-	-	-
Stage 1	-	-	-	-	-	-
Stage 2	-	-	-	-	-	-

Approach	WB	NB	SB
HCM Control Delay, s	0	0	0
HCM LOS	A		

Minor Lane/Major Mvmt	NBT	NBR	WBLn1	SBT
Capacity (veh/h)	-	-	-	-
HCM Lane V/C Ratio	-	-	-	-
HCM Control Delay (s)	-	-	0	-
HCM Lane LOS	-	-	A	-
HCM 95th %tile Q(veh)	-	-	-	-

Intersection	
Int Delay, s/veh	0

Movement	WBL	WBR	NBT	NBR	SBL	SBT
Lane Configurations						
Traffic Vol, veh/h	0	0	1005	0	0	890
Future Vol, veh/h	0	0	1005	0	0	890
Conflicting Peds, #/hr	0	0	0	0	0	0
Sign Control	Stop	Stop	Free	Free	Free	Free
RT Channelized	-	None	-	None	-	None
Storage Length	0	100	-	100	100	-
Veh in Median Storage, #	0	-	0	-	-	0
Grade, %	0	-	0	-	-	0
Peak Hour Factor	92	92	92	92	92	92
Heavy Vehicles, %	2	2	2	2	2	2
Mvmt Flow	0	0	1092	0	0	967

Major/Minor	Minor1		Major1		Major2	
Conflicting Flow All	2059	1092	0	0	1092	0
Stage 1	1092	-	-	-	-	-
Stage 2	967	-	-	-	-	-
Critical Hdwy	6.42	6.22	-	-	4.12	-
Critical Hdwy Stg 1	5.42	-	-	-	-	-
Critical Hdwy Stg 2	5.42	-	-	-	-	-
Follow-up Hdwy	3.518	3.318	-	-	2.218	-
Pot Cap-1 Maneuver	60	261	-	-	639	-
Stage 1	322	-	-	-	-	-
Stage 2	369	-	-	-	-	-
Platoon blocked, %			-	-		-
Mov Cap-1 Maneuver	60	261	-	-	639	-
Mov Cap-2 Maneuver	184	-	-	-	-	-
Stage 1	322	-	-	-	-	-
Stage 2	369	-	-	-	-	-

Approach	WB	NB	SB
HCM Control Delay, s	0	0	0
HCM LOS	A		

Minor Lane/Major Mvmt	NBT	NBR	WBLn1	WBLn2	SBL	SBT
Capacity (veh/h)	-	-	-	-	639	-
HCM Lane V/C Ratio	-	-	-	-	-	-
HCM Control Delay (s)	-	-	0	0	0	-
HCM Lane LOS	-	-	A	A	A	-
HCM 95th %tile Q(veh)	-	-	-	-	0	-

Intersection	
Int Delay, s/veh	3.2

Movement	EBL	EBT	EBR	WBL	WBT	WBR	NBL	NBT	NBR	SBL	SBT	SBR
Lane Configurations												
Traffic Vol, veh/h	25	60	15	5	45	5	10	5	5	5	5	15
Future Vol, veh/h	25	60	15	5	45	5	10	5	5	5	5	15
Conflicting Peds, #/hr	0	0	0	0	0	0	0	0	0	0	0	0
Sign Control	Free	Free	Free	Free	Free	Free	Stop	Stop	Stop	Stop	Stop	Stop
RT Channelized	-	-	None	-	-	None	-	-	None	-	-	None
Storage Length	100	-	-	100	-	-	-	-	-	-	-	-
Veh in Median Storage, #	-	0	-	-	0	-	-	0	-	-	0	-
Grade, %	-	0	-	-	0	-	-	0	-	-	0	-
Peak Hour Factor	92	92	92	92	92	92	92	92	92	92	92	92
Heavy Vehicles, %	2	2	2	2	2	2	2	2	2	2	2	2
Mvmt Flow	27	65	16	5	49	5	11	5	5	5	5	16

Major/Minor	Major1			Major2			Minor1			Minor2		
Conflicting Flow All	54	0	0	81	0	0	199	191	73	194	197	52
Stage 1	-	-	-	-	-	-	127	127	-	62	62	-
Stage 2	-	-	-	-	-	-	72	64	-	132	135	-
Critical Hdwy	4.12	-	-	4.12	-	-	7.12	6.52	6.22	7.12	6.52	6.22
Critical Hdwy Stg 1	-	-	-	-	-	-	6.12	5.52	-	6.12	5.52	-
Critical Hdwy Stg 2	-	-	-	-	-	-	6.12	5.52	-	6.12	5.52	-
Follow-up Hdwy	2.218	-	-	2.218	-	-	3.518	4.018	3.318	3.518	4.018	3.318
Pot Cap-1 Maneuver	1551	-	-	1517	-	-	760	704	989	765	699	1016
Stage 1	-	-	-	-	-	-	877	791	-	949	843	-
Stage 2	-	-	-	-	-	-	938	842	-	871	785	-
Platoon blocked, %		-	-		-	-						
Mov Cap-1 Maneuver	1551	-	-	1517	-	-	732	690	989	744	685	1016
Mov Cap-2 Maneuver	-	-	-	-	-	-	732	690	-	744	685	-
Stage 1	-	-	-	-	-	-	862	778	-	933	840	-
Stage 2	-	-	-	-	-	-	914	839	-	845	772	-

Approach	EB	WB	NB	SB
HCM Control Delay, s	1.8	0.7	9.8	9.3
HCM LOS			A	A

Minor Lane/Major Mvmt	NBLn1	EBL	EBT	EBR	WBL	WBT	WBR	SBLn1
Capacity (veh/h)	770	1551	-	-	1517	-	-	869
HCM Lane V/C Ratio	0.028	0.018	-	-	0.004	-	-	0.031
HCM Control Delay (s)	9.8	7.4	-	-	7.4	-	-	9.3
HCM Lane LOS	A	A	-	-	A	-	-	A
HCM 95th %tile Q(veh)	0.1	0.1	-	-	0	-	-	0.1

Intersection	
Int Delay, s/veh	4.2

Movement	EBL	EBT	EBR	WBL	WBT	WBR	NBL	NBT	NBR	SBL	SBT	SBR
Lane Configurations												
Traffic Vol, veh/h	15	15	35	5	20	5	20	5	5	5	5	10
Future Vol, veh/h	15	15	35	5	20	5	20	5	5	5	5	10
Conflicting Peds, #/hr	0	0	0	0	0	0	0	0	0	0	0	0
Sign Control	Free	Free	Free	Free	Free	Free	Stop	Stop	Stop	Stop	Stop	Stop
RT Channelized	-	-	None	-	-	None	-	-	None	-	-	None
Storage Length	-	-	-	-	-	-	-	-	-	-	-	-
Veh in Median Storage, #	-	0	-	-	0	-	-	0	-	-	0	-
Grade, %	-	0	-	-	0	-	-	0	-	-	0	-
Peak Hour Factor	92	92	92	92	92	92	92	92	92	92	92	92
Heavy Vehicles, %	2	2	2	2	2	2	2	2	2	2	2	2
Mvmt Flow	16	16	38	5	22	5	22	5	5	5	5	11

Major/Minor	Major1			Major2			Minor1			Minor2		
Conflicting Flow All	27	0	0	54	0	0	110	104	35	107	121	25
Stage 1	-	-	-	-	-	-	67	67	-	35	35	-
Stage 2	-	-	-	-	-	-	43	37	-	72	86	-
Critical Hdwy	4.12	-	-	4.12	-	-	7.12	6.52	6.22	7.12	6.52	6.22
Critical Hdwy Stg 1	-	-	-	-	-	-	6.12	5.52	-	6.12	5.52	-
Critical Hdwy Stg 2	-	-	-	-	-	-	6.12	5.52	-	6.12	5.52	-
Follow-up Hdwy	2.218	-	-	2.218	-	-	3.518	4.018	3.318	3.518	4.018	3.318
Pot Cap-1 Maneuver	1587	-	-	1551	-	-	868	786	1038	872	769	1051
Stage 1	-	-	-	-	-	-	943	839	-	981	866	-
Stage 2	-	-	-	-	-	-	971	864	-	938	824	-
Platoon blocked, %		-	-		-	-						
Mov Cap-1 Maneuver	1587	-	-	1551	-	-	846	776	1038	855	759	1051
Mov Cap-2 Maneuver	-	-	-	-	-	-	846	776	-	855	759	-
Stage 1	-	-	-	-	-	-	934	831	-	971	863	-
Stage 2	-	-	-	-	-	-	952	861	-	918	816	-

Approach	EB	WB	NB	SB
HCM Control Delay, s	1.7	1.2	9.4	9
HCM LOS			A	A

Minor Lane/Major Mvmt	NBLn1	EBL	EBT	EBR	WBL	WBT	WBR	SBLn1
Capacity (veh/h)	860	1587	-	-	1551	-	-	911
HCM Lane V/C Ratio	0.038	0.01	-	-	0.004	-	-	0.024
HCM Control Delay (s)	9.4	7.3	0	-	7.3	0	-	9
HCM Lane LOS	A	A	A	-	A	A	-	A
HCM 95th %tile Q(veh)	0.1	0	-	-	0	-	-	0.1

APPENDIX C

LEVEL OF SERVICE CALCULATIONS

- Future Year 2022 Scenario 1 WE Peak

Movement	EBL	EBT	EBR	WBL	WBT	WBR	NBL	NBT	NBR	SBL	SBT	SBR
Lane Configurations												
Traffic Volume (veh/h)	40	45	335	45	50	20	275	315	40	20	285	90
Future Volume (veh/h)	40	45	335	45	50	20	275	315	40	20	285	90
Number	7	4	14	3	8	18	5	2	12	1	6	16
Initial Q (Qb), veh	0	0	0	0	0	0	0	0	0	0	0	0
Ped-Bike Adj(A_pbT)	0.99		0.99	0.99		0.99	1.00		1.00	1.00		1.00
Parking Bus, Adj	1.00	1.00	1.00	1.00	1.00	1.00	1.00	1.00	1.00	1.00	1.00	1.00
Adj Sat Flow, veh/h/ln	1900	1863	1863	1863	1863	1900	1863	1863	1863	1863	1863	1863
Adj Flow Rate, veh/h	43	49	35	49	54	10	299	342	23	22	310	28
Adj No. of Lanes	0	1	1	1	1	0	1	1	1	1	1	1
Peak Hour Factor	0.92	0.92	0.92	0.92	0.92	0.92	0.92	0.92	0.92	0.92	0.92	0.92
Percent Heavy Veh, %	2	2	2	2	2	2	2	2	2	2	2	2
Cap, veh/h	191	134	202	263	197	36	386	916	777	29	541	459
Arrive On Green	0.13	0.13	0.13	0.13	0.13	0.13	0.22	0.49	0.49	0.02	0.29	0.29
Sat Flow, veh/h	549	1038	1566	1298	1526	283	1774	1863	1580	1774	1863	1581
Grp Volume(v), veh/h	92	0	35	49	0	64	299	342	23	22	310	28
Grp Sat Flow(s),veh/h/ln	1587	0	1566	1298	0	1809	1774	1863	1580	1774	1863	1581
Q Serve(g_s), s	0.9	0.0	0.9	1.6	0.0	1.4	7.0	5.0	0.3	0.5	6.2	0.6
Cycle Q Clear(g_c), s	2.3	0.0	0.9	3.9	0.0	1.4	7.0	5.0	0.3	0.5	6.2	0.6
Prop In Lane	0.47		1.00	1.00		0.16	1.00		1.00	1.00		1.00
Lane Grp Cap(c), veh/h	325	0	202	263	0	233	386	916	777	29	541	459
V/C Ratio(X)	0.28	0.00	0.17	0.19	0.00	0.27	0.78	0.37	0.03	0.77	0.57	0.06
Avail Cap(c_a), veh/h	974	0	853	802	0	985	1208	3340	2833	604	2705	2296
HCM Platoon Ratio	1.00	1.00	1.00	1.00	1.00	1.00	1.00	1.00	1.00	1.00	1.00	1.00
Upstream Filter(I)	1.00	0.00	1.00	1.00	0.00	1.00	1.00	1.00	1.00	1.00	1.00	1.00
Uniform Delay (d), s/veh	17.7	0.0	17.1	19.5	0.0	17.3	16.2	7.0	5.8	21.6	13.3	11.3
Incr Delay (d2), s/veh	0.5	0.0	0.4	0.3	0.0	0.6	3.4	0.5	0.0	34.5	2.0	0.1
Initial Q Delay(d3),s/veh	0.0	0.0	0.0	0.0	0.0	0.0	0.0	0.0	0.0	0.0	0.0	0.0
%ile BackOfQ(50%),veh/ln	1.1	0.0	0.4	0.6	0.0	0.7	3.8	2.7	0.1	0.5	3.5	0.3
LnGrp Delay(d),s/veh	18.1	0.0	17.5	19.9	0.0	18.0	19.6	7.5	5.8	56.1	15.3	11.4
LnGrp LOS	B		B	B		B	B	A	A	E	B	B
Approach Vol, veh/h		127			113			664			360	
Approach Delay, s/veh		18.0			18.8			12.9			17.5	
Approach LOS		B			B			B			B	

Timer	1	2	3	4	5	6	7	8
Assigned Phs	1	2		4	5	6		8
Phs Duration (G+Y+Rc), s	5.7	27.7		10.7	14.6	18.8		10.7
Change Period (Y+Rc), s	5.0	6.0		5.0	5.0	6.0		5.0
Max Green Setting (Gmax), s	15.0	79.0		24.0	30.0	64.0		24.0
Max Q Clear Time (g_c+I1), s	2.5	7.0		4.3	9.0	8.2		5.9
Green Ext Time (p_c), s	0.0	4.9		0.5	0.8	4.3		0.4

Intersection Summary	
HCM 2010 Ctrl Delay	15.2
HCM 2010 LOS	B

Movement	EBL	EBT	EBR	WBL	WBT	WBR	NBL	NBT	NBR	SBL	SBT	SBR
Lane Configurations												
Traffic Volume (veh/h)	55	20	200	40	15	5	135	460	25	15	495	60
Future Volume (veh/h)	55	20	200	40	15	5	135	460	25	15	495	60
Number	7	4	14	3	8	18	5	2	12	1	6	16
Initial Q (Qb), veh	0	0	0	0	0	0	0	0	0	0	0	0
Ped-Bike Adj(A_pbT)	0.98		0.98	0.99		0.98	1.00		1.00	1.00		1.00
Parking Bus, Adj	1.00	1.00	1.00	1.00	1.00	1.00	1.00	1.00	1.00	1.00	1.00	1.00
Adj Sat Flow, veh/h/ln	1900	1863	1863	1863	1863	1900	1863	1863	1863	1863	1863	1863
Adj Flow Rate, veh/h	60	22	24	43	16	1	147	500	0	16	538	25
Adj No. of Lanes	0	1	1	1	1	0	1	1	1	1	1	1
Peak Hour Factor	0.92	0.92	0.92	0.92	0.92	0.92	0.92	0.92	0.92	0.92	0.92	0.92
Percent Heavy Veh, %	2	2	2	2	2	2	2	2	2	2	2	2
Cap, veh/h	288	84	231	307	257	16	439	863	733	429	731	619
Arrive On Green	0.15	0.15	0.15	0.15	0.15	0.15	0.08	0.46	0.00	0.01	0.39	0.39
Sat Flow, veh/h	955	563	1557	1336	1733	108	1774	1863	1583	1774	1863	1577
Grp Volume(v), veh/h	82	0	24	43	0	17	147	500	0	16	538	25
Grp Sat Flow(s),veh/h/ln	1518	0	1557	1336	0	1841	1774	1863	1583	1774	1863	1577
Q Serve(g_s), s	1.2	0.0	0.6	1.3	0.0	0.3	2.0	8.4	0.0	0.2	10.5	0.4
Cycle Q Clear(g_c), s	1.9	0.0	0.6	3.2	0.0	0.3	2.0	8.4	0.0	0.2	10.5	0.4
Prop In Lane	0.73		1.00	1.00		0.06	1.00		1.00	1.00		1.00
Lane Grp Cap(c), veh/h	372	0	231	307	0	273	439	863	733	429	731	619
V/C Ratio(X)	0.22	0.00	0.10	0.14	0.00	0.06	0.33	0.58	0.00	0.04	0.74	0.04
Avail Cap(c_a), veh/h	1019	0	915	894	0	1082	918	2234	1899	1033	2234	1891
HCM Platoon Ratio	1.00	1.00	1.00	1.00	1.00	1.00	1.00	1.00	1.00	1.00	1.00	1.00
Upstream Filter(I)	1.00	0.00	1.00	1.00	0.00	1.00	1.00	1.00	0.00	1.00	1.00	1.00
Uniform Delay (d), s/veh	16.2	0.0	15.7	17.7	0.0	15.6	7.9	8.4	0.0	8.0	11.0	8.0
Incr Delay (d2), s/veh	0.3	0.0	0.2	0.2	0.0	0.1	0.4	0.6	0.0	0.0	1.5	0.0
Initial Q Delay(d3),s/veh	0.0	0.0	0.0	0.0	0.0	0.0	0.0	0.0	0.0	0.0	0.0	0.0
%ile BackOfQ(50%),veh/ln	0.9	0.0	0.3	0.5	0.0	0.2	1.0	4.3	0.0	0.1	5.7	0.2
LnGrp Delay(d),s/veh	16.5	0.0	15.9	17.9	0.0	15.7	8.4	9.0	0.0	8.0	12.5	8.0
LnGrp LOS	B		B	B		B	A	A		A	B	A
Approach Vol, veh/h		106			60			647			579	
Approach Delay, s/veh		16.3			17.3			8.9			12.2	
Approach LOS		B			B			A			B	

Timer	1	2	3	4	5	6	7	8
Assigned Phs	1	2		4	5	6		8
Phs Duration (G+Y+Rc), s	5.5	25.7		11.3	8.5	22.7		11.3
Change Period (Y+Rc), s	5.0	6.0		5.0	5.0	6.0		5.0
Max Green Setting (Gmax), s	15.0	51.0		25.0	15.0	51.0		25.0
Max Q Clear Time (g_c+I1), s	2.3	10.4		3.9	4.0	12.5		5.2
Green Ext Time (p_c), s	0.0	3.4		0.4	0.3	3.9		0.1

Intersection Summary	
HCM 2010 Ctrl Delay	11.2
HCM 2010 LOS	B

Movement	EBL	EBT	EBR	WBL	WBT	WBR	NBL	NBT	NBR	SBL	SBT	SBR
Lane Configurations												
Traffic Volume (veh/h)	40	15	85	35	15	30	80	550	45	25	675	50
Future Volume (veh/h)	40	15	85	35	15	30	80	550	45	25	675	50
Number	7	4	14	3	8	18	5	2	12	1	6	16
Initial Q (Qb), veh	0	0	0	0	0	0	0	0	0	0	0	0
Ped-Bike Adj(A_pbT)	1.00		0.99	1.00		1.00	1.00		1.00	1.00		1.00
Parking Bus, Adj	1.00	1.00	1.00	1.00	1.00	1.00	1.00	1.00	1.00	1.00	1.00	1.00
Adj Sat Flow, veh/h/ln	1863	1863	1900	1863	1863	1863	1863	1863	1863	1863	1863	1863
Adj Flow Rate, veh/h	43	16	4	38	16	1	87	598	27	27	734	26
Adj No. of Lanes	1	1	0	1	1	1	1	1	1	1	1	1
Peak Hour Factor	0.92	0.92	0.92	0.92	0.92	0.92	0.92	0.92	0.92	0.92	0.92	0.92
Percent Heavy Veh, %	2	2	2	2	2	2	2	2	2	2	2	2
Cap, veh/h	59	177	44	54	224	191	115	963	818	32	875	743
Arrive On Green	0.03	0.12	0.12	0.03	0.12	0.12	0.06	0.52	0.52	0.02	0.47	0.47
Sat Flow, veh/h	1774	1436	359	1774	1863	1583	1774	1863	1583	1774	1863	1582
Grp Volume(v), veh/h	43	0	20	38	16	1	87	598	27	27	734	26
Grp Sat Flow(s),veh/h/ln	1774	0	1795	1774	1863	1583	1774	1863	1583	1774	1863	1582
Q Serve(g_s), s	1.5	0.0	0.6	1.4	0.5	0.0	3.1	14.7	0.5	1.0	22.1	0.6
Cycle Q Clear(g_c), s	1.5	0.0	0.6	1.4	0.5	0.0	3.1	14.7	0.5	1.0	22.1	0.6
Prop In Lane	1.00		0.20	1.00		1.00	1.00		1.00	1.00		1.00
Lane Grp Cap(c), veh/h	59	0	221	54	224	191	115	963	818	32	875	743
V/C Ratio(X)	0.73	0.00	0.09	0.70	0.07	0.01	0.76	0.62	0.03	0.85	0.84	0.03
Avail Cap(c_a), veh/h	553	0	587	553	609	518	691	1886	1603	691	1886	1601
HCM Platoon Ratio	1.00	1.00	1.00	1.00	1.00	1.00	1.00	1.00	1.00	1.00	1.00	1.00
Upstream Filter(I)	1.00	0.00	1.00	1.00	1.00	1.00	1.00	1.00	1.00	1.00	1.00	1.00
Uniform Delay (d), s/veh	30.7	0.0	25.0	30.8	25.1	24.9	29.5	11.0	7.6	31.4	14.9	9.2
Incr Delay (d2), s/veh	15.5	0.0	0.2	14.9	0.1	0.0	9.7	0.7	0.0	42.5	2.2	0.0
Initial Q Delay(d3),s/veh	0.0	0.0	0.0	0.0	0.0	0.0	0.0	0.0	0.0	0.0	0.0	0.0
%ile BackOfQ(50%),veh/ln	1.0	0.0	0.3	0.9	0.3	0.0	1.8	7.7	0.2	0.8	11.8	0.2
LnGrp Delay(d),s/veh	46.2	0.0	25.1	45.7	25.2	24.9	39.3	11.7	7.6	73.9	17.1	9.2
LnGrp LOS	D		C	D	C	C	D	B	A	E	B	A
Approach Vol, veh/h		63			55			712			787	
Approach Delay, s/veh		39.5			39.4			14.9			18.8	
Approach LOS		D			D			B			B	

Timer	1	2	3	4	5	6	7	8
Assigned Phs	1	2	3	4	5	6	7	8
Phs Duration (G+Y+Rc), s	6.2	38.2	7.0	12.9	9.2	35.2	7.1	12.7
Change Period (Y+Rc), s	5.0	5.0	5.0	5.0	5.0	5.0	5.0	5.0
Max Green Setting (Gmax), s	25.0	65.0	20.0	21.0	25.0	65.0	20.0	21.0
Max Q Clear Time (g_c+I1), s	3.0	16.7	3.4	2.6	5.1	24.1	3.5	2.5
Green Ext Time (p_c), s	0.0	4.5	0.0	0.0	0.2	6.0	0.1	0.0

Intersection Summary	
HCM 2010 Ctrl Delay	18.6
HCM 2010 LOS	B

Movement	EBL	EBT	EBR	WBL	WBT	WBR	NBL	NBT	NBR	SBL	SBT	SBR
Lane Configurations												
Traffic Volume (veh/h)	55	10	595	10	0	5	410	625	5	0	750	55
Future Volume (veh/h)	55	10	595	10	0	5	410	625	5	0	750	55
Number	3	8	18	7	4	14	1	6	16	5	2	12
Initial Q (Qb), veh	0	0	0	0	0	0	0	0	0	0	0	0
Ped-Bike Adj(A_pbT)	1.00		1.00	1.00		1.00	1.00		1.00	1.00		1.00
Parking Bus, Adj	1.00	1.00	1.00	1.00	1.00	1.00	1.00	1.00	1.00	1.00	1.00	1.00
Adj Sat Flow, veh/h/ln	1900	1863	1863	1900	1863	1900	1863	1863	1900	1863	1863	1863
Adj Flow Rate, veh/h	60	11	0	11	0	1	446	679	5	0	815	19
Adj No. of Lanes	0	1	1	0	1	0	1	2	0	1	2	1
Peak Hour Factor	0.92	0.92	0.92	0.92	0.92	0.92	0.92	0.92	0.92	0.92	0.92	0.92
Percent Heavy Veh, %	2	2	2	2	2	2	2	2	2	2	2	2
Cap, veh/h	192	15	100	207	4	9	515	2700	20	3	1386	618
Arrive On Green	0.08	0.06	0.00	0.08	0.00	0.06	0.29	0.75	0.75	0.00	0.39	0.39
Sat Flow, veh/h	1255	230	1583	1424	65	135	1774	3601	27	1774	3539	1577
Grp Volume(v), veh/h	71	0	0	12	0	0	446	334	350	0	815	19
Grp Sat Flow(s),veh/h/ln	1486	0	1583	1624	0	0	1774	1770	1858	1774	1770	1577
Q Serve(g_s), s	2.3	0.0	0.0	0.0	0.0	0.0	14.0	3.4	3.4	0.0	10.7	0.4
Cycle Q Clear(g_c), s	2.7	0.0	0.0	0.4	0.0	0.0	14.0	3.4	3.4	0.0	10.7	0.4
Prop In Lane	0.85		1.00	0.92		0.08	1.00		0.01	1.00		1.00
Lane Grp Cap(c), veh/h	232	0	100	248	0	0	515	1327	1393	3	1386	618
V/C Ratio(X)	0.31	0.00	0.00	0.05	0.00	0.00	0.87	0.25	0.25	0.00	0.59	0.03
Avail Cap(c_a), veh/h	886	0	808	807	0	0	2143	1716	1802	2143	3432	1530
HCM Platoon Ratio	1.00	1.00	1.00	1.00	1.00	1.00	1.00	1.00	1.00	1.00	1.00	1.00
Upstream Filter(I)	1.00	0.00	0.00	1.00	0.00	0.00	1.00	1.00	1.00	0.00	1.00	1.00
Uniform Delay (d), s/veh	26.6	0.0	0.0	25.5	0.0	0.0	19.8	2.3	2.3	0.0	14.1	11.0
Incr Delay (d2), s/veh	0.7	0.0	0.0	0.1	0.0	0.0	1.8	0.2	0.2	0.0	0.9	0.0
Initial Q Delay(d3),s/veh	0.0	0.0	0.0	0.0	0.0	0.0	0.0	0.0	0.0	0.0	0.0	0.0
%ile BackOfQ(50%),veh/ln	1.1	0.0	0.0	0.2	0.0	0.0	7.1	1.7	1.8	0.0	5.4	0.2
LnGrp Delay(d),s/veh	27.3	0.0	0.0	25.6	0.0	0.0	21.6	2.5	2.5	0.0	15.0	11.1
LnGrp LOS	C			C			C	A	A		B	B
Approach Vol, veh/h		71			12			1130			834	
Approach Delay, s/veh		27.3			25.6			10.0			14.9	
Approach LOS		C			C			B			B	

Timer	1	2	3	4	5	6	7	8
Assigned Phs	1	2		4	5	6		8
Phs Duration (G+Y+Rc), s	21.0	29.0		8.7	0.0	50.1		8.7
Change Period (Y+Rc), s	4.0	6.0		5.0	4.0	6.0		5.0
Max Green Setting (Gmax), s	17.0	57.0		27.0	71.0	57.0		30.0
Max Q Clear Time (g_c+I1), s	16.0	12.7		2.4	0.0	5.4		4.7
Green Ext Time (p_c), s	1.0	10.3		0.0	0.0	7.3		0.2

Intersection Summary	
HCM 2010 Ctrl Delay	12.7
HCM 2010 LOS	B

Movement	EBL	EBT	EBR	WBL	WBT	WBR	NBL	NBT	NBR	SBL	SBT	SBR
Lane Configurations												
Traffic Volume (veh/h)	60	5	145	15	5	15	105	980	20	10	1315	65
Future Volume (veh/h)	60	5	145	15	5	15	105	980	20	10	1315	65
Number	3	8	18	7	4	14	1	6	16	5	2	12
Initial Q (Qb), veh	0	0	0	0	0	0	0	0	0	0	0	0
Ped-Bike Adj(A_pbT)	0.98		0.98	0.98		0.98	1.00		1.00	1.00		1.00
Parking Bus, Adj	1.00	1.00	1.00	1.00	1.00	1.00	1.00	1.00	1.00	1.00	1.00	1.00
Adj Sat Flow, veh/h/ln	1900	1863	1863	1900	1863	1900	1863	1863	1900	1863	1863	1863
Adj Flow Rate, veh/h	65	5	7	16	5	1	114	1065	21	11	1429	42
Adj No. of Lanes	0	1	1	0	1	0	1	2	0	1	2	1
Peak Hour Factor	0.92	0.92	0.92	0.92	0.92	0.92	0.92	0.92	0.92	0.92	0.92	0.92
Percent Heavy Veh, %	2	2	2	2	2	2	2	2	2	2	2	2
Cap, veh/h	224	13	143	150	36	5	146	2508	49	15	2238	999
Arrive On Green	0.11	0.09	0.09	0.11	0.09	0.09	0.08	0.71	0.71	0.01	0.63	0.63
Sat Flow, veh/h	1390	144	1547	695	388	52	1774	3550	70	1774	3539	1580
Grp Volume(v), veh/h	70	0	7	22	0	0	114	531	555	11	1429	42
Grp Sat Flow(s),veh/h/ln	1534	0	1547	1134	0	0	1774	1770	1850	1774	1770	1580
Q Serve(g_s), s	0.0	0.0	0.3	0.1	0.0	0.0	4.6	9.1	9.1	0.4	18.1	0.7
Cycle Q Clear(g_c), s	2.7	0.0	0.3	2.8	0.0	0.0	4.6	9.1	9.1	0.4	18.1	0.7
Prop In Lane	0.93		1.00	0.73		0.05	1.00		0.04	1.00		1.00
Lane Grp Cap(c), veh/h	258	0	143	206	0	0	146	1250	1307	15	2238	999
V/C Ratio(X)	0.27	0.00	0.05	0.11	0.00	0.00	0.78	0.42	0.42	0.75	0.64	0.04
Avail Cap(c_a), veh/h	575	0	491	536	0	0	514	2099	2194	269	3709	1655
HCM Platoon Ratio	1.00	1.00	1.00	1.00	1.00	1.00	1.00	1.00	1.00	1.00	1.00	1.00
Upstream Filter(I)	1.00	0.00	1.00	1.00	0.00	0.00	1.00	1.00	1.00	1.00	1.00	1.00
Uniform Delay (d), s/veh	30.7	0.0	30.0	30.0	0.0	0.0	32.6	4.5	4.5	35.9	8.2	5.0
Incr Delay (d2), s/veh	0.2	0.0	0.1	0.1	0.0	0.0	3.4	0.5	0.5	24.7	0.7	0.0
Initial Q Delay(d3),s/veh	0.0	0.0	0.0	0.0	0.0	0.0	0.0	0.0	0.0	0.0	0.0	0.0
%ile BackOfQ(50%),veh/ln	1.3	0.0	0.1	0.4	0.0	0.0	2.4	4.4	4.8	0.3	8.9	0.3
LnGrp Delay(d),s/veh	30.9	0.0	30.1	30.1	0.0	0.0	36.0	5.0	4.9	60.6	8.9	5.1
LnGrp LOS	C		C	C			D	A	A	E	A	A
Approach Vol, veh/h		77			22			1200			1482	
Approach Delay, s/veh		30.8			30.1			7.9			9.1	
Approach LOS		C			C			A			A	

Timer	1	2	3	4	5	6	7	8
Assigned Phs	1	2		4	5	6		8
Phs Duration (G+Y+Rc), s	10.0	50.9		11.7	4.6	56.2		11.7
Change Period (Y+Rc), s	4.0	5.0		5.0	4.0	5.0		5.0
Max Green Setting (Gmax), s	21.0	76.0		23.0	11.0	86.0		23.0
Max Q Clear Time (g_c+I1), s	6.6	20.1		4.8	2.4	11.1		4.7
Green Ext Time (p_c), s	0.1	25.8		0.0	0.0	15.2		0.1

Intersection Summary	
HCM 2010 Ctrl Delay	9.4
HCM 2010 LOS	A

Movement	EBL	EBT	EBR	WBL	WBT	WBR	NBL	NBT	NBR	SBL	SBT	SBR
Lane Configurations												
Traffic Volume (veh/h)	65	5	180	45	5	35	110	1050	50	30	1390	75
Future Volume (veh/h)	65	5	180	45	5	35	110	1050	50	30	1390	75
Number	3	8	18	7	4	14	1	6	16	5	2	12
Initial Q (Qb), veh	0	0	0	0	0	0	0	0	0	0	0	0
Ped-Bike Adj(A_pbT)	1.00		1.00	1.00		1.00	1.00		1.00	1.00		1.00
Parking Bus, Adj	1.00	1.00	1.00	1.00	1.00	1.00	1.00	1.00	1.00	1.00	1.00	1.00
Adj Sat Flow, veh/h/ln	1900	1863	1863	1863	1863	1900	1863	1863	1863	1863	1863	1863
Adj Flow Rate, veh/h	71	5	12	49	5	2	120	1141	33	33	1511	45
Adj No. of Lanes	0	1	1	1	1	0	1	2	1	1	2	1
Peak Hour Factor	0.92	0.92	0.92	0.92	0.92	0.92	0.92	0.92	0.92	0.92	0.92	0.92
Percent Heavy Veh, %	2	2	2	2	2	2	2	2	2	2	2	2
Cap, veh/h	275	16	232	223	186	74	154	2262	1012	57	2069	926
Arrive On Green	0.16	0.15	0.15	0.15	0.15	0.15	0.09	0.64	0.64	0.03	0.58	0.58
Sat Flow, veh/h	1299	111	1577	1386	1265	506	1774	3539	1583	1774	3539	1583
Grp Volume(v), veh/h	76	0	12	49	0	7	120	1141	33	33	1511	45
Grp Sat Flow(s),veh/h/ln	1411	0	1577	1386	0	1771	1774	1770	1583	1774	1770	1583
Q Serve(g_s), s	3.7	0.0	0.5	2.7	0.0	0.3	5.5	14.2	0.6	1.5	25.5	1.0
Cycle Q Clear(g_c), s	4.0	0.0	0.5	6.7	0.0	0.3	5.5	14.2	0.6	1.5	25.5	1.0
Prop In Lane	0.93		1.00	1.00		0.29	1.00		1.00	1.00		1.00
Lane Grp Cap(c), veh/h	309	0	232	223	0	260	154	2262	1012	57	2069	926
V/C Ratio(X)	0.25	0.00	0.05	0.22	0.00	0.03	0.78	0.50	0.03	0.58	0.73	0.05
Avail Cap(c_a), veh/h	513	0	459	423	0	515	452	2960	1324	258	2574	1152
HCM Platoon Ratio	1.00	1.00	1.00	1.00	1.00	1.00	1.00	1.00	1.00	1.00	1.00	1.00
Upstream Filter(I)	1.00	0.00	1.00	1.00	0.00	1.00	1.00	1.00	1.00	1.00	1.00	1.00
Uniform Delay (d), s/veh	31.3	0.0	30.2	34.8	0.0	30.1	36.9	7.9	5.5	39.4	12.4	7.3
Incr Delay (d2), s/veh	0.4	0.0	0.1	0.5	0.0	0.0	3.2	0.4	0.0	3.4	1.3	0.0
Initial Q Delay(d3),s/veh	0.0	0.0	0.0	0.0	0.0	0.0	0.0	0.0	0.0	0.0	0.0	0.0
%ile BackOfQ(50%),veh/ln	1.6	0.0	0.2	1.1	0.0	0.1	2.8	6.9	0.3	0.8	12.8	0.4
LnGrp Delay(d),s/veh	31.8	0.0	30.3	35.3	0.0	30.2	40.2	8.3	5.5	42.8	13.7	7.4
LnGrp LOS	C		C	D		C	D	A	A	D	B	A
Approach Vol, veh/h		88			56			1294			1589	
Approach Delay, s/veh		31.6			34.6			11.2			14.1	
Approach LOS		C			C			B			B	

Timer	1	2	3	4	5	6	7	8
Assigned Phs	1	2		4	5	6		8
Phs Duration (G+Y+Rc), s	11.1	54.2		17.1	6.7	58.7		17.1
Change Period (Y+Rc), s	4.0	6.0		5.0	4.0	6.0		5.0
Max Green Setting (Gmax), s	21.0	60.0		24.0	12.0	69.0		24.0
Max Q Clear Time (g_c+I1), s	7.5	27.5		8.7	3.5	16.2		6.0
Green Ext Time (p_c), s	0.2	20.7		0.1	0.0	17.6		0.2

Intersection Summary	
HCM 2010 Ctrl Delay	13.8
HCM 2010 LOS	B

Movement	EBL	EBT	EBR	WBL	WBT	WBR	NBL	NBT	NBR	SBL	SBT	SBR
Lane Configurations												
Traffic Volume (veh/h)	240	5	445	15	5	20	290	1170	15	55	1395	155
Future Volume (veh/h)	240	5	445	15	5	20	290	1170	15	55	1395	155
Number	3	8	18	7	4	14	1	6	16	5	2	12
Initial Q (Qb), veh	0	0	0	0	0	0	0	0	0	0	0	0
Ped-Bike Adj(A_pbT)	1.00		1.00	1.00		1.00	1.00		1.00	1.00		1.00
Parking Bus, Adj	1.00	1.00	1.00	1.00	1.00	1.00	1.00	1.00	1.00	1.00	1.00	1.00
Adj Sat Flow, veh/h/ln	1863	1863	1863	1900	1863	1900	1863	1863	1900	1863	1863	1863
Adj Flow Rate, veh/h	265	0	268	16	5	7	315	1272	16	60	1516	134
Adj No. of Lanes	2	0	2	0	1	0	2	2	0	1	2	1
Peak Hour Factor	0.92	0.92	0.92	0.92	0.92	0.92	0.92	0.92	0.92	0.92	0.92	0.92
Percent Heavy Veh, %	2	2	2	2	2	2	2	2	2	2	2	2
Cap, veh/h	448	0	780	50	16	22	442	2227	28	118	1983	1073
Arrive On Green	0.13	0.00	0.12	0.05	0.05	0.03	0.13	0.62	0.61	0.07	0.56	0.56
Sat Flow, veh/h	3548	0	3167	992	310	434	3442	3579	45	1774	3539	1582
Grp Volume(v), veh/h	265	0	268	28	0	0	315	629	659	60	1516	134
Grp Sat Flow(s),veh/h/ln	1774	0	1583	1737	0	0	1721	1770	1855	1774	1770	1582
Q Serve(g_s), s	8.4	0.0	8.3	1.9	0.0	0.0	10.5	24.8	24.8	3.9	39.2	3.5
Cycle Q Clear(g_c), s	8.4	0.0	8.3	1.9	0.0	0.0	10.5	24.8	24.8	3.9	39.2	3.5
Prop In Lane	1.00		1.00	0.57		0.25	1.00		0.02	1.00		1.00
Lane Grp Cap(c), veh/h	448	0	780	88	0	0	442	1101	1154	118	1983	1073
V/C Ratio(X)	0.59	0.00	0.34	0.32	0.00	0.00	0.71	0.57	0.57	0.51	0.76	0.12
Avail Cap(c_a), veh/h	1013	0	1285	452	0	0	1676	2882	3021	223	4487	2193
HCM Platoon Ratio	1.00	1.00	1.00	1.00	1.00	1.00	1.00	1.00	1.00	1.00	1.00	1.00
Upstream Filter(I)	1.00	0.00	1.00	1.00	0.00	0.00	1.00	1.00	1.00	1.00	1.00	1.00
Uniform Delay (d), s/veh	49.1	0.0	36.9	54.9	0.0	0.0	49.8	13.2	13.2	53.7	20.1	6.7
Incr Delay (d2), s/veh	0.5	0.0	0.1	0.8	0.0	0.0	0.8	0.7	0.6	1.3	0.9	0.1
Initial Q Delay(d3),s/veh	0.0	0.0	0.0	0.0	0.0	0.0	0.0	0.0	0.0	0.0	0.0	0.0
%ile BackOfQ(50%),veh/ln	4.2	0.0	3.6	0.9	0.0	0.0	5.0	12.3	12.8	2.0	19.2	2.1
LnGrp Delay(d),s/veh	49.6	0.0	37.0	55.7	0.0	0.0	50.6	13.8	13.8	55.0	21.0	6.8
LnGrp LOS	D		D	E			D	B	B	D	C	A
Approach Vol, veh/h		533			28			1603			1710	
Approach Delay, s/veh		43.3			55.7			21.1			21.1	
Approach LOS		D			E			C			C	

Timer	1	2	3	4	5	6	7	8
Assigned Phs	1	2		4	5	6		8
Phs Duration (G+Y+Rc), s	19.3	70.7		10.0	11.9	78.1		19.0
Change Period (Y+Rc), s	6.0	6.0		7.0	6.0	6.0		7.0
Max Green Setting (Gmax), s	56.0	149.0		28.0	13.0	192.0		31.0
Max Q Clear Time (g_c+I1), s	12.5	41.2		3.9	5.9	26.8		10.4
Green Ext Time (p_c), s	0.9	23.5		0.0	0.0	13.0		1.6

Intersection Summary	
HCM 2010 Ctrl Delay	24.4
HCM 2010 LOS	C

Notes

Movement	EBL	EBT	EBR	WBL	WBT	WBR	NBL	NBT	NBR	SBL	SBT	SBR
Lane Configurations												
Traffic Volume (veh/h)	5	0	5	135	5	60	5	1345	90	90	1825	10
Future Volume (veh/h)	5	0	5	135	5	60	5	1345	90	90	1825	10
Number	3	8	18	7	4	14	1	6	16	5	2	12
Initial Q (Qb), veh	0	0	0	0	0	0	0	0	0	0	0	0
Ped-Bike Adj(A_pbT)	1.00		1.00	1.00		1.00	1.00		1.00	1.00		1.00
Parking Bus, Adj	1.00	1.00	1.00	1.00	1.00	1.00	1.00	1.00	1.00	1.00	1.00	1.00
Adj Sat Flow, veh/h/ln	1900	1863	1900	1863	1863	1900	1863	1863	1900	1863	1863	1900
Adj Flow Rate, veh/h	5	0	1	147	5	5	5	1462	95	98	1984	11
Adj No. of Lanes	0	1	0	1	1	0	1	2	0	1	2	0
Peak Hour Factor	0.92	0.92	0.92	0.92	0.92	0.92	0.92	0.92	0.92	0.92	0.92	0.92
Percent Heavy Veh, %	2	2	2	2	2	2	2	2	2	2	2	2
Cap, veh/h	194	5	30	234	107	107	11	2404	156	124	2800	16
Arrive On Green	0.13	0.00	0.12	0.13	0.13	0.12	0.01	0.95	0.94	0.07	0.78	0.77
Sat Flow, veh/h	1140	37	235	1410	856	856	1774	3375	218	1774	3609	20
Grp Volume(v), veh/h	6	0	0	147	0	10	5	764	793	98	972	1023
Grp Sat Flow(s),veh/h/ln	1412	0	0	1410	0	1712	1774	1770	1824	1774	1770	1859
Q Serve(g_s), s	0.0	0.0	0.0	12.4	0.0	0.7	0.4	6.9	7.2	7.1	35.5	35.7
Cycle Q Clear(g_c), s	0.7	0.0	0.0	13.0	0.0	0.7	0.4	6.9	7.2	7.1	35.5	35.7
Prop In Lane	0.83		0.17	1.00		0.50	1.00		0.12	1.00		0.01
Lane Grp Cap(c), veh/h	228	0	0	234	0	215	11	1260	1299	124	1373	1443
V/C Ratio(X)	0.03	0.00	0.00	0.63	0.00	0.05	0.44	0.61	0.61	0.79	0.71	0.71
Avail Cap(c_a), veh/h	312	0	0	318	0	316	150	1260	1299	150	1373	1443
HCM Platoon Ratio	1.00	1.00	1.00	1.00	1.00	1.00	1.33	1.33	1.33	1.00	1.00	1.00
Upstream Filter(I)	1.00	0.00	0.00	1.00	0.00	1.00	0.82	0.82	0.82	1.00	1.00	1.00
Uniform Delay (d), s/veh	50.0	0.0	0.0	55.3	0.0	50.2	64.2	1.2	1.2	59.5	7.2	7.3
Incr Delay (d2), s/veh	0.0	0.0	0.0	2.8	0.0	0.1	8.2	1.8	1.8	16.7	3.1	3.0
Initial Q Delay(d3),s/veh	0.0	0.0	0.0	0.0	0.0	0.0	0.0	0.0	0.0	0.0	0.0	0.0
%ile BackOfQ(50%),veh/ln	0.2	0.0	0.0	5.3	0.0	0.3	0.2	3.6	3.8	4.1	18.2	19.1
LnGrp Delay(d),s/veh	50.0	0.0	0.0	58.1	0.0	50.3	72.4	3.0	3.0	76.2	10.3	10.2
LnGrp LOS	D			E		D	E	A	A	E	B	B
Approach Vol, veh/h		6			157			1562			2093	
Approach Delay, s/veh		50.0			57.6			3.2			13.4	
Approach LOS		D			E			A			B	

Timer	1	2	3	4	5	6	7	8
Assigned Phs	1	2		4	5	6		8
Phs Duration (G+Y+Rc), s	4.8	104.9		20.3	13.1	96.6		20.3
Change Period (Y+Rc), s	4.0	5.0		5.0	4.0	5.0		5.0
Max Green Setting (Gmax), s	11.0	82.0		23.0	11.0	82.0		23.0
Max Q Clear Time (g_c+I1), s	2.4	37.7		15.0	9.1	9.2		2.7
Green Ext Time (p_c), s	0.0	34.5		0.3	0.0	30.8		0.0

Intersection Summary	
HCM 2010 Ctrl Delay	11.1
HCM 2010 LOS	B

Movement	EBL	EBT	EBR	WBL	WBT	WBR	NBL	NBT	NBR	SBL	SBT	SBR
Lane Configurations												
Traffic Volume (veh/h)	135	5	15	65	5	15	15	1290	15	10	1605	265
Future Volume (veh/h)	135	5	15	65	5	15	15	1290	15	10	1605	265
Number	3	8	18	7	4	14	1	6	16	5	2	12
Initial Q (Qb), veh	0	0	0	0	0	0	0	0	0	0	0	0
Ped-Bike Adj(A_pbT)	1.00		1.00	1.00		1.00	1.00		1.00	1.00		1.00
Parking Bus, Adj	1.00	1.00	1.00	1.00	1.00	1.00	1.00	1.00	1.00	1.00	1.00	1.00
Adj Sat Flow, veh/h/ln	1900	1863	1900	1900	1863	1900	1863	1863	1900	1863	1863	1863
Adj Flow Rate, veh/h	147	5	13	71	5	9	16	1402	15	11	1745	212
Adj No. of Lanes	0	1	0	0	1	0	1	2	0	1	2	1
Peak Hour Factor	0.92	0.92	0.92	0.92	0.92	0.92	0.92	0.92	0.92	0.92	0.92	0.92
Percent Heavy Veh, %	2	2	2	2	2	2	2	2	2	2	2	2
Cap, veh/h	228	6	16	226	17	23	19	2757	29	13	2709	1211
Arrive On Green	0.13	0.13	0.12	0.13	0.13	0.12	0.01	0.77	0.76	0.01	0.77	0.77
Sat Flow, veh/h	1339	46	118	1336	132	174	1774	3587	38	1774	3539	1582
Grp Volume(v), veh/h	165	0	0	85	0	0	16	691	726	11	1745	212
Grp Sat Flow(s),veh/h/ln	1503	0	0	1642	0	0	1774	1770	1856	1774	1770	1582
Q Serve(g_s), s	7.8	0.0	0.0	0.0	0.0	0.0	1.2	19.3	19.3	0.8	29.6	4.7
Cycle Q Clear(g_c), s	13.7	0.0	0.0	5.9	0.0	0.0	1.2	19.3	19.3	0.8	29.6	4.7
Prop In Lane	0.89		0.08	0.84		0.11	1.00		0.02	1.00		1.00
Lane Grp Cap(c), veh/h	250	0	0	267	0	0	19	1360	1427	13	2709	1211
V/C Ratio(X)	0.66	0.00	0.00	0.32	0.00	0.00	0.84	0.51	0.51	0.82	0.64	0.18
Avail Cap(c_a), veh/h	347	0	0	365	0	0	109	1360	1427	109	2709	1211
HCM Platoon Ratio	1.00	1.00	1.00	1.00	1.00	1.00	1.00	1.00	1.00	1.00	1.00	1.00
Upstream Filter(I)	1.00	0.00	0.00	1.00	0.00	0.00	0.75	0.75	0.75	0.61	0.61	0.61
Uniform Delay (d), s/veh	54.8	0.0	0.0	51.7	0.0	0.0	64.2	5.7	5.7	64.4	7.1	4.1
Incr Delay (d2), s/veh	3.0	0.0	0.0	0.7	0.0	0.0	23.1	1.0	1.0	23.3	0.7	0.2
Initial Q Delay(d3),s/veh	0.0	0.0	0.0	0.0	0.0	0.0	0.0	0.0	0.0	0.0	0.0	0.0
%ile BackOfQ(50%),veh/ln	6.0	0.0	0.0	2.8	0.0	0.0	0.7	9.6	10.1	0.5	14.6	2.1
LnGrp Delay(d),s/veh	57.7	0.0	0.0	52.3	0.0	0.0	87.3	6.7	6.7	87.7	7.8	4.3
LnGrp LOS	E			D			F	A	A	F	A	A
Approach Vol, veh/h		165			85			1433			1968	
Approach Delay, s/veh		57.7			52.3			7.6			7.9	
Approach LOS		E			D			A			A	

Timer	1	2	3	4	5	6	7	8
Assigned Phs	1	2		4	5	6		8
Phs Duration (G+Y+Rc), s	5.4	103.5		21.1	5.0	103.9		21.1
Change Period (Y+Rc), s	4.0	5.0		5.0	4.0	5.0		5.0
Max Green Setting (Gmax), s	8.0	83.0		25.0	8.0	83.0		25.0
Max Q Clear Time (g_c+I1), s	3.2	31.6		7.9	2.8	21.3		15.7
Green Ext Time (p_c), s	0.0	42.2		0.2	0.0	33.3		0.4

Intersection Summary	
HCM 2010 Ctrl Delay	11.1
HCM 2010 LOS	B

Movement	EBL	EBT	EBR	WBL	WBT	WBR	NBL	NBT	NBR	SBL	SBT	SBR
Lane Configurations												
Traffic Volume (veh/h)	190	20	50	90	20	20	60	1320	60	15	1615	130
Future Volume (veh/h)	190	20	50	90	20	20	60	1320	60	15	1615	130
Number	3	8	18	7	4	14	1	6	16	5	2	12
Initial Q (Qb), veh	0	0	0	0	0	0	0	0	0	0	0	0
Ped-Bike Adj(A_pbT)	1.00		1.00	1.00		1.00	1.00		0.99	1.00		1.00
Parking Bus, Adj	1.00	1.00	1.00	1.00	1.00	1.00	1.00	1.00	1.00	1.00	1.00	1.00
Adj Sat Flow, veh/h/ln	1900	1863	1863	1863	1863	1900	1863	1863	1900	1863	1863	1900
Adj Flow Rate, veh/h	207	22	11	98	22	4	65	1435	63	16	1755	137
Adj No. of Lanes	0	1	1	1	1	0	1	2	0	1	2	0
Peak Hour Factor	0.92	0.92	0.92	0.92	0.92	0.92	0.92	0.92	0.92	0.92	0.92	0.92
Percent Heavy Veh, %	2	2	2	2	2	2	2	2	2	2	2	2
Cap, veh/h	288	25	310	378	301	55	83	2419	106	19	2212	171
Arrive On Green	0.20	0.20	0.20	0.20	0.20	0.19	0.06	0.93	0.92	0.01	0.88	0.87
Sat Flow, veh/h	1197	127	1576	1380	1533	279	1774	3453	151	1774	3330	257
Grp Volume(v), veh/h	229	0	11	98	0	26	65	734	764	16	923	969
Grp Sat Flow(s),veh/h/ln	1325	0	1576	1380	0	1812	1774	1770	1835	1774	1770	1817
Q Serve(g_s), s	20.6	0.0	0.7	0.0	0.0	1.5	4.7	8.2	8.4	1.2	25.7	28.0
Cycle Q Clear(g_c), s	22.1	0.0	0.7	6.5	0.0	1.5	4.7	8.2	8.4	1.2	25.7	28.0
Prop In Lane	0.90		1.00	1.00		0.15	1.00		0.08	1.00		0.14
Lane Grp Cap(c), veh/h	313	0	310	378	0	356	83	1239	1285	19	1176	1207
V/C Ratio(X)	0.73	0.00	0.04	0.26	0.00	0.07	0.79	0.59	0.59	0.84	0.78	0.80
Avail Cap(c_a), veh/h	372	0	376	435	0	432	109	1239	1285	109	1176	1207
HCM Platoon Ratio	1.00	1.00	1.00	1.00	1.00	1.00	1.33	1.33	1.33	1.33	1.33	1.33
Upstream Filter(I)	1.00	0.00	1.00	1.00	0.00	1.00	0.63	0.63	0.63	0.69	0.69	0.69
Uniform Delay (d), s/veh	51.6	0.0	42.3	44.6	0.0	42.6	60.3	1.6	1.6	64.0	4.0	4.2
Incr Delay (d2), s/veh	5.9	0.0	0.0	0.4	0.0	0.1	11.4	1.3	1.3	21.5	3.7	4.0
Initial Q Delay(d3),s/veh	0.0	0.0	0.0	0.0	0.0	0.0	0.0	0.0	0.0	0.0	0.0	0.0
%ile BackOfQ(50%),veh/ln	8.5	0.0	0.3	3.0	0.0	0.8	2.6	4.2	4.3	0.7	13.0	14.5
LnGrp Delay(d),s/veh	57.5	0.0	42.3	44.9	0.0	42.7	71.7	2.9	2.9	85.5	7.8	8.2
LnGrp LOS	E		D	D		D	E	A	A	F	A	A
Approach Vol, veh/h		240			124			1563			1908	
Approach Delay, s/veh		56.8			44.5			5.8			8.7	
Approach LOS		E			D			A			A	

Timer	1	2	3	4	5	6	7	8
Assigned Phs	1	2		4	5	6		8
Phs Duration (G+Y+Rc), s	10.1	90.4		29.6	5.4	95.1		29.6
Change Period (Y+Rc), s	4.0	5.0		5.0	4.0	5.0		5.0
Max Green Setting (Gmax), s	8.0	78.0		30.0	8.0	78.0		30.0
Max Q Clear Time (g_c+I1), s	10.7	30.0		8.5	3.2	10.4		24.1
Green Ext Time (p_c), s	0.0	34.5		0.4	0.0	27.7		0.5

Intersection Summary	
HCM 2010 Ctrl Delay	11.7
HCM 2010 LOS	B

Notes

Movement	EBL	EBT	EBR	WBL	WBT	WBR	NBL	NBT	NBR	SBL	SBT	SBR
Lane Configurations												
Traffic Volume (veh/h)	60	150	90	145	130	655	80	720	195	575	955	100
Future Volume (veh/h)	60	150	90	145	130	655	80	720	195	575	955	100
Number	7	4	14	3	8	18	1	6	16	5	2	12
Initial Q (Qb), veh	0	0	0	0	0	0	0	0	0	0	0	0
Ped-Bike Adj(A_pbT)	0.98		0.95	1.00		0.97	1.00		0.99	1.00		1.00
Parking Bus, Adj	1.00	1.00	1.00	1.00	1.00	1.00	1.00	1.00	1.00	1.00	1.00	1.00
Adj Sat Flow, veh/h/ln	1900	1863	1863	1863	1863	1863	1863	1863	1863	1863	1863	1900
Adj Flow Rate, veh/h	65	163	10	158	141	322	87	783	127	625	1038	104
Adj No. of Lanes	0	1	1	1	1	1	1	2	1	2	2	0
Peak Hour Factor	0.92	0.92	0.92	0.92	0.92	0.92	0.92	0.92	0.92	0.92	0.92	0.92
Percent Heavy Veh, %	2	2	2	2	2	2	2	2	2	2	2	2
Cap, veh/h	100	195	267	253	560	463	110	1423	628	705	1771	177
Arrive On Green	0.18	0.18	0.18	0.09	0.30	0.30	0.06	0.40	0.40	0.14	0.37	0.36
Sat Flow, veh/h	366	1107	1511	1774	1863	1541	1774	3539	1562	3442	3249	325
Grp Volume(v), veh/h	228	0	10	158	141	322	87	783	127	625	565	577
Grp Sat Flow(s),veh/h/ln	1473	0	1511	1774	1863	1541	1774	1770	1562	1721	1770	1805
Q Serve(g_s), s	17.2	0.0	0.7	9.1	7.4	24.0	6.3	22.1	6.9	23.2	33.5	33.6
Cycle Q Clear(g_c), s	19.5	0.0	0.7	9.1	7.4	24.0	6.3	22.1	6.9	23.2	33.5	33.6
Prop In Lane	0.29		1.00	1.00		1.00	1.00		1.00	1.00		0.18
Lane Grp Cap(c), veh/h	296	0	267	253	560	463	110	1423	628	705	965	984
V/C Ratio(X)	0.77	0.00	0.04	0.62	0.25	0.70	0.79	0.55	0.20	0.89	0.59	0.59
Avail Cap(c_a), veh/h	329	0	302	278	630	521	328	1423	628	953	965	984
HCM Platoon Ratio	1.00	1.00	1.00	1.00	1.00	1.00	1.00	1.00	1.00	0.67	0.67	0.67
Upstream Filter(I)	1.00	0.00	1.00	1.00	1.00	1.00	0.79	0.79	0.79	0.50	0.50	0.50
Uniform Delay (d), s/veh	51.8	0.0	44.4	38.5	34.4	40.2	60.2	29.8	25.3	54.6	29.4	29.5
Incr Delay (d2), s/veh	9.7	0.0	0.1	3.7	0.2	3.5	3.8	1.2	0.6	3.4	1.3	1.3
Initial Q Delay(d3),s/veh	0.0	0.0	0.0	0.0	0.0	0.0	0.0	0.0	0.0	0.0	0.0	0.0
%ile BackOfQ(50%),veh/ln	8.8	0.0	0.3	4.7	3.9	10.6	3.2	11.0	3.1	11.4	16.8	17.1
LnGrp Delay(d),s/veh	61.6	0.0	44.4	42.2	34.6	43.7	64.0	31.0	25.9	58.0	30.7	30.8
LnGrp LOS	E		D	D	C	D	E	C	C	E	C	C
Approach Vol, veh/h		238			621			997			1767	
Approach Delay, s/veh		60.8			41.2			33.3			40.4	
Approach LOS		E			D			C			D	

Timer	1	2	3	4	5	6	7	8
Assigned Phs	1	2	3	4	5	6		8
Phs Duration (G+Y+Rc), s	12.0	74.9	16.1	26.9	30.6	56.3		43.1
Change Period (Y+Rc), s	4.0	5.0	5.0	5.0	4.0	5.0		5.0
Max Green Setting (Gmax), s	24.0	49.0	13.0	25.0	36.0	37.0		43.0
Max Q Clear Time (g_c+I1), s	9.3	35.6	11.1	21.5	25.2	24.1		26.0
Green Ext Time (p_c), s	0.1	8.0	0.1	0.3	1.5	6.5		2.0

Intersection Summary	
HCM 2010 Ctrl Delay	39.9
HCM 2010 LOS	D

Notes

Intersection	
Int Delay, s/veh	0

Movement	WBL	WBR	NBT	NBR	SBL	SBT
Lane Configurations		↱	↑	↱		↑
Traffic Vol, veh/h	0	0	615	0	0	735
Future Vol, veh/h	0	0	615	0	0	735
Conflicting Peds, #/hr	0	0	0	0	0	0
Sign Control	Stop	Stop	Free	Free	Free	Free
RT Channelized	-	None	-	None	-	None
Storage Length	-	0	-	0	-	-
Veh in Median Storage, #	0	-	0	-	-	0
Grade, %	0	-	0	-	-	0
Peak Hour Factor	92	92	92	92	92	92
Heavy Vehicles, %	2	2	2	2	2	2
Mvmt Flow	0	0	668	0	0	799

Major/Minor	Minor1		Major1		Major2	
Conflicting Flow All	-	668	0	0	-	-
Stage 1	-	-	-	-	-	-
Stage 2	-	-	-	-	-	-
Critical Hdwy	-	6.22	-	-	-	-
Critical Hdwy Stg 1	-	-	-	-	-	-
Critical Hdwy Stg 2	-	-	-	-	-	-
Follow-up Hdwy	-	3.318	-	-	-	-
Pot Cap-1 Maneuver	0	458	-	-	0	-
Stage 1	0	-	-	-	0	-
Stage 2	0	-	-	-	0	-
Platoon blocked, %			-	-		-
Mov Cap-1 Maneuver	-	458	-	-	-	-
Mov Cap-2 Maneuver	-	-	-	-	-	-
Stage 1	-	-	-	-	-	-
Stage 2	-	-	-	-	-	-

Approach	WB	NB	SB
HCM Control Delay, s	0	0	0
HCM LOS	A		

Minor Lane/Major Mvmt	NBT	NBR	WBLn1	SBT
Capacity (veh/h)	-	-	-	-
HCM Lane V/C Ratio	-	-	-	-
HCM Control Delay (s)	-	-	0	-
HCM Lane LOS	-	-	A	-
HCM 95th %tile Q(veh)	-	-	-	-

Intersection	
Int Delay, s/veh	0

Movement	WBL	WBR	NBT	NBR	SBL	SBT
Lane Configurations						
Traffic Vol, veh/h	0	0	680	0	0	790
Future Vol, veh/h	0	0	680	0	0	790
Conflicting Peds, #/hr	0	0	0	0	0	0
Sign Control	Stop	Stop	Free	Free	Free	Free
RT Channelized	-	None	-	None	-	None
Storage Length	0	100	-	100	100	-
Veh in Median Storage, #	0	-	0	-	-	0
Grade, %	0	-	0	-	-	0
Peak Hour Factor	92	92	92	92	92	92
Heavy Vehicles, %	2	2	2	2	2	2
Mvmt Flow	0	0	739	0	0	859

Major/Minor	Minor1		Major1		Major2	
Conflicting Flow All	1598	739	0	0	739	0
Stage 1	739	-	-	-	-	-
Stage 2	859	-	-	-	-	-
Critical Hdwy	6.42	6.22	-	-	4.12	-
Critical Hdwy Stg 1	5.42	-	-	-	-	-
Critical Hdwy Stg 2	5.42	-	-	-	-	-
Follow-up Hdwy	3.518	3.318	-	-	2.218	-
Pot Cap-1 Maneuver	117	417	-	-	867	-
Stage 1	472	-	-	-	-	-
Stage 2	415	-	-	-	-	-
Platoon blocked, %			-	-		-
Mov Cap-1 Maneuver	117	417	-	-	867	-
Mov Cap-2 Maneuver	255	-	-	-	-	-
Stage 1	472	-	-	-	-	-
Stage 2	415	-	-	-	-	-

Approach	WB	NB	SB
HCM Control Delay, s	0	0	0
HCM LOS	A		

Minor Lane/Major Mvmt	NBT	NBR	WBLn1	WBLn2	SBL	SBT
Capacity (veh/h)	-	-	-	-	867	-
HCM Lane V/C Ratio	-	-	-	-	-	-
HCM Control Delay (s)	-	-	0	0	0	-
HCM Lane LOS	-	-	A	A	A	-
HCM 95th %tile Q(veh)	-	-	-	-	0	-

Intersection	
Int Delay, s/veh	3

Movement	EBL	EBT	EBR	WBL	WBT	WBR	NBL	NBT	NBR	SBL	SBT	SBR
Lane Configurations												
Traffic Vol, veh/h	15	55	10	5	55	5	10	5	5	5	5	15
Future Vol, veh/h	15	55	10	5	55	5	10	5	5	5	5	15
Conflicting Peds, #/hr	0	0	0	0	0	0	0	0	0	0	0	0
Sign Control	Free	Free	Free	Free	Free	Free	Stop	Stop	Stop	Stop	Stop	Stop
RT Channelized	-	-	None	-	-	None	-	-	None	-	-	None
Storage Length	100	-	-	100	-	-	-	-	-	-	-	-
Veh in Median Storage, #	-	0	-	-	0	-	-	0	-	-	0	-
Grade, %	-	0	-	-	0	-	-	0	-	-	0	-
Peak Hour Factor	92	92	92	92	92	92	92	92	92	92	92	92
Heavy Vehicles, %	2	2	2	2	2	2	2	2	2	2	2	2
Mvmt Flow	16	60	11	5	60	5	11	5	5	5	5	16

Major/Minor	Major1			Major2			Minor1			Minor2		
Conflicting Flow All	65	0	0	71	0	0	181	173	66	176	176	63
Stage 1	-	-	-	-	-	-	98	98	-	73	73	-
Stage 2	-	-	-	-	-	-	83	75	-	103	103	-
Critical Hdwy	4.12	-	-	4.12	-	-	7.12	6.52	6.22	7.12	6.52	6.22
Critical Hdwy Stg 1	-	-	-	-	-	-	6.12	5.52	-	6.12	5.52	-
Critical Hdwy Stg 2	-	-	-	-	-	-	6.12	5.52	-	6.12	5.52	-
Follow-up Hdwy	2.218	-	-	2.218	-	-	3.518	4.018	3.318	3.518	4.018	3.318
Pot Cap-1 Maneuver	1537	-	-	1529	-	-	781	720	998	786	717	1002
Stage 1	-	-	-	-	-	-	908	814	-	937	834	-
Stage 2	-	-	-	-	-	-	925	833	-	903	810	-
Platoon blocked, %		-	-		-	-						
Mov Cap-1 Maneuver	1537	-	-	1529	-	-	756	711	998	769	708	1002
Mov Cap-2 Maneuver	-	-	-	-	-	-	756	711	-	769	708	-
Stage 1	-	-	-	-	-	-	899	806	-	928	831	-
Stage 2	-	-	-	-	-	-	901	831	-	883	802	-

Approach	EB	WB	NB	SB
HCM Control Delay, s	1.4	0.6	9.7	9.2
HCM LOS			A	A

Minor Lane/Major Mvmt	NBLn1	EBL	EBT	EBR	WBL	WBT	WBR	SBLn1
Capacity (veh/h)	791	1537	-	-	1529	-	-	876
HCM Lane V/C Ratio	0.027	0.011	-	-	0.004	-	-	0.031
HCM Control Delay (s)	9.7	7.4	-	-	7.4	-	-	9.2
HCM Lane LOS	A	A	-	-	A	-	-	A
HCM 95th %tile Q(veh)	0.1	0	-	-	0	-	-	0.1

Intersection	
Int Delay, s/veh	4.2

Movement	EBL	EBT	EBR	WBL	WBT	WBR	NBL	NBT	NBR	SBL	SBT	SBR
Lane Configurations												
Traffic Vol, veh/h	10	20	25	5	25	5	25	5	5	5	5	10
Future Vol, veh/h	10	20	25	5	25	5	25	5	5	5	5	10
Conflicting Peds, #/hr	0	0	0	0	0	0	0	0	0	0	0	0
Sign Control	Free	Free	Free	Free	Free	Free	Stop	Stop	Stop	Stop	Stop	Stop
RT Channelized	-	-	None	-	-	None	-	-	None	-	-	None
Storage Length	-	-	-	-	-	-	-	-	-	-	-	-
Veh in Median Storage, #	-	0	-	-	0	-	-	0	-	-	0	-
Grade, %	-	0	-	-	0	-	-	0	-	-	0	-
Peak Hour Factor	92	92	92	92	92	92	92	92	92	92	92	92
Heavy Vehicles, %	2	2	2	2	2	2	2	2	2	2	2	2
Mvmt Flow	11	22	27	5	27	5	27	5	5	5	5	11

Major/Minor	Major1			Major2			Minor1			Minor2		
Conflicting Flow All	32	0	0	49	0	0	106	100	36	103	111	30
Stage 1	-	-	-	-	-	-	58	58	-	40	40	-
Stage 2	-	-	-	-	-	-	48	42	-	63	71	-
Critical Hdwy	4.12	-	-	4.12	-	-	7.12	6.52	6.22	7.12	6.52	6.22
Critical Hdwy Stg 1	-	-	-	-	-	-	6.12	5.52	-	6.12	5.52	-
Critical Hdwy Stg 2	-	-	-	-	-	-	6.12	5.52	-	6.12	5.52	-
Follow-up Hdwy	2.218	-	-	2.218	-	-	3.518	4.018	3.318	3.518	4.018	3.318
Pot Cap-1 Maneuver	1580	-	-	1558	-	-	873	790	1037	877	779	1044
Stage 1	-	-	-	-	-	-	954	847	-	975	862	-
Stage 2	-	-	-	-	-	-	965	860	-	948	836	-
Platoon blocked, %		-	-		-	-						
Mov Cap-1 Maneuver	1580	-	-	1558	-	-	853	782	1037	861	771	1044
Mov Cap-2 Maneuver	-	-	-	-	-	-	853	782	-	861	771	-
Stage 1	-	-	-	-	-	-	947	841	-	968	859	-
Stage 2	-	-	-	-	-	-	946	857	-	930	830	-

Approach	EB	WB	NB	SB
HCM Control Delay, s	1.3	1	9.4	9
HCM LOS			A	A

Minor Lane/Major Mvmt	NBLn1	EBL	EBT	EBR	WBL	WBT	WBR	SBLn1
Capacity (veh/h)	864	1580	-	-	1558	-	-	914
HCM Lane V/C Ratio	0.044	0.007	-	-	0.003	-	-	0.024
HCM Control Delay (s)	9.4	7.3	0	-	7.3	0	-	9
HCM Lane LOS	A	A	A	-	A	A	-	A
HCM 95th %tile Q(veh)	0.1	0	-	-	0	-	-	0.1

APPENDIX C

LEVEL OF SERVICE CALCULATIONS

- Future Year 2022 Scenario 2 AM Peak

Movement	EBL	EBT	EBR	WBL	WBT	WBR	NBL	NBT	NBR	SBL	SBT	SBR
Lane Configurations												
Traffic Volume (veh/h)	50	45	305	95	50	20	240	250	110	10	140	30
Future Volume (veh/h)	50	45	305	95	50	20	240	250	110	10	140	30
Number	7	4	14	3	8	18	5	2	12	1	6	16
Initial Q (Qb), veh	0	0	0	0	0	0	0	0	0	0	0	0
Ped-Bike Adj(A_pbT)	0.99		0.99	0.99		0.99	1.00		1.00	1.00		1.00
Parking Bus, Adj	1.00	1.00	1.00	1.00	1.00	1.00	1.00	1.00	1.00	1.00	1.00	1.00
Adj Sat Flow, veh/h/ln	1900	1863	1863	1863	1863	1900	1863	1863	1863	1863	1863	1863
Adj Flow Rate, veh/h	54	49	43	103	54	11	261	272	57	11	152	8
Adj No. of Lanes	0	1	1	1	1	0	1	1	1	1	1	1
Peak Hour Factor	0.92	0.92	0.92	0.92	0.92	0.92	0.92	0.92	0.92	0.92	0.92	0.92
Percent Heavy Veh, %	2	2	2	2	2	2	2	2	2	2	2	2
Cap, veh/h	237	170	265	329	253	52	346	803	682	15	456	387
Arrive On Green	0.17	0.17	0.17	0.17	0.17	0.17	0.19	0.43	0.43	0.01	0.24	0.24
Sat Flow, veh/h	609	1004	1569	1290	1500	306	1774	1863	1583	1774	1863	1583
Grp Volume(v), veh/h	103	0	43	103	0	65	261	272	57	11	152	8
Grp Sat Flow(s),veh/h/ln	1613	0	1569	1290	0	1806	1774	1863	1583	1774	1863	1583
Q Serve(g_s), s	0.4	0.0	1.0	3.1	0.0	1.3	5.7	4.0	0.9	0.3	2.7	0.2
Cycle Q Clear(g_c), s	2.1	0.0	1.0	5.2	0.0	1.3	5.7	4.0	0.9	0.3	2.7	0.2
Prop In Lane	0.52		1.00	1.00		0.17	1.00		1.00	1.00		1.00
Lane Grp Cap(c), veh/h	407	0	265	329	0	305	346	803	682	15	456	387
V/C Ratio(X)	0.25	0.00	0.16	0.31	0.00	0.21	0.75	0.34	0.08	0.72	0.33	0.02
Avail Cap(c_a), veh/h	1048	0	922	869	0	1060	1302	3601	3061	651	2917	2480
HCM Platoon Ratio	1.00	1.00	1.00	1.00	1.00	1.00	1.00	1.00	1.00	1.00	1.00	1.00
Upstream Filter(I)	1.00	0.00	1.00	1.00	0.00	1.00	1.00	1.00	1.00	1.00	1.00	1.00
Uniform Delay (d), s/veh	14.9	0.0	14.5	17.3	0.0	14.6	15.5	7.7	6.9	20.2	12.7	11.7
Incr Delay (d2), s/veh	0.3	0.0	0.3	0.5	0.0	0.3	3.4	0.5	0.1	47.4	0.9	0.0
Initial Q Delay(d3),s/veh	0.0	0.0	0.0	0.0	0.0	0.0	0.0	0.0	0.0	0.0	0.0	0.0
%ile BackOfQ(50%),veh/ln	1.0	0.0	0.4	1.2	0.0	0.7	3.1	2.2	0.4	0.3	1.5	0.1
LnGrp Delay(d),s/veh	15.3	0.0	14.8	17.8	0.0	15.0	18.9	8.3	7.0	67.6	13.6	11.8
LnGrp LOS	B		B	B		B	B	A	A	E	B	B
Approach Vol, veh/h		146			168			590			171	
Approach Delay, s/veh		15.1			16.7			12.8			17.0	
Approach LOS		B			B			B			B	

Timer	1	2	3	4	5	6	7	8
Assigned Phs	1	2		4	5	6		8
Phs Duration (G+Y+Rc), s	5.4	23.6		11.9	13.0	16.0		11.9
Change Period (Y+Rc), s	5.0	6.0		5.0	5.0	6.0		5.0
Max Green Setting (Gmax), s	15.0	79.0		24.0	30.0	64.0		24.0
Max Q Clear Time (g_c+I1), s	2.3	6.0		4.1	7.7	4.7		7.2
Green Ext Time (p_c), s	0.0	4.1		0.6	0.7	1.9		0.6

Intersection Summary	
HCM 2010 Ctrl Delay	14.4
HCM 2010 LOS	B

Movement	EBL	EBT	EBR	WBL	WBT	WBR	NBL	NBT	NBR	SBL	SBT	SBR
Lane Configurations												
Traffic Volume (veh/h)	60	5	185	95	20	15	150	565	15	10	535	65
Future Volume (veh/h)	60	5	185	95	20	15	150	565	15	10	535	65
Number	7	4	14	3	8	18	5	2	12	1	6	16
Initial Q (Qb), veh	0	0	0	0	0	0	0	0	0	0	0	0
Ped-Bike Adj(A_pbT)	0.98		0.98	0.98		0.98	1.00		1.00	1.00		0.99
Parking Bus, Adj	1.00	1.00	1.00	1.00	1.00	1.00	1.00	1.00	1.00	1.00	1.00	1.00
Adj Sat Flow, veh/h/ln	1900	1863	1863	1863	1863	1900	1863	1863	1863	1863	1863	1863
Adj Flow Rate, veh/h	65	5	21	103	22	2	163	614	0	11	582	29
Adj No. of Lanes	0	1	1	1	1	0	1	1	1	1	1	1
Peak Hour Factor	0.92	0.92	0.92	0.92	0.92	0.92	0.92	0.92	0.92	0.92	0.92	0.92
Percent Heavy Veh, %	2	2	2	2	2	2	2	2	2	2	2	2
Cap, veh/h	378	24	312	343	339	31	403	899	764	336	742	626
Arrive On Green	0.20	0.20	0.20	0.20	0.20	0.20	0.09	0.48	0.00	0.01	0.40	0.40
Sat Flow, veh/h	1211	120	1544	1350	1679	153	1774	1863	1583	1774	1863	1571
Grp Volume(v), veh/h	70	0	21	103	0	24	163	614	0	11	582	29
Grp Sat Flow(s),veh/h/ln	1331	0	1544	1350	0	1831	1774	1863	1583	1774	1863	1571
Q Serve(g_s), s	2.0	0.0	0.6	3.6	0.0	0.6	2.5	13.3	0.0	0.2	14.2	0.6
Cycle Q Clear(g_c), s	2.6	0.0	0.6	6.2	0.0	0.6	2.5	13.3	0.0	0.2	14.2	0.6
Prop In Lane	0.93		1.00	1.00		0.08	1.00		1.00	1.00		1.00
Lane Grp Cap(c), veh/h	402	0	312	343	0	370	403	899	764	336	742	626
V/C Ratio(X)	0.17	0.00	0.07	0.30	0.00	0.06	0.40	0.68	0.00	0.03	0.78	0.05
Avail Cap(c_a), veh/h	785	0	741	719	0	879	750	1824	1551	832	1824	1539
HCM Platoon Ratio	1.00	1.00	1.00	1.00	1.00	1.00	1.00	1.00	1.00	1.00	1.00	1.00
Upstream Filter(I)	1.00	0.00	1.00	1.00	0.00	1.00	1.00	1.00	0.00	1.00	1.00	1.00
Uniform Delay (d), s/veh	17.7	0.0	16.8	20.3	0.0	16.8	9.6	10.4	0.0	10.0	13.7	9.6
Incr Delay (d2), s/veh	0.2	0.0	0.1	0.5	0.0	0.1	0.7	0.9	0.0	0.0	1.9	0.0
Initial Q Delay(d3),s/veh	0.0	0.0	0.0	0.0	0.0	0.0	0.0	0.0	0.0	0.0	0.0	0.0
%ile BackOfQ(50%),veh/ln	0.9	0.0	0.3	1.4	0.0	0.3	1.3	6.9	0.0	0.1	7.7	0.3
LnGrp Delay(d),s/veh	17.9	0.0	16.9	20.8	0.0	16.9	10.3	11.3	0.0	10.0	15.6	9.6
LnGrp LOS	B		B	C		B	B	B		B	B	A
Approach Vol, veh/h		91			127			777			622	
Approach Delay, s/veh		17.7			20.0			11.1			15.2	
Approach LOS		B			C			B			B	

Timer	1	2	3	4	5	6	7	8
Assigned Phs	1	2		4	5	6		8
Phs Duration (G+Y+Rc), s	5.4	31.1		15.5	9.8	26.7		15.5
Change Period (Y+Rc), s	5.0	6.0		5.0	5.0	6.0		5.0
Max Green Setting (Gmax), s	15.0	51.0		25.0	15.0	51.0		25.0
Max Q Clear Time (g_c+I1), s	2.2	15.3		4.6	4.5	16.2		8.2
Green Ext Time (p_c), s	0.0	4.5		0.4	0.3	4.3		0.3

Intersection Summary	
HCM 2010 Ctrl Delay	13.8
HCM 2010 LOS	B

Notes

Movement	EBL	EBT	EBR	WBL	WBT	WBR	NBL	NBT	NBR	SBL	SBT	SBR
Lane Configurations												
Traffic Volume (veh/h)	45	20	125	90	40	60	60	620	55	40	715	30
Future Volume (veh/h)	45	20	125	90	40	60	60	620	55	40	715	30
Number	7	4	14	3	8	18	5	2	12	1	6	16
Initial Q (Qb), veh	0	0	0	0	0	0	0	0	0	0	0	0
Ped-Bike Adj(A_pbT)	1.00		0.99	1.00		0.99	1.00		1.00	1.00		1.00
Parking Bus, Adj	1.00	1.00	1.00	1.00	1.00	1.00	1.00	1.00	1.00	1.00	1.00	1.00
Adj Sat Flow, veh/h/ln	1863	1863	1900	1863	1863	1863	1863	1863	1863	1863	1863	1863
Adj Flow Rate, veh/h	49	22	7	98	43	6	65	674	28	43	777	16
Adj No. of Lanes	1	1	0	1	1	1	1	1	1	1	1	1
Peak Hour Factor	0.92	0.92	0.92	0.92	0.92	0.92	0.92	0.92	0.92	0.92	0.92	0.92
Percent Heavy Veh, %	2	2	2	2	2	2	2	2	2	2	2	2
Cap, veh/h	62	180	57	128	318	268	85	930	791	54	898	763
Arrive On Green	0.04	0.13	0.13	0.07	0.17	0.17	0.05	0.50	0.50	0.03	0.48	0.48
Sat Flow, veh/h	1774	1350	429	1774	1863	1572	1774	1863	1583	1774	1863	1583
Grp Volume(v), veh/h	49	0	29	98	43	6	65	674	28	43	777	16
Grp Sat Flow(s),veh/h/ln	1774	0	1779	1774	1863	1572	1774	1863	1583	1774	1863	1583
Q Serve(g_s), s	2.1	0.0	1.1	4.1	1.5	0.2	2.7	21.5	0.7	1.8	28.1	0.4
Cycle Q Clear(g_c), s	2.1	0.0	1.1	4.1	1.5	0.2	2.7	21.5	0.7	1.8	28.1	0.4
Prop In Lane	1.00		0.24	1.00		1.00	1.00		1.00	1.00		1.00
Lane Grp Cap(c), veh/h	62	0	237	128	318	268	85	930	791	54	898	763
V/C Ratio(X)	0.78	0.00	0.12	0.76	0.14	0.02	0.77	0.72	0.04	0.79	0.87	0.02
Avail Cap(c_a), veh/h	469	0	494	469	517	436	586	1599	1359	586	1599	1359
HCM Platoon Ratio	1.00	1.00	1.00	1.00	1.00	1.00	1.00	1.00	1.00	1.00	1.00	1.00
Upstream Filter(I)	1.00	0.00	1.00	1.00	1.00	1.00	1.00	1.00	1.00	1.00	1.00	1.00
Uniform Delay (d), s/veh	36.2	0.0	28.9	34.5	26.7	26.1	35.6	14.9	9.7	36.5	17.4	10.3
Incr Delay (d2), s/veh	18.9	0.0	0.2	9.0	0.2	0.0	13.3	1.1	0.0	22.1	2.7	0.0
Initial Q Delay(d3),s/veh	0.0	0.0	0.0	0.0	0.0	0.0	0.0	0.0	0.0	0.0	0.0	0.0
%ile BackOfQ(50%),veh/ln	1.3	0.0	0.5	2.3	0.8	0.1	1.6	11.1	0.3	1.2	14.9	0.2
LnGrp Delay(d),s/veh	55.2	0.0	29.1	43.5	26.8	26.2	48.9	16.0	9.7	58.6	20.1	10.3
LnGrp LOS	E		C	D	C	C	D	B	A	E	C	B
Approach Vol, veh/h		78			147			767			836	
Approach Delay, s/veh		45.5			37.9			18.5			21.9	
Approach LOS		D			D			B			C	

Timer	1	2	3	4	5	6	7	8
Assigned Phs	1	2	3	4	5	6	7	8
Phs Duration (G+Y+Rc), s	7.3	42.8	10.5	15.1	8.6	41.5	7.7	17.9
Change Period (Y+Rc), s	5.0	5.0	5.0	5.0	5.0	5.0	5.0	5.0
Max Green Setting (Gmax), s	25.0	65.0	20.0	21.0	25.0	65.0	20.0	21.0
Max Q Clear Time (g_c+I1), s	3.8	23.5	6.1	3.1	4.7	30.1	4.1	3.5
Green Ext Time (p_c), s	0.1	5.3	0.2	0.1	0.1	6.4	0.1	0.1

Intersection Summary	
HCM 2010 Ctrl Delay	22.8
HCM 2010 LOS	C

Movement	EBL	EBT	EBR	WBL	WBT	WBR	NBL	NBT	NBR	SBL	SBT	SBR
Lane Configurations												
Traffic Volume (veh/h)	35	10	480	20	5	0	315	730	45	10	885	15
Future Volume (veh/h)	35	10	480	20	5	0	315	730	45	10	885	15
Number	3	8	18	7	4	14	1	6	16	5	2	12
Initial Q (Qb), veh	0	0	0	0	0	0	0	0	0	0	0	0
Ped-Bike Adj(A_pbT)	0.99		1.00	0.99		1.00	1.00		1.00	1.00		1.00
Parking Bus, Adj	1.00	1.00	1.00	1.00	1.00	1.00	1.00	1.00	1.00	1.00	1.00	1.00
Adj Sat Flow, veh/h/ln	1900	1863	1863	1900	1863	1900	1863	1863	1900	1863	1863	1863
Adj Flow Rate, veh/h	38	11	0	22	5	0	342	793	48	11	962	6
Adj No. of Lanes	0	1	1	0	1	0	1	2	0	1	2	1
Peak Hour Factor	0.92	0.92	0.92	0.92	0.92	0.92	0.92	0.92	0.92	0.92	0.92	0.92
Percent Heavy Veh, %	2	2	2	2	2	2	2	2	2	2	2	2
Cap, veh/h	186	30	114	191	30	0	407	2272	138	15	1589	711
Arrive On Green	0.09	0.07	0.00	0.09	0.07	0.00	0.23	0.67	0.67	0.01	0.45	0.45
Sat Flow, veh/h	1111	420	1583	1149	419	0	1774	3391	205	1774	3539	1583
Grp Volume(v), veh/h	49	0	0	27	0	0	342	414	427	11	962	6
Grp Sat Flow(s),veh/h/ln	1531	0	1583	1568	0	0	1774	1770	1827	1774	1770	1583
Q Serve(g_s), s	0.9	0.0	0.0	0.0	0.0	0.0	11.1	6.0	6.0	0.4	12.3	0.1
Cycle Q Clear(g_c), s	1.7	0.0	0.0	0.8	0.0	0.0	11.1	6.0	6.0	0.4	12.3	0.1
Prop In Lane	0.78		1.00	0.81		0.00	1.00		0.11	1.00		1.00
Lane Grp Cap(c), veh/h	242	0	114	247	0	0	407	1186	1224	15	1589	711
V/C Ratio(X)	0.20	0.00	0.00	0.11	0.00	0.00	0.84	0.35	0.35	0.74	0.61	0.01
Avail Cap(c_a), veh/h	875	0	791	799	0	0	2098	1680	1734	2098	3360	1503
HCM Platoon Ratio	1.00	1.00	1.00	1.00	1.00	1.00	1.00	1.00	1.00	1.00	1.00	1.00
Upstream Filter(I)	1.00	0.00	0.00	1.00	0.00	0.00	1.00	1.00	1.00	1.00	1.00	1.00
Uniform Delay (d), s/veh	26.2	0.0	0.0	25.9	0.0	0.0	22.1	4.3	4.3	29.7	12.5	9.1
Incr Delay (d2), s/veh	0.4	0.0	0.0	0.2	0.0	0.0	1.8	0.4	0.4	23.1	0.8	0.0
Initial Q Delay(d3),s/veh	0.0	0.0	0.0	0.0	0.0	0.0	0.0	0.0	0.0	0.0	0.0	0.0
%ile BackOfQ(50%),veh/ln	0.8	0.0	0.0	0.4	0.0	0.0	5.6	3.0	3.1	0.3	6.2	0.1
LnGrp Delay(d),s/veh	26.6	0.0	0.0	26.1	0.0	0.0	23.9	4.6	4.6	52.8	13.3	9.2
LnGrp LOS	C			C			C	A	A	D	B	A
Approach Vol, veh/h		49			27			1183			979	
Approach Delay, s/veh		26.6			26.1			10.2			13.7	
Approach LOS		C			C			B			B	

Timer	1	2	3	4	5	6	7	8
Assigned Phs	1	2		4	5	6		8
Phs Duration (G+Y+Rc), s	57.8	33.0		9.3	4.5	46.2		9.3
Change Period (Y+Rc), s	4.0	6.0		5.0	4.0	6.0		5.0
Max Green Setting (Gmax), s	71.0	57.0		27.0	71.0	57.0		30.0
Max Q Clear Time (g_c+I1), s	13.1	14.3		2.8	2.4	8.0		3.7
Green Ext Time (p_c), s	0.8	12.6		0.1	0.0	9.7		0.1

Intersection Summary	
HCM 2010 Ctrl Delay	12.3
HCM 2010 LOS	B

Movement	EBL	EBT	EBR	WBL	WBT	WBR	NBL	NBT	NBR	SBL	SBT	SBR
Lane Configurations												
Traffic Volume (veh/h)	35	0	70	10	5	10	135	1140	20	15	1350	70
Future Volume (veh/h)	35	0	70	10	5	10	135	1140	20	15	1350	70
Number	3	8	18	7	4	14	1	6	16	5	2	12
Initial Q (Qb), veh	0	0	0	0	0	0	0	0	0	0	0	0
Ped-Bike Adj(A_pbT)	1.00		1.00	1.00		1.00	1.00		1.00	1.00		1.00
Parking Bus, Adj	1.00	1.00	1.00	1.00	1.00	1.00	1.00	1.00	1.00	1.00	1.00	1.00
Adj Sat Flow, veh/h/ln	1900	1863	1863	1900	1863	1900	1863	1863	1900	1863	1863	1863
Adj Flow Rate, veh/h	38	0	1	11	5	1	147	1239	21	16	1467	47
Adj No. of Lanes	0	1	1	0	1	0	1	2	0	1	2	1
Peak Hour Factor	0.92	0.92	0.92	0.92	0.92	0.92	0.92	0.92	0.92	0.92	0.92	0.92
Percent Heavy Veh, %	2	2	2	2	2	2	2	2	2	2	2	2
Cap, veh/h	174	0	74	114	22	3	185	2656	45	20	2311	1034
Arrive On Green	0.06	0.00	0.05	0.06	0.05	0.05	0.10	0.75	0.75	0.01	0.65	0.65
Sat Flow, veh/h	1552	0	1583	656	462	70	1774	3561	60	1774	3539	1583
Grp Volume(v), veh/h	38	0	1	17	0	0	147	615	645	16	1467	47
Grp Sat Flow(s),veh/h/ln	1552	0	1583	1188	0	0	1774	1770	1852	1774	1770	1583
Q Serve(g_s), s	0.0	0.0	0.0	0.3	0.0	0.0	5.8	9.7	9.7	0.6	17.6	0.8
Cycle Q Clear(g_c), s	1.5	0.0	0.0	1.7	0.0	0.0	5.8	9.7	9.7	0.6	17.6	0.8
Prop In Lane	1.00		1.00	0.65		0.06	1.00		0.03	1.00		1.00
Lane Grp Cap(c), veh/h	195	0	74	155	0	0	185	1320	1381	20	2311	1034
V/C Ratio(X)	0.19	0.00	0.01	0.11	0.00	0.00	0.79	0.47	0.47	0.79	0.63	0.05
Avail Cap(c_a), veh/h	581	0	510	576	0	0	521	2130	2229	273	3764	1684
HCM Platoon Ratio	1.00	1.00	1.00	1.00	1.00	1.00	1.00	1.00	1.00	1.00	1.00	1.00
Upstream Filter(I)	1.00	0.00	1.00	1.00	0.00	0.00	1.00	1.00	1.00	1.00	1.00	1.00
Uniform Delay (d), s/veh	32.7	0.0	32.5	32.8	0.0	0.0	31.3	3.5	3.5	35.2	7.4	4.4
Incr Delay (d2), s/veh	0.2	0.0	0.0	0.1	0.0	0.0	2.9	0.6	0.5	21.7	0.6	0.0
Initial Q Delay(d3),s/veh	0.0	0.0	0.0	0.0	0.0	0.0	0.0	0.0	0.0	0.0	0.0	0.0
%ile BackOfQ(50%),veh/ln	0.7	0.0	0.0	0.3	0.0	0.0	3.0	4.8	5.0	0.4	8.6	0.3
LnGrp Delay(d),s/veh	32.8	0.0	32.5	32.9	0.0	0.0	34.2	4.1	4.1	56.9	8.0	4.5
LnGrp LOS	C		C	C			C	A	A	E	A	A
Approach Vol, veh/h		39			17			1407			1530	
Approach Delay, s/veh		32.8			32.9			7.2			8.4	
Approach LOS		C			C			A			A	

Timer	1	2	3	4	5	6	7	8
Assigned Phs	1	2		4	5	6		8
Phs Duration (G+Y+Rc), s	11.5	51.7		8.4	4.8	58.3		8.4
Change Period (Y+Rc), s	4.0	5.0		5.0	4.0	5.0		5.0
Max Green Setting (Gmax), s	21.0	76.0		23.0	11.0	86.0		23.0
Max Q Clear Time (g_c+I1), s	7.8	19.6		3.7	2.6	11.7		3.5
Green Ext Time (p_c), s	0.1	27.1		0.0	0.0	20.0		0.0

Intersection Summary	
HCM 2010 Ctrl Delay	8.3
HCM 2010 LOS	A

Movement	EBL	EBT	EBR	WBL	WBT	WBR	NBL	NBT	NBR	SBL	SBT	SBR
Lane Configurations												
Traffic Volume (veh/h)	55	5	35	40	15	50	110	1280	60	30	1295	45
Future Volume (veh/h)	55	5	35	40	15	50	110	1280	60	30	1295	45
Number	3	8	18	7	4	14	1	6	16	5	2	12
Initial Q (Qb), veh	0	0	0	0	0	0	0	0	0	0	0	0
Ped-Bike Adj(A_pbT)	1.00		1.00	1.00		1.00	1.00		1.00	1.00		1.00
Parking Bus, Adj	1.00	1.00	1.00	1.00	1.00	1.00	1.00	1.00	1.00	1.00	1.00	1.00
Adj Sat Flow, veh/h/ln	1900	1863	1863	1863	1863	1900	1863	1863	1863	1863	1863	1863
Adj Flow Rate, veh/h	60	5	1	43	16	1	120	1391	49	33	1408	35
Adj No. of Lanes	0	1	1	1	1	0	1	2	1	1	2	1
Peak Hour Factor	0.92	0.92	0.92	0.92	0.92	0.92	0.92	0.92	0.92	0.92	0.92	0.92
Percent Heavy Veh, %	2	2	2	2	2	2	2	2	2	2	2	2
Cap, veh/h	160	12	153	111	168	10	142	2768	1238	43	2571	1150
Arrive On Green	0.10	0.10	0.10	0.10	0.10	0.10	0.08	0.78	0.78	0.02	0.73	0.73
Sat Flow, veh/h	1193	120	1578	1401	1735	108	1774	3539	1583	1774	3539	1583
Grp Volume(v), veh/h	65	0	1	43	0	17	120	1391	49	33	1408	35
Grp Sat Flow(s),veh/h/ln	1313	0	1578	1401	0	1843	1774	1770	1583	1774	1770	1583
Q Serve(g_s), s	6.6	0.0	0.1	4.7	0.0	1.3	10.3	21.9	1.1	2.9	28.0	1.0
Cycle Q Clear(g_c), s	7.9	0.0	0.1	12.5	0.0	1.3	10.3	21.9	1.1	2.9	28.0	1.0
Prop In Lane	0.92		1.00	1.00		0.06	1.00		1.00	1.00		1.00
Lane Grp Cap(c), veh/h	172	0	153	111	0	178	142	2768	1238	43	2571	1150
V/C Ratio(X)	0.38	0.00	0.01	0.39	0.00	0.10	0.85	0.50	0.04	0.76	0.55	0.03
Avail Cap(c_a), veh/h	254	0	244	192	0	285	240	2768	1238	240	2571	1150
HCM Platoon Ratio	1.00	1.00	1.00	1.00	1.00	1.00	1.00	1.00	1.00	1.00	1.00	1.00
Upstream Filter(I)	1.00	0.00	1.00	1.00	0.00	1.00	0.72	0.72	0.72	1.00	1.00	1.00
Uniform Delay (d), s/veh	67.3	0.0	63.3	72.8	0.0	63.8	70.4	6.1	3.8	75.2	9.6	5.9
Incr Delay (d2), s/veh	1.4	0.0	0.0	2.2	0.0	0.2	3.8	0.5	0.0	9.7	0.8	0.0
Initial Q Delay(d3),s/veh	0.0	0.0	0.0	0.0	0.0	0.0	0.0	0.0	0.0	0.0	0.0	0.0
%ile BackOfQ(50%),veh/ln	2.7	0.0	0.0	1.9	0.0	0.7	5.2	10.8	0.5	1.5	13.8	0.4
LnGrp Delay(d),s/veh	68.7	0.0	63.3	75.0	0.0	64.1	74.1	6.5	3.8	84.8	10.5	6.0
LnGrp LOS	E		E	E		E	E	A	A	F	B	A
Approach Vol, veh/h		66			60			1560			1476	
Approach Delay, s/veh		68.6			71.9			11.6			12.0	
Approach LOS		E			E			B			B	

Timer	1	2	3	4	5	6	7	8
Assigned Phs	1	2		4	5	6		8
Phs Duration (G+Y+Rc), s	16.4	118.6		20.0	7.8	127.2		20.0
Change Period (Y+Rc), s	4.0	6.0		5.0	4.0	6.0		5.0
Max Green Setting (Gmax), s	21.0	95.0		24.0	21.0	95.0		24.0
Max Q Clear Time (g_c+I1), s	12.3	30.0		14.5	4.9	23.9		9.9
Green Ext Time (p_c), s	0.1	26.5		0.1	0.0	27.1		0.1

Intersection Summary	
HCM 2010 Ctrl Delay	14.2
HCM 2010 LOS	B

Movement	EBL	EBT	EBR	WBL	WBT	WBR	NBL	NBT	NBR	SBL	SBT	SBR
Lane Configurations												
Traffic Volume (veh/h)	140	10	220	10	10	10	425	1355	15	85	1245	100
Future Volume (veh/h)	140	10	220	10	10	10	425	1355	15	85	1245	100
Number	3	8	18	7	4	14	1	6	16	5	2	12
Initial Q (Qb), veh	0	0	0	0	0	0	0	0	0	0	0	0
Ped-Bike Adj(A_pbT)	1.00		0.97	1.00		0.98	1.00		1.00	1.00		1.00
Parking Bus, Adj	1.00	1.00	1.00	1.00	1.00	1.00	1.00	1.00	1.00	1.00	1.00	1.00
Adj Sat Flow, veh/h/ln	1863	1863	1863	1900	1863	1900	1863	1863	1900	1863	1863	1863
Adj Flow Rate, veh/h	160	0	62	11	11	3	462	1473	16	92	1353	80
Adj No. of Lanes	2	0	2	0	1	0	2	2	0	1	2	1
Peak Hour Factor	0.92	0.92	0.92	0.92	0.92	0.92	0.92	0.92	0.92	0.92	0.92	0.92
Percent Heavy Veh, %	2	2	2	2	2	2	2	2	2	2	2	2
Cap, veh/h	334	0	820	61	61	17	606	2130	23	155	1787	931
Arrive On Green	0.09	0.00	0.09	0.08	0.08	0.05	0.18	0.59	0.58	0.09	0.50	0.50
Sat Flow, veh/h	3548	0	3074	783	783	214	3442	3587	39	1774	3539	1578
Grp Volume(v), veh/h	160	0	62	25	0	0	462	726	763	92	1353	80
Grp Sat Flow(s),veh/h/ln	1774	0	1537	1780	0	0	1721	1770	1856	1774	1770	1578
Q Serve(g_s), s	4.7	0.0	1.7	1.4	0.0	0.0	13.9	30.9	30.9	5.5	33.5	2.4
Cycle Q Clear(g_c), s	4.7	0.0	1.7	1.4	0.0	0.0	13.9	30.9	30.9	5.5	33.5	2.4
Prop In Lane	1.00		1.00	0.44		0.12	1.00		0.02	1.00		1.00
Lane Grp Cap(c), veh/h	334	0	820	139	0	0	606	1051	1102	155	1787	931
V/C Ratio(X)	0.48	0.00	0.08	0.18	0.00	0.00	0.76	0.69	0.69	0.60	0.76	0.09
Avail Cap(c_a), veh/h	1105	0	1487	505	0	0	1829	3145	3298	244	4896	2317
HCM Platoon Ratio	1.00	1.00	1.00	1.00	1.00	1.00	1.00	1.00	1.00	1.00	1.00	1.00
Upstream Filter(I)	1.00	0.00	1.00	1.00	0.00	0.00	1.00	1.00	1.00	1.00	1.00	1.00
Uniform Delay (d), s/veh	46.9	0.0	30.4	47.2	0.0	0.0	42.8	15.3	15.3	48.0	21.7	9.7
Incr Delay (d2), s/veh	0.4	0.0	0.0	0.6	0.0	0.0	0.8	1.2	1.1	1.4	1.0	0.1
Initial Q Delay(d3),s/veh	0.0	0.0	0.0	0.0	0.0	0.0	0.0	0.0	0.0	0.0	0.0	0.0
%ile BackOfQ(50%),veh/ln	2.3	0.0	0.7	0.7	0.0	0.0	6.7	15.3	16.0	2.7	16.4	1.3
LnGrp Delay(d),s/veh	47.3	0.0	30.4	47.8	0.0	0.0	43.5	16.4	16.4	49.3	22.6	9.7
LnGrp LOS	D		C	D			D	B	B	D	C	A
Approach Vol, veh/h		222			25			1951			1525	
Approach Delay, s/veh		42.6			47.8			22.8			23.6	
Approach LOS		D			D			C			C	

Timer	1	2	3	4	5	6	7	8
Assigned Phs	1	2		4	5	6		8
Phs Duration (G+Y+Rc), s	23.2	59.1		12.5	13.5	68.8		14.3
Change Period (Y+Rc), s	6.0	6.0		7.0	6.0	6.0		7.0
Max Green Setting (Gmax), s	56.0	149.0		28.0	13.0	192.0		31.0
Max Q Clear Time (g_c+I1), s	15.9	35.5		3.4	7.5	32.9		6.7
Green Ext Time (p_c), s	1.3	17.7		0.0	0.1	17.8		0.6

Intersection Summary	
HCM 2010 Ctrl Delay	24.5
HCM 2010 LOS	C

Notes

Movement	EBL	EBT	EBR	WBL	WBT	WBR	NBL	NBT	NBR	SBL	SBT	SBR
Lane Configurations												
Traffic Volume (veh/h)	5	5	5	60	0	45	5	1790	90	30	1445	5
Future Volume (veh/h)	5	5	5	60	0	45	5	1790	90	30	1445	5
Number	3	8	18	7	4	14	1	6	16	5	2	12
Initial Q (Qb), veh	0	0	0	0	0	0	0	0	0	0	0	0
Ped-Bike Adj(A_pbT)	0.98		0.97	0.98		0.97	1.00		1.00	1.00		1.00
Parking Bus, Adj	1.00	1.00	1.00	1.00	1.00	1.00	1.00	1.00	1.00	1.00	1.00	1.00
Adj Sat Flow, veh/h/ln	1900	1863	1900	1863	1863	1900	1863	1863	1900	1863	1863	1900
Adj Flow Rate, veh/h	5	5	1	65	0	1	5	1946	96	33	1571	5
Adj No. of Lanes	0	1	0	1	1	0	1	2	0	1	2	0
Peak Hour Factor	0.92	0.92	0.92	0.92	0.92	0.92	0.92	0.92	0.92	0.92	0.92	0.92
Percent Heavy Veh, %	2	2	2	2	2	2	2	2	2	2	2	2
Cap, veh/h	90	80	13	176	0	138	11	2710	133	63	2962	9
Arrive On Green	0.09	0.09	0.08	0.09	0.00	0.08	0.01	0.79	0.78	0.04	0.82	0.81
Sat Flow, veh/h	584	895	148	1372	0	1543	1774	3434	168	1774	3619	12
Grp Volume(v), veh/h	11	0	0	65	0	1	5	995	1047	33	768	808
Grp Sat Flow(s),veh/h/ln	1627	0	0	1372	0	1543	1774	1770	1833	1774	1770	1861
Q Serve(g_s), s	0.0	0.0	0.0	5.4	0.0	0.1	0.4	37.9	39.4	2.6	19.5	19.5
Cycle Q Clear(g_c), s	0.8	0.0	0.0	6.1	0.0	0.1	0.4	37.9	39.4	2.6	19.5	19.5
Prop In Lane	0.45		0.09	1.00		1.00	1.00		0.09	1.00		0.01
Lane Grp Cap(c), veh/h	183	0	0	176	0	138	11	1396	1446	63	1448	1523
V/C Ratio(X)	0.06	0.00	0.00	0.37	0.00	0.01	0.45	0.71	0.72	0.52	0.53	0.53
Avail Cap(c_a), veh/h	312	0	0	289	0	265	101	1396	1446	101	1448	1523
HCM Platoon Ratio	1.00	1.00	1.00	1.00	1.00	1.00	1.00	1.00	1.00	1.00	1.00	1.00
Upstream Filter(I)	1.00	0.00	0.00	1.00	0.00	1.00	0.61	0.61	0.61	1.00	1.00	1.00
Uniform Delay (d), s/veh	58.4	0.0	0.0	60.7	0.0	58.5	69.3	7.1	7.3	66.3	4.1	4.1
Incr Delay (d2), s/veh	0.1	0.0	0.0	1.3	0.0	0.0	6.2	1.9	2.0	2.5	1.4	1.3
Initial Q Delay(d3),s/veh	0.0	0.0	0.0	0.0	0.0	0.0	0.0	0.0	0.0	0.0	0.0	0.0
%ile BackOfQ(50%),veh/ln	0.4	0.0	0.0	2.5	0.0	0.0	0.2	19.0	20.3	1.3	9.9	10.4
LnGrp Delay(d),s/veh	58.6	0.0	0.0	62.0	0.0	58.6	75.6	9.0	9.3	68.8	5.5	5.4
LnGrp LOS	E			E		E	E	A	A	E	A	A
Approach Vol, veh/h		11			66			2047			1609	
Approach Delay, s/veh		58.6			62.0			9.3			6.7	
Approach LOS		E			E			A			A	

Timer	1	2	3	4	5	6	7	8
Assigned Phs	1	2		4	5	6		8
Phs Duration (G+Y+Rc), s	4.9	118.6		16.5	9.0	114.5		16.5
Change Period (Y+Rc), s	4.0	5.0		5.0	4.0	5.0		5.0
Max Green Setting (Gmax), s	8.0	95.0		23.0	8.0	95.0		23.0
Max Q Clear Time (g_c+I1), s	2.8	21.5		8.1	4.6	41.4		2.8
Green Ext Time (p_c), s	0.0	31.5		0.1	0.0	41.3		0.0

Intersection Summary	
HCM 2010 Ctrl Delay	9.3
HCM 2010 LOS	A

Movement	EBL	EBT	EBR	WBL	WBT	WBR	NBL	NBT	NBR	SBL	SBT	SBR
Lane Configurations												
Traffic Volume (veh/h)	90	5	5	105	15	15	5	1770	20	10	1280	195
Future Volume (veh/h)	90	5	5	105	15	15	5	1770	20	10	1280	195
Number	3	8	18	7	4	14	1	6	16	5	2	12
Initial Q (Qb), veh	0	0	0	0	0	0	0	0	0	0	0	0
Ped-Bike Adj(A_pbT)	1.00		1.00	1.00		1.00	1.00		1.00	1.00		1.00
Parking Bus, Adj	1.00	1.00	1.00	1.00	1.00	1.00	1.00	1.00	1.00	1.00	1.00	1.00
Adj Sat Flow, veh/h/ln	1900	1863	1900	1900	1863	1900	1863	1863	1900	1863	1863	1863
Adj Flow Rate, veh/h	98	5	3	114	16	12	5	1924	21	11	1391	151
Adj No. of Lanes	0	1	0	0	1	0	1	2	0	1	2	1
Peak Hour Factor	0.92	0.92	0.92	0.92	0.92	0.92	0.92	0.92	0.92	0.92	0.92	0.92
Percent Heavy Veh, %	2	2	2	2	2	2	2	2	2	2	2	2
Cap, veh/h	210	8	5	198	20	15	7	2806	31	14	2782	1245
Arrive On Green	0.11	0.11	0.10	0.11	0.11	0.10	0.00	0.78	0.77	0.01	0.79	0.79
Sat Flow, veh/h	1387	71	42	1312	184	138	1774	3586	39	1774	3539	1583
Grp Volume(v), veh/h	106	0	0	142	0	0	5	948	997	11	1391	151
Grp Sat Flow(s),veh/h/ln	1500	0	0	1634	0	0	1774	1770	1856	1774	1770	1583
Q Serve(g_s), s	0.0	0.0	0.0	1.8	0.0	0.0	0.3	30.1	30.4	0.7	16.6	2.7
Cycle Q Clear(g_c), s	7.9	0.0	0.0	9.8	0.0	0.0	0.3	30.1	30.4	0.7	16.6	2.7
Prop In Lane	0.92		0.03	0.80		0.08	1.00		0.02	1.00		1.00
Lane Grp Cap(c), veh/h	223	0	0	234	0	0	7	1384	1452	14	2782	1245
V/C Ratio(X)	0.48	0.00	0.00	0.61	0.00	0.00	0.73	0.68	0.69	0.81	0.50	0.12
Avail Cap(c_a), veh/h	430	0	0	450	0	0	118	1384	1452	118	2782	1245
HCM Platoon Ratio	1.00	1.00	1.00	1.00	1.00	1.00	1.00	1.00	1.00	1.00	1.00	1.00
Upstream Filter(I)	1.00	0.00	0.00	1.00	0.00	0.00	0.62	0.62	0.62	0.84	0.84	0.84
Uniform Delay (d), s/veh	51.1	0.0	0.0	51.8	0.0	0.0	59.7	6.1	6.2	59.5	4.5	3.0
Incr Delay (d2), s/veh	1.6	0.0	0.0	2.5	0.0	0.0	29.2	1.7	1.7	28.3	0.5	0.2
Initial Q Delay(d3),s/veh	0.0	0.0	0.0	0.0	0.0	0.0	0.0	0.0	0.0	0.0	0.0	0.0
%ile BackOfQ(50%),veh/ln	3.5	0.0	0.0	4.7	0.0	0.0	0.2	15.1	15.9	0.5	8.1	1.2
LnGrp Delay(d),s/veh	52.6	0.0	0.0	54.3	0.0	0.0	88.9	7.8	7.8	87.7	5.1	3.2
LnGrp LOS	D			D			F	A	A	F	A	A
Approach Vol, veh/h		106			142			1950			1553	
Approach Delay, s/veh		52.6			54.3			8.0			5.5	
Approach LOS		D			D			A			A	

Timer	1	2	3	4	5	6	7	8
Assigned Phs	1	2		4	5	6		8
Phs Duration (G+Y+Rc), s	4.5	98.3		17.2	4.9	97.9		17.2
Change Period (Y+Rc), s	4.0	5.0		5.0	4.0	5.0		5.0
Max Green Setting (Gmax), s	8.0	68.0		30.0	8.0	68.0		30.0
Max Q Clear Time (g_c+I1), s	2.3	18.6		11.8	2.7	32.4		9.9
Green Ext Time (p_c), s	0.0	32.4		0.5	0.0	31.8		0.3

Intersection Summary	
HCM 2010 Ctrl Delay	10.0
HCM 2010 LOS	A

Movement	EBL	EBT	EBR	WBL	WBT	WBR	NBL	NBT	NBR	SBL	SBT	SBR
Lane Configurations												
Traffic Volume (veh/h)	150	30	20	145	25	35	25	1590	75	10	1315	75
Future Volume (veh/h)	150	30	20	145	25	35	25	1590	75	10	1315	75
Number	3	8	18	7	4	14	1	6	16	5	2	12
Initial Q (Qb), veh	0	0	0	0	0	0	0	0	0	0	0	0
Ped-Bike Adj(A_pbT)	0.99		0.98	0.99		0.98	1.00		1.00	1.00		1.00
Parking Bus, Adj	1.00	1.00	1.00	1.00	1.00	1.00	1.00	1.00	1.00	1.00	1.00	1.00
Adj Sat Flow, veh/h/ln	1900	1863	1863	1863	1863	1900	1863	1863	1900	1863	1863	1900
Adj Flow Rate, veh/h	163	33	2	158	27	5	27	1728	80	11	1429	79
Adj No. of Lanes	0	1	1	1	1	0	1	2	0	1	2	0
Peak Hour Factor	0.92	0.92	0.92	0.92	0.92	0.92	0.92	0.92	0.92	0.92	0.92	0.92
Percent Heavy Veh, %	2	2	2	2	2	2	2	2	2	2	2	2
Cap, veh/h	234	38	270	313	264	49	34	2528	116	13	2462	136
Arrive On Green	0.17	0.17	0.17	0.17	0.17	0.17	0.04	1.00	1.00	0.01	0.72	0.71
Sat Flow, veh/h	1077	218	1559	1359	1525	282	1774	3446	159	1774	3411	188
Grp Volume(v), veh/h	196	0	2	158	0	32	27	883	925	11	739	769
Grp Sat Flow(s),veh/h/ln	1295	0	1559	1359	0	1807	1774	1770	1835	1774	1770	1830
Q Serve(g_s), s	18.9	0.0	0.1	0.0	0.0	2.1	2.1	0.0	0.0	0.9	27.9	28.3
Cycle Q Clear(g_c), s	21.0	0.0	0.1	13.3	0.0	2.1	2.1	0.0	0.0	0.9	27.9	28.3
Prop In Lane	0.83		1.00	1.00		0.16	1.00		0.09	1.00		0.10
Lane Grp Cap(c), veh/h	272	0	270	313	0	313	34	1298	1346	13	1277	1321
V/C Ratio(X)	0.72	0.00	0.01	0.50	0.00	0.10	0.79	0.68	0.69	0.83	0.58	0.58
Avail Cap(c_a), veh/h	309	0	312	350	0	361	139	1298	1346	139	1277	1321
HCM Platoon Ratio	1.00	1.00	1.00	1.00	1.00	1.00	2.00	2.00	2.00	1.00	1.00	1.00
Upstream Filter(I)	1.00	0.00	1.00	1.00	0.00	1.00	0.45	0.45	0.45	0.84	0.84	0.84
Uniform Delay (d), s/veh	57.5	0.0	47.9	53.3	0.0	48.8	67.0	0.0	0.0	69.4	9.3	9.4
Incr Delay (d2), s/veh	6.9	0.0	0.0	1.3	0.0	0.1	6.9	1.3	1.3	32.0	1.6	1.6
Initial Q Delay(d3),s/veh	0.0	0.0	0.0	0.0	0.0	0.0	0.0	0.0	0.0	0.0	0.0	0.0
%ile BackOfQ(50%),veh/ln	7.9	0.0	0.1	5.7	0.0	1.1	1.1	0.5	0.5	0.5	14.1	14.7
LnGrp Delay(d),s/veh	64.5	0.0	47.9	54.6	0.0	48.9	74.0	1.3	1.3	101.4	10.9	11.0
LnGrp LOS	E		D	D		D	E	A	A	F	B	B
Approach Vol, veh/h		198			190			1835			1519	
Approach Delay, s/veh		64.3			53.6			2.4			11.6	
Approach LOS		E			D			A			B	

Timer	1	2	3	4	5	6	7	8
Assigned Phs	1	2		4	5	6		8
Phs Duration (G+Y+Rc), s	6.7	105.1		28.3	5.0	106.7		28.3
Change Period (Y+Rc), s	4.0	5.0		5.0	4.0	5.0		5.0
Max Green Setting (Gmax), s	11.0	88.0		27.0	11.0	88.0		27.0
Max Q Clear Time (g_c+I1), s	4.1	30.3		15.3	2.9	2.0		23.0
Green Ext Time (p_c), s	0.0	26.5		0.5	0.0	45.3		0.3

Intersection Summary	
HCM 2010 Ctrl Delay	12.0
HCM 2010 LOS	B

Movement	EBL	EBT	EBR	WBL	WBT	WBR	NBL	NBT	NBR	SBL	SBT	SBR
Lane Configurations												
Traffic Volume (veh/h)	15	110	35	95	75	730	25	885	120	535	890	20
Future Volume (veh/h)	15	110	35	95	75	730	25	885	120	535	890	20
Number	7	4	14	3	8	18	1	6	16	5	2	12
Initial Q (Qb), veh	0	0	0	0	0	0	0	0	0	0	0	0
Ped-Bike Adj(A_pbT)	0.99		0.99	0.99		0.99	1.00		1.00	1.00		1.00
Parking Bus, Adj	1.00	1.00	1.00	1.00	1.00	1.00	1.00	1.00	1.00	1.00	1.00	1.00
Adj Sat Flow, veh/h/ln	1900	1863	1863	1863	1863	1863	1863	1863	1863	1863	1863	1900
Adj Flow Rate, veh/h	16	120	5	103	82	459	27	962	52	582	967	21
Adj No. of Lanes	0	1	1	1	1	1	1	2	1	2	2	0
Peak Hour Factor	0.92	0.92	0.92	0.92	0.92	0.92	0.92	0.92	0.92	0.92	0.92	0.92
Percent Heavy Veh, %	2	2	2	2	2	2	2	2	2	2	2	2
Cap, veh/h	54	359	347	369	588	496	34	1465	652	635	2051	45
Arrive On Green	0.22	0.22	0.22	0.07	0.32	0.32	0.02	0.41	0.41	0.37	1.00	1.00
Sat Flow, veh/h	113	1617	1564	1774	1863	1570	1774	3539	1576	3442	3542	77
Grp Volume(v), veh/h	136	0	5	103	82	459	27	962	52	582	483	505
Grp Sat Flow(s),veh/h/ln	1730	0	1564	1774	1863	1570	1774	1770	1576	1721	1770	1849
Q Serve(g_s), s	0.0	0.0	0.3	6.0	4.4	39.6	2.1	30.6	2.8	22.6	0.0	0.0
Cycle Q Clear(g_c), s	8.6	0.0	0.3	6.0	4.4	39.6	2.1	30.6	2.8	22.6	0.0	0.0
Prop In Lane	0.12		1.00	1.00		1.00	1.00		1.00	1.00		0.04
Lane Grp Cap(c), veh/h	413	0	347	369	588	496	34	1465	652	635	1025	1071
V/C Ratio(X)	0.33	0.00	0.01	0.28	0.14	0.93	0.79	0.66	0.08	0.92	0.47	0.47
Avail Cap(c_a), veh/h	413	0	347	544	665	561	177	1465	652	836	1025	1071
HCM Platoon Ratio	1.00	1.00	1.00	1.00	1.00	1.00	1.00	1.00	1.00	2.00	2.00	2.00
Upstream Filter(I)	1.00	0.00	1.00	1.00	1.00	1.00	0.79	0.79	0.79	0.71	0.71	0.71
Uniform Delay (d), s/veh	45.7	0.0	42.5	36.7	34.3	46.3	68.4	33.0	24.9	43.1	0.0	0.0
Incr Delay (d2), s/veh	0.5	0.0	0.0	0.4	0.1	20.2	11.4	1.8	0.2	8.0	1.1	1.1
Initial Q Delay(d3),s/veh	0.0	0.0	0.0	0.0	0.0	0.0	0.0	0.0	0.0	0.0	0.0	0.0
%ile BackOfQ(50%),veh/ln	4.5	0.0	0.2	3.0	2.3	20.0	1.2	15.3	1.2	11.4	0.3	0.3
LnGrp Delay(d),s/veh	46.2	0.0	42.5	37.1	34.4	66.5	79.8	34.9	25.1	51.2	1.1	1.1
LnGrp LOS	D		D	D	C	E	E	C	C	D	A	A
Approach Vol, veh/h		141			644			1041			1570	
Approach Delay, s/veh		46.0			57.7			35.5			19.7	
Approach LOS		D			E			D			B	

Timer	1	2	3	4	5	6	7	8
Assigned Phs	1	2	3	4	5	6		8
Phs Duration (G+Y+Rc), s	6.7	85.1	13.1	35.1	29.8	61.9		48.2
Change Period (Y+Rc), s	4.0	5.0	5.0	5.0	4.0	5.0		5.0
Max Green Setting (Gmax), s	14.0	63.0	22.0	22.0	34.0	43.0		49.0
Max Q Clear Time (g_c+I1), s	4.1	2.0	8.0	10.6	24.6	32.6		41.6
Green Ext Time (p_c), s	0.0	12.7	0.3	0.4	1.3	6.1		1.6

Intersection Summary	
HCM 2010 Ctrl Delay	32.8
HCM 2010 LOS	C

Notes

Intersection	
Int Delay, s/veh	0.1

Movement	WBL	WBR	NBT	NBR	SBL	SBT
Lane Configurations		↱	↑	↱		↑
Traffic Vol, veh/h	0	15	700	25	0	820
Future Vol, veh/h	0	15	700	25	0	820
Conflicting Peds, #/hr	0	0	0	0	0	0
Sign Control	Stop	Stop	Free	Free	Free	Free
RT Channelized	-	None	-	None	-	None
Storage Length	-	0	-	0	-	-
Veh in Median Storage, #	0	-	0	-	-	0
Grade, %	0	-	0	-	-	0
Peak Hour Factor	92	92	92	92	92	92
Heavy Vehicles, %	2	2	2	2	2	2
Mvmt Flow	0	16	761	27	0	891

Major/Minor	Minor1		Major1		Major2	
Conflicting Flow All	-	761	0	0	-	-
Stage 1	-	-	-	-	-	-
Stage 2	-	-	-	-	-	-
Critical Hdwy	-	6.22	-	-	-	-
Critical Hdwy Stg 1	-	-	-	-	-	-
Critical Hdwy Stg 2	-	-	-	-	-	-
Follow-up Hdwy	-	3.318	-	-	-	-
Pot Cap-1 Maneuver	0	405	-	-	0	-
Stage 1	0	-	-	-	0	-
Stage 2	0	-	-	-	0	-
Platoon blocked, %			-	-		-
Mov Cap-1 Maneuver	-	405	-	-	-	-
Mov Cap-2 Maneuver	-	-	-	-	-	-
Stage 1	-	-	-	-	-	-
Stage 2	-	-	-	-	-	-

Approach	WB	NB	SB
HCM Control Delay, s	14.3	0	0
HCM LOS	B		

Minor Lane/Major Mvmt	NBT	NBR	WBLn1	SBT
Capacity (veh/h)	-	-	405	-
HCM Lane V/C Ratio	-	-	0.04	-
HCM Control Delay (s)	-	-	14.3	-
HCM Lane LOS	-	-	B	-
HCM 95th %tile Q(veh)	-	-	0.1	-

Intersection	
Int Delay, s/veh	4.6

Movement	EBL	EBT	EBR	WBL	WBT	WBR	NBL	NBT	NBR	SBL	SBT	SBR
Lane Configurations												
Traffic Vol, veh/h	45	40	30	5	95	5	35	5	5	5	5	60
Future Vol, veh/h	45	40	30	5	95	5	35	5	5	5	5	60
Conflicting Peds, #/hr	0	0	0	0	0	0	0	0	0	0	0	0
Sign Control	Free	Free	Free	Free	Free	Free	Stop	Stop	Stop	Stop	Stop	Stop
RT Channelized	-	-	None	-	-	None	-	-	None	-	-	None
Storage Length	100	-	-	100	-	-	-	-	-	-	-	-
Veh in Median Storage, #	-	0	-	-	0	-	-	0	-	-	0	-
Grade, %	-	0	-	-	0	-	-	0	-	-	0	-
Peak Hour Factor	92	92	92	92	92	92	92	92	92	92	92	92
Heavy Vehicles, %	2	2	2	2	2	2	2	2	2	2	2	2
Mvmt Flow	49	43	33	5	103	5	38	5	5	5	5	65

Major/Minor	Major1			Major2			Minor1			Minor2		
Conflicting Flow All	108	0	0	76	0	0	309	276	60	279	290	106
Stage 1	-	-	-	-	-	-	158	158	-	116	116	-
Stage 2	-	-	-	-	-	-	151	118	-	163	174	-
Critical Hdwy	4.12	-	-	4.12	-	-	7.12	6.52	6.22	7.12	6.52	6.22
Critical Hdwy Stg 1	-	-	-	-	-	-	6.12	5.52	-	6.12	5.52	-
Critical Hdwy Stg 2	-	-	-	-	-	-	6.12	5.52	-	6.12	5.52	-
Follow-up Hdwy	2.218	-	-	2.218	-	-	3.518	4.018	3.318	3.518	4.018	3.318
Pot Cap-1 Maneuver	1483	-	-	1523	-	-	643	632	1005	673	620	948
Stage 1	-	-	-	-	-	-	844	767	-	889	800	-
Stage 2	-	-	-	-	-	-	851	798	-	839	755	-
Platoon blocked, %		-	-		-	-						
Mov Cap-1 Maneuver	1483	-	-	1523	-	-	578	609	1005	647	598	948
Mov Cap-2 Maneuver	-	-	-	-	-	-	578	609	-	647	598	-
Stage 1	-	-	-	-	-	-	816	742	-	860	798	-
Stage 2	-	-	-	-	-	-	784	796	-	801	730	-

Approach	EB	WB	NB	SB
HCM Control Delay, s	2.9	0.4	11.4	9.5
HCM LOS			B	A

Minor Lane/Major Mvmt	NBLn1	EBL	EBT	EBR	WBL	WBT	WBR	SBLn1
Capacity (veh/h)	610	1483	-	-	1523	-	-	882
HCM Lane V/C Ratio	0.08	0.033	-	-	0.004	-	-	0.086
HCM Control Delay (s)	11.4	7.5	-	-	7.4	-	-	9.5
HCM Lane LOS	B	A	-	-	A	-	-	A
HCM 95th %tile Q(veh)	0.3	0.1	-	-	0	-	-	0.3

Intersection	
Int Delay, s/veh	4.4

Movement	EBL	EBT	EBR	WBL	WBT	WBR	NBL	NBT	NBR	SBL	SBT	SBR
Lane Configurations												
Traffic Vol, veh/h	10	20	20	5	10	5	0	5	5	5	5	25
Future Vol, veh/h	10	20	20	5	10	5	0	5	5	5	5	25
Conflicting Peds, #/hr	0	0	0	0	0	0	0	0	0	0	0	0
Sign Control	Free	Free	Free	Free	Free	Free	Stop	Stop	Stop	Stop	Stop	Stop
RT Channelized	-	-	None	-	-	None	-	-	None	-	-	None
Storage Length	-	-	-	-	-	-	-	-	-	-	-	-
Veh in Median Storage, #	-	0	-	-	0	-	-	0	-	-	0	-
Grade, %	-	0	-	-	0	-	-	0	-	-	0	-
Peak Hour Factor	92	92	92	92	92	92	92	92	92	92	92	92
Heavy Vehicles, %	2	2	2	2	2	2	2	2	2	2	2	2
Mvmt Flow	11	22	22	5	11	5	0	5	5	5	5	27

Major/Minor	Major1			Major2			Minor1			Minor2		
Conflicting Flow All	16	0	0	44	0	0	95	81	33	84	90	14
Stage 1	-	-	-	-	-	-	55	55	-	24	24	-
Stage 2	-	-	-	-	-	-	40	26	-	60	66	-
Critical Hdwy	4.12	-	-	4.12	-	-	7.12	6.52	6.22	7.12	6.52	6.22
Critical Hdwy Stg 1	-	-	-	-	-	-	6.12	5.52	-	6.12	5.52	-
Critical Hdwy Stg 2	-	-	-	-	-	-	6.12	5.52	-	6.12	5.52	-
Follow-up Hdwy	2.218	-	-	2.218	-	-	3.518	4.018	3.318	3.518	4.018	3.318
Pot Cap-1 Maneuver	1602	-	-	1564	-	-	888	809	1041	903	800	1066
Stage 1	-	-	-	-	-	-	957	849	-	994	875	-
Stage 2	-	-	-	-	-	-	975	874	-	951	840	-
Platoon blocked, %		-	-		-	-						
Mov Cap-1 Maneuver	1602	-	-	1564	-	-	854	801	1041	887	792	1066
Mov Cap-2 Maneuver	-	-	-	-	-	-	854	801	-	887	792	-
Stage 1	-	-	-	-	-	-	950	843	-	987	872	-
Stage 2	-	-	-	-	-	-	941	871	-	933	834	-

Approach	EB	WB	NB	SB
HCM Control Delay, s	1.5	1.8	9	8.8
HCM LOS			A	A

Minor Lane/Major Mvmt	NBLn1	EBL	EBT	EBR	WBL	WBT	WBR	SBLn1
Capacity (veh/h)	905	1602	-	-	1564	-	-	989
HCM Lane V/C Ratio	0.012	0.007	-	-	0.003	-	-	0.038
HCM Control Delay (s)	9	7.3	0	-	7.3	0	-	8.8
HCM Lane LOS	A	A	A	-	A	A	-	A
HCM 95th %tile Q(veh)	0	0	-	-	0	-	-	0.1

APPENDIX C

LEVEL OF SERVICE CALCULATIONS

- Future Year 2022 Scenario 2 PM Peak

HCM 2010 Signalized Intersection Summary
1: Napilihau Street

10/05/2017

Movement	EBL	EBT	EBR	WBL	WBT	WBR	NBL	NBT	NBR	SBL	SBT	SBR
Lane Configurations												
Traffic Volume (veh/h)	55	25	400	60	25	5	410	230	65	10	300	75
Future Volume (veh/h)	55	25	400	60	25	5	410	230	65	10	300	75
Number	7	4	14	3	8	18	5	2	12	1	6	16
Initial Q (Qb), veh	0	0	0	0	0	0	0	0	0	0	0	0
Ped-Bike Adj(A_pbT)	1.00		1.00	1.00		1.00	1.00		1.00	1.00		1.00
Parking Bus, Adj	1.00	1.00	1.00	1.00	1.00	1.00	1.00	1.00	1.00	1.00	1.00	1.00
Adj Sat Flow, veh/h/ln	1900	1863	1863	1863	1863	1900	1863	1863	1863	1863	1863	1863
Adj Flow Rate, veh/h	60	27	28	65	27	1	446	250	45	11	326	21
Adj No. of Lanes	0	1	1	1	1	0	1	1	1	1	1	1
Peak Hour Factor	0.92	0.92	0.92	0.92	0.92	0.92	0.92	0.92	0.92	0.92	0.92	0.92
Percent Heavy Veh, %	2	2	2	2	2	2	2	2	2	2	2	2
Cap, veh/h	219	66	175	216	198	7	530	1061	902	15	521	443
Arrive On Green	0.11	0.11	0.11	0.11	0.11	0.11	0.30	0.57	0.57	0.01	0.28	0.28
Sat Flow, veh/h	906	599	1583	1343	1785	66	1774	1863	1583	1774	1863	1583
Grp Volume(v), veh/h	87	0	28	65	0	28	446	250	45	11	326	21
Grp Sat Flow(s),veh/h/ln	1504	0	1583	1343	0	1851	1774	1863	1583	1774	1863	1583
Q Serve(g_s), s	2.1	0.0	0.8	2.5	0.0	0.7	12.1	3.4	0.6	0.3	7.9	0.5
Cycle Q Clear(g_c), s	2.8	0.0	0.8	5.3	0.0	0.7	12.1	3.4	0.6	0.3	7.9	0.5
Prop In Lane	0.69		1.00	1.00		0.04	1.00		1.00	1.00		1.00
Lane Grp Cap(c), veh/h	285	0	175	216	0	205	530	1061	902	15	521	443
V/C Ratio(X)	0.31	0.00	0.16	0.30	0.00	0.14	0.84	0.24	0.05	0.73	0.63	0.05
Avail Cap(c_a), veh/h	818	0	739	694	0	864	1035	2861	2432	517	2318	1970
HCM Platoon Ratio	1.00	1.00	1.00	1.00	1.00	1.00	1.00	1.00	1.00	1.00	1.00	1.00
Upstream Filter(I)	1.00	0.00	1.00	1.00	0.00	1.00	1.00	1.00	1.00	1.00	1.00	1.00
Uniform Delay (d), s/veh	21.6	0.0	20.7	24.1	0.0	20.6	16.9	5.5	4.9	25.4	16.2	13.5
Incr Delay (d2), s/veh	0.6	0.0	0.4	0.8	0.0	0.3	3.7	0.2	0.0	49.8	2.6	0.1
Initial Q Delay(d3),s/veh	0.0	0.0	0.0	0.0	0.0	0.0	0.0	0.0	0.0	0.0	0.0	0.0
%ile BackOfQ(50%),veh/ln	1.2	0.0	0.4	0.9	0.0	0.4	6.4	1.8	0.3	0.4	4.4	0.2
LnGrp Delay(d),s/veh	22.2	0.0	21.1	24.8	0.0	20.9	20.6	5.7	4.9	75.2	18.8	13.6
LnGrp LOS	C		C	C		C	C	A	A	E	B	B
Approach Vol, veh/h		115			93			741			358	
Approach Delay, s/veh		21.9			23.7			14.6			20.2	
Approach LOS		C			C			B			C	

Timer	1	2	3	4	5	6	7	8
Assigned Phs	1	2		4	5	6		8
Phs Duration (G+Y+Rc), s	5.4	35.3		10.7	20.4	20.4		10.7
Change Period (Y+Rc), s	5.0	6.0		5.0	5.0	6.0		5.0
Max Green Setting (Gmax), s	15.0	79.0		24.0	30.0	64.0		24.0
Max Q Clear Time (g_c+I1), s	2.3	5.4		4.8	14.1	9.9		7.3
Green Ext Time (p_c), s	0.0	3.6		0.5	1.3	4.5		0.2

Intersection Summary	
HCM 2010 Ctrl Delay	17.5
HCM 2010 LOS	B

Movement	EBL	EBT	EBR	WBL	WBT	WBR	NBL	NBT	NBR	SBL	SBT	SBR
Lane Configurations												
Traffic Volume (veh/h)	75	20	165	50	15	10	215	635	45	25	630	80
Future Volume (veh/h)	75	20	165	50	15	10	215	635	45	25	630	80
Number	7	4	14	3	8	18	5	2	12	1	6	16
Initial Q (Qb), veh	0	0	0	0	0	0	0	0	0	0	0	0
Ped-Bike Adj(A_pbT)	1.00		1.00	1.00		1.00	1.00		1.00	1.00		1.00
Parking Bus, Adj	1.00	1.00	1.00	1.00	1.00	1.00	1.00	1.00	1.00	1.00	1.00	1.00
Adj Sat Flow, veh/h/ln	1900	1863	1863	1863	1863	1900	1863	1863	1863	1863	1863	1863
Adj Flow Rate, veh/h	82	22	14	54	16	1	234	690	0	27	685	47
Adj No. of Lanes	0	1	1	1	1	0	1	1	1	1	1	1
Peak Hour Factor	0.92	0.92	0.92	0.92	0.92	0.92	0.92	0.92	0.92	0.92	0.92	0.92
Percent Heavy Veh, %	2	2	2	2	2	2	2	2	2	2	2	2
Cap, veh/h	265	57	211	233	231	14	425	1013	861	376	852	721
Arrive On Green	0.13	0.13	0.13	0.13	0.13	0.13	0.11	0.54	0.00	0.02	0.46	0.46
Sat Flow, veh/h	1070	429	1583	1367	1735	108	1774	1863	1583	1774	1863	1576
Grp Volume(v), veh/h	104	0	14	54	0	17	234	690	0	27	685	47
Grp Sat Flow(s),veh/h/ln	1499	0	1583	1367	0	1844	1774	1863	1583	1774	1863	1576
Q Serve(g_s), s	2.8	0.0	0.4	2.0	0.0	0.4	3.3	14.1	0.0	0.4	16.6	0.9
Cycle Q Clear(g_c), s	3.3	0.0	0.4	5.3	0.0	0.4	3.3	14.1	0.0	0.4	16.6	0.9
Prop In Lane	0.79		1.00	1.00		0.06	1.00		1.00	1.00		1.00
Lane Grp Cap(c), veh/h	322	0	211	233	0	246	425	1013	861	376	852	721
V/C Ratio(X)	0.32	0.00	0.07	0.23	0.00	0.07	0.55	0.68	0.00	0.07	0.80	0.07
Avail Cap(c_a), veh/h	824	0	752	700	0	876	745	1805	1534	849	1805	1528
HCM Platoon Ratio	1.00	1.00	1.00	1.00	1.00	1.00	1.00	1.00	1.00	1.00	1.00	1.00
Upstream Filter(I)	1.00	0.00	1.00	1.00	0.00	1.00	1.00	1.00	0.00	1.00	1.00	1.00
Uniform Delay (d), s/veh	21.1	0.0	19.9	23.7	0.0	19.9	9.7	8.7	0.0	8.2	12.2	8.0
Incr Delay (d2), s/veh	0.6	0.0	0.1	0.5	0.0	0.1	1.1	0.8	0.0	0.1	1.8	0.0
Initial Q Delay(d3),s/veh	0.0	0.0	0.0	0.0	0.0	0.0	0.0	0.0	0.0	0.0	0.0	0.0
%ile BackOfQ(50%),veh/ln	1.4	0.0	0.2	0.8	0.0	0.2	1.8	7.3	0.0	0.2	8.8	0.4
LnGrp Delay(d),s/veh	21.7	0.0	20.1	24.2	0.0	20.1	10.8	9.5	0.0	8.3	14.1	8.0
LnGrp LOS	C		C	C		C	B	A		A	B	A
Approach Vol, veh/h		118			71			924			759	
Approach Delay, s/veh		21.5			23.2			9.8			13.5	
Approach LOS		C			C			A			B	

Timer	1	2	3	4	5	6	7	8
Assigned Phs	1	2		4	5	6		8
Phs Duration (G+Y+Rc), s	6.0	34.6		12.0	10.5	30.1		12.0
Change Period (Y+Rc), s	5.0	6.0		5.0	5.0	6.0		5.0
Max Green Setting (Gmax), s	15.0	51.0		25.0	15.0	51.0		25.0
Max Q Clear Time (g_c+I1), s	2.4	16.1		5.3	5.3	18.6		7.3
Green Ext Time (p_c), s	0.0	5.3		0.5	0.5	5.4		0.2

Intersection Summary	
HCM 2010 Ctrl Delay	12.6
HCM 2010 LOS	B

Movement	EBL	EBT	EBR	WBL	WBT	WBR	NBL	NBT	NBR	SBL	SBT	SBR
Lane Configurations												
Traffic Volume (veh/h)	60	45	95	120	45	55	165	845	115	100	745	75
Future Volume (veh/h)	60	45	95	120	45	55	165	845	115	100	745	75
Number	7	4	14	3	8	18	5	2	12	1	6	16
Initial Q (Qb), veh	0	0	0	0	0	0	0	0	0	0	0	0
Ped-Bike Adj(A_pbT)	1.00		0.97	1.00		0.99	1.00		1.00	1.00		1.00
Parking Bus, Adj	1.00	1.00	1.00	1.00	1.00	1.00	1.00	1.00	1.00	1.00	1.00	1.00
Adj Sat Flow, veh/h/ln	1863	1863	1900	1863	1863	1863	1863	1863	1863	1863	1863	1863
Adj Flow Rate, veh/h	65	49	48	130	49	6	179	918	79	109	810	36
Adj No. of Lanes	1	1	0	1	1	1	1	1	1	1	1	1
Peak Hour Factor	0.92	0.92	0.92	0.92	0.92	0.92	0.92	0.92	0.92	0.92	0.92	0.92
Percent Heavy Veh, %	2	2	2	2	2	2	2	2	2	2	2	2
Cap, veh/h	85	94	92	161	286	239	214	992	843	138	913	774
Arrive On Green	0.05	0.11	0.11	0.09	0.15	0.15	0.12	0.53	0.53	0.08	0.49	0.49
Sat Flow, veh/h	1774	850	833	1774	1863	1562	1774	1863	1583	1774	1863	1580
Grp Volume(v), veh/h	65	0	97	130	49	6	179	918	79	109	810	36
Grp Sat Flow(s),veh/h/ln	1774	0	1684	1774	1863	1562	1774	1863	1583	1774	1863	1580
Q Serve(g_s), s	3.8	0.0	5.8	7.6	2.4	0.3	10.5	48.2	2.6	6.4	41.6	1.3
Cycle Q Clear(g_c), s	3.8	0.0	5.8	7.6	2.4	0.3	10.5	48.2	2.6	6.4	41.6	1.3
Prop In Lane	1.00		0.49	1.00		1.00	1.00		1.00	1.00		1.00
Lane Grp Cap(c), veh/h	85	0	186	161	286	239	214	992	843	138	913	774
V/C Ratio(X)	0.77	0.00	0.52	0.81	0.17	0.03	0.84	0.93	0.09	0.79	0.89	0.05
Avail Cap(c_a), veh/h	335	0	333	335	369	309	418	1142	971	418	1142	969
HCM Platoon Ratio	1.00	1.00	1.00	1.00	1.00	1.00	1.00	1.00	1.00	1.00	1.00	1.00
Upstream Filter(I)	1.00	0.00	1.00	1.00	1.00	1.00	1.00	1.00	1.00	1.00	1.00	1.00
Uniform Delay (d), s/veh	49.9	0.0	44.5	47.3	39.0	38.1	45.6	22.9	12.2	48.0	24.4	14.1
Incr Delay (d2), s/veh	13.4	0.0	2.3	9.1	0.3	0.0	8.4	11.6	0.0	9.5	7.4	0.0
Initial Q Delay(d3),s/veh	0.0	0.0	0.0	0.0	0.0	0.0	0.0	0.0	0.0	0.0	0.0	0.0
%ile BackOfQ(50%),veh/ln	2.2	0.0	2.8	4.1	1.3	0.2	5.6	27.7	1.1	3.5	23.0	0.6
LnGrp Delay(d),s/veh	63.3	0.0	46.8	56.4	39.3	38.2	54.1	34.5	12.3	57.5	31.8	14.1
LnGrp LOS	E		D	E	D	D	D	C	B	E	C	B
Approach Vol, veh/h		162			185			1176			955	
Approach Delay, s/veh		53.4			51.3			36.0			34.1	
Approach LOS		D			D			D			C	

Timer	1	2	3	4	5	6	7	8
Assigned Phs	1	2	3	4	5	6	7	8
Phs Duration (G+Y+Rc), s	13.3	61.4	14.6	16.7	17.8	56.9	10.1	21.3
Change Period (Y+Rc), s	5.0	5.0	5.0	5.0	5.0	5.0	5.0	5.0
Max Green Setting (Gmax), s	25.0	65.0	20.0	21.0	25.0	65.0	20.0	21.0
Max Q Clear Time (g_c+I1), s	9.4	50.2	9.6	7.8	12.5	43.6	5.8	4.4
Green Ext Time (p_c), s	0.2	6.3	0.2	0.3	0.4	6.1	0.1	0.2

Intersection Summary	
HCM 2010 Ctrl Delay	37.5
HCM 2010 LOS	D

Notes

Movement	EBL	EBT	EBR	WBL	WBT	WBR	NBL	NBT	NBR	SBL	SBT	SBR
Lane Configurations												
Traffic Volume (veh/h)	85	5	600	80	10	10	605	1005	10	5	900	20
Future Volume (veh/h)	85	5	600	80	10	10	605	1005	10	5	900	20
Number	3	8	18	7	4	14	1	6	16	5	2	12
Initial Q (Qb), veh	0	0	0	0	0	0	0	0	0	0	0	0
Ped-Bike Adj(A_pbT)	1.00		1.00	1.00		1.00	1.00		1.00	1.00		1.00
Parking Bus, Adj	1.00	1.00	1.00	1.00	1.00	1.00	1.00	1.00	1.00	1.00	1.00	1.00
Adj Sat Flow, veh/h/ln	1900	1863	1863	1900	1863	1900	1863	1863	1900	1863	1863	1863
Adj Flow Rate, veh/h	92	5	0	87	11	9	658	1092	11	5	978	6
Adj No. of Lanes	0	1	1	0	1	0	1	2	0	1	2	1
Peak Hour Factor	0.92	0.92	0.92	0.92	0.92	0.92	0.92	0.92	0.92	0.92	0.92	0.92
Percent Heavy Veh, %	2	2	2	2	2	2	2	2	2	2	2	2
Cap, veh/h	193	7	135	179	14	12	699	2739	28	7	1321	591
Arrive On Green	0.09	0.09	0.00	0.09	0.09	0.09	0.39	0.76	0.76	0.00	0.37	0.37
Sat Flow, veh/h	1460	79	1583	1345	170	139	1774	3590	36	1774	3539	1583
Grp Volume(v), veh/h	97	0	0	107	0	0	658	538	565	5	978	6
Grp Sat Flow(s),veh/h/ln	1540	0	1583	1655	0	0	1774	1770	1856	1774	1770	1583
Q Serve(g_s), s	0.0	0.0	0.0	0.0	0.0	0.0	36.2	10.5	10.5	0.3	24.3	0.2
Cycle Q Clear(g_c), s	5.8	0.0	0.0	5.9	0.0	0.0	36.2	10.5	10.5	0.3	24.3	0.2
Prop In Lane	0.95		1.00	0.81		0.08	1.00		0.02	1.00		1.00
Lane Grp Cap(c), veh/h	215	0	135	221	0	0	699	1350	1417	7	1321	591
V/C Ratio(X)	0.45	0.00	0.00	0.48	0.00	0.00	0.94	0.40	0.40	0.73	0.74	0.01
Avail Cap(c_a), veh/h	511	0	469	485	0	0	1243	1350	1417	1243	1991	891
HCM Platoon Ratio	1.00	1.00	1.00	1.00	1.00	1.00	1.00	1.00	1.00	1.00	1.00	1.00
Upstream Filter(I)	1.00	0.00	0.00	1.00	0.00	0.00	1.00	1.00	1.00	1.00	1.00	1.00
Uniform Delay (d), s/veh	44.6	0.0	0.0	44.7	0.0	0.0	29.6	4.1	4.1	50.4	27.5	20.0
Incr Delay (d2), s/veh	1.5	0.0	0.0	1.6	0.0	0.0	4.7	0.4	0.4	41.4	1.8	0.0
Initial Q Delay(d3),s/veh	0.0	0.0	0.0	0.0	0.0	0.0	0.0	0.0	0.0	0.0	0.0	0.0
%ile BackOfQ(50%),veh/ln	2.7	0.0	0.0	3.0	0.0	0.0	18.6	5.2	5.5	0.2	12.1	0.1
LnGrp Delay(d),s/veh	46.1	0.0	0.0	46.3	0.0	0.0	34.3	4.5	4.5	91.8	29.3	20.0
LnGrp LOS	D			D			C	A	A	F	C	C
Approach Vol, veh/h		97			107			1761			989	
Approach Delay, s/veh		46.1			46.3			15.6			29.5	
Approach LOS		D			D			B			C	

Timer	1	2	3	4	5	6	7	8
Assigned Phs	1	2		4	5	6		8
Phs Duration (G+Y+Rc), s	43.9	43.8		13.6	4.4	83.3		13.6
Change Period (Y+Rc), s	4.0	6.0		5.0	4.0	6.0		5.0
Max Green Setting (Gmax), s	71.0	57.0		27.0	71.0	57.0		30.0
Max Q Clear Time (g_c+I1), s	39.2	26.3		7.9	2.3	12.5		7.8
Green Ext Time (p_c), s	1.7	11.6		0.3	0.0	14.2		0.3

Intersection Summary	
HCM 2010 Ctrl Delay	22.4
HCM 2010 LOS	C

Notes

Movement	EBL	EBT	EBR	WBL	WBT	WBR	NBL	NBT	NBR	SBL	SBT	SBR
Lane Configurations												
Traffic Volume (veh/h)	55	5	140	15	0	5	135	1555	10	10	1570	60
Future Volume (veh/h)	55	5	140	15	0	5	135	1555	10	10	1570	60
Number	3	8	18	7	4	14	1	6	16	5	2	12
Initial Q (Qb), veh	0	0	0	0	0	0	0	0	0	0	0	0
Ped-Bike Adj(A_pbT)	0.97		0.96	0.97		0.96	1.00		1.00	1.00		1.00
Parking Bus, Adj	1.00	1.00	1.00	1.00	1.00	1.00	1.00	1.00	1.00	1.00	1.00	1.00
Adj Sat Flow, veh/h/ln	1900	1863	1863	1900	1863	1900	1863	1863	1900	1863	1863	1863
Adj Flow Rate, veh/h	60	5	6	16	0	1	147	1690	11	11	1707	39
Adj No. of Lanes	0	1	1	0	1	0	1	2	0	1	2	1
Peak Hour Factor	0.92	0.92	0.92	0.92	0.92	0.92	0.92	0.92	0.92	0.92	0.92	0.92
Percent Heavy Veh, %	2	2	2	2	2	2	2	2	2	2	2	2
Cap, veh/h	229	16	175	179	2	7	179	2644	17	14	2267	1014
Arrive On Green	0.13	0.12	0.12	0.13	0.00	0.12	0.10	0.73	0.73	0.01	0.64	0.64
Sat Flow, veh/h	1376	140	1521	936	18	60	1774	3605	23	1774	3539	1582
Grp Volume(v), veh/h	65	0	6	17	0	0	147	829	872	11	1707	39
Grp Sat Flow(s),veh/h/ln	1516	0	1521	1013	0	0	1774	1770	1858	1774	1770	1582
Q Serve(g_s), s	0.0	0.0	0.3	0.9	0.0	0.0	7.9	22.9	23.0	0.6	32.7	0.9
Cycle Q Clear(g_c), s	3.3	0.0	0.3	4.3	0.0	0.0	7.9	22.9	23.0	0.6	32.7	0.9
Prop In Lane	0.92		1.00	0.94		0.06	1.00		0.01	1.00		1.00
Lane Grp Cap(c), veh/h	261	0	175	199	0	0	179	1298	1363	14	2267	1014
V/C Ratio(X)	0.25	0.00	0.03	0.09	0.00	0.00	0.82	0.64	0.64	0.78	0.75	0.04
Avail Cap(c_a), veh/h	429	0	359	363	0	0	382	1560	1638	200	2757	1232
HCM Platoon Ratio	1.00	1.00	1.00	1.00	1.00	1.00	1.00	1.00	1.00	1.00	1.00	1.00
Upstream Filter(I)	1.00	0.00	1.00	1.00	0.00	0.00	1.00	1.00	1.00	1.00	1.00	1.00
Uniform Delay (d), s/veh	39.2	0.0	38.4	40.7	0.0	0.0	43.0	6.5	6.5	48.3	12.2	6.5
Incr Delay (d2), s/veh	0.2	0.0	0.0	0.1	0.0	0.0	3.6	1.2	1.2	28.5	1.4	0.0
Initial Q Delay(d3),s/veh	0.0	0.0	0.0	0.0	0.0	0.0	0.0	0.0	0.0	0.0	0.0	0.0
%ile BackOfQ(50%),veh/ln	1.6	0.0	0.1	0.4	0.0	0.0	4.1	11.5	12.1	0.4	16.1	0.4
LnGrp Delay(d),s/veh	39.4	0.0	38.4	40.7	0.0	0.0	46.6	7.7	7.7	76.8	13.6	6.5
LnGrp LOS	D		D	D			D	A	A	E	B	A
Approach Vol, veh/h		71			17			1848			1757	
Approach Delay, s/veh		39.3			40.7			10.8			13.8	
Approach LOS		D			D			B			B	

Timer	1	2	3	4	5	6	7	8
Assigned Phs	1	2		4	5	6		8
Phs Duration (G+Y+Rc), s	13.8	67.5		16.2	4.8	76.6		16.2
Change Period (Y+Rc), s	4.0	5.0		5.0	4.0	5.0		5.0
Max Green Setting (Gmax), s	21.0	76.0		23.0	11.0	86.0		23.0
Max Q Clear Time (g_c+I1), s	19.9	34.7		6.3	2.6	25.0		5.3
Green Ext Time (p_c), s	0.1	27.8		0.0	0.0	33.7		0.1

Intersection Summary	
HCM 2010 Ctrl Delay	12.9
HCM 2010 LOS	B

Movement	EBL	EBT	EBR	WBL	WBT	WBR	NBL	NBT	NBR	SBL	SBT	SBR
Lane Configurations												
Traffic Volume (veh/h)	80	5	175	70	5	50	125	1535	60	35	1720	100
Future Volume (veh/h)	80	5	175	70	5	50	125	1535	60	35	1720	100
Number	3	8	18	7	4	14	1	6	16	5	2	12
Initial Q (Qb), veh	0	0	0	0	0	0	0	0	0	0	0	0
Ped-Bike Adj(A_pbT)	0.99		0.99	0.99		0.99	1.00		1.00	1.00		1.00
Parking Bus, Adj	1.00	1.00	1.00	1.00	1.00	1.00	1.00	1.00	1.00	1.00	1.00	1.00
Adj Sat Flow, veh/h/ln	1900	1863	1863	1863	1863	1900	1863	1863	1863	1863	1863	1863
Adj Flow Rate, veh/h	87	5	37	76	5	2	136	1668	49	38	1870	86
Adj No. of Lanes	0	1	1	1	1	0	1	2	1	1	2	1
Peak Hour Factor	0.92	0.92	0.92	0.92	0.92	0.92	0.92	0.92	0.92	0.92	0.92	0.92
Percent Heavy Veh, %	2	2	2	2	2	2	2	2	2	2	2	2
Cap, veh/h	217	11	211	140	170	68	157	2643	1182	49	2427	1086
Arrive On Green	0.14	0.13	0.13	0.13	0.13	0.13	0.09	0.75	0.75	0.03	0.69	0.69
Sat Flow, veh/h	1296	79	1562	1346	1261	504	1774	3539	1582	1774	3539	1583
Grp Volume(v), veh/h	92	0	37	76	0	7	136	1668	49	38	1870	86
Grp Sat Flow(s),veh/h/ln	1376	0	1562	1346	0	1766	1774	1770	1582	1774	1770	1583
Q Serve(g_s), s	9.9	0.0	3.5	9.2	0.0	0.6	12.5	37.3	1.3	3.5	58.1	3.0
Cycle Q Clear(g_c), s	10.5	0.0	3.5	19.6	0.0	0.6	12.5	37.3	1.3	3.5	58.1	3.0
Prop In Lane	0.95		1.00	1.00		0.29	1.00		1.00	1.00		1.00
Lane Grp Cap(c), veh/h	236	0	211	140	0	238	157	2643	1182	49	2427	1086
V/C Ratio(X)	0.39	0.00	0.18	0.54	0.00	0.03	0.86	0.63	0.04	0.78	0.77	0.08
Avail Cap(c_a), veh/h	251	0	227	154	0	257	280	2643	1182	108	2427	1086
HCM Platoon Ratio	1.00	1.00	1.00	1.00	1.00	1.00	1.00	1.00	1.00	1.00	1.00	1.00
Upstream Filter(I)	1.00	0.00	1.00	1.00	0.00	1.00	0.66	0.66	0.66	1.00	1.00	1.00
Uniform Delay (d), s/veh	66.1	0.0	63.3	75.4	0.0	62.0	74.2	10.0	5.5	79.7	17.3	8.6
Incr Delay (d2), s/veh	1.0	0.0	0.4	3.3	0.0	0.0	3.6	0.8	0.0	9.3	2.4	0.1
Initial Q Delay(d3),s/veh	0.0	0.0	0.0	0.0	0.0	0.0	0.0	0.0	0.0	0.0	0.0	0.0
%ile BackOfQ(50%),veh/ln	3.9	0.0	1.5	3.5	0.0	0.3	6.3	18.3	0.6	1.8	28.9	1.3
LnGrp Delay(d),s/veh	67.1	0.0	63.7	78.7	0.0	62.1	77.8	10.8	5.5	89.0	19.7	8.8
LnGrp LOS	E		E	E		E	E	B	A	F	B	A
Approach Vol, veh/h		129			83			1853			1994	
Approach Delay, s/veh		66.1			77.3			15.6			20.6	
Approach LOS		E			E			B			C	

Timer	1	2	3	4	5	6	7	8
Assigned Phs	1	2		4	5	6		8
Phs Duration (G+Y+Rc), s	18.6	119.1		27.2	8.6	129.2		27.2
Change Period (Y+Rc), s	4.0	6.0		5.0	4.0	6.0		5.0
Max Green Setting (Gmax), s	26.0	100.0		24.0	10.0	116.0		24.0
Max Q Clear Time (g_c+I1), s	14.5	60.1		21.6	5.5	39.3		12.5
Green Ext Time (p_c), s	0.2	30.4		0.0	0.0	38.6		0.3

Intersection Summary	
HCM 2010 Ctrl Delay	20.9
HCM 2010 LOS	C

Movement	EBL	EBT	EBR	WBL	WBT	WBR	NBL	NBT	NBR	SBL	SBT	SBR
Lane Configurations												
Traffic Volume (veh/h)	310	5	615	15	0	5	385	1565	10	80	1750	140
Future Volume (veh/h)	310	5	615	15	0	5	385	1565	10	80	1750	140
Number	3	8	18	7	4	14	1	6	16	5	2	12
Initial Q (Qb), veh	0	0	0	0	0	0	0	0	0	0	0	0
Ped-Bike Adj(A_pbT)	1.00		0.99	1.00		0.96	1.00		1.00	1.00		1.00
Parking Bus, Adj	1.00	1.00	1.00	1.00	1.00	1.00	1.00	1.00	1.00	1.00	1.00	1.00
Adj Sat Flow, veh/h/ln	1863	1863	1863	1900	1863	1900	1863	1863	1900	1863	1863	1863
Adj Flow Rate, veh/h	341	0	464	16	0	1	418	1701	11	87	1902	131
Adj No. of Lanes	2	0	2	0	1	0	2	2	0	1	2	1
Peak Hour Factor	0.92	0.92	0.92	0.92	0.92	0.92	0.92	0.92	0.92	0.92	0.92	0.92
Percent Heavy Veh, %	2	2	2	2	2	2	2	2	2	2	2	2
Cap, veh/h	526	0	897	68	0	4	487	2430	16	117	2119	1175
Arrive On Green	0.15	0.00	0.14	0.04	0.00	0.03	0.14	0.67	0.67	0.07	0.60	0.60
Sat Flow, veh/h	3548	0	3123	1653	0	103	3442	3605	23	1774	3539	1583
Grp Volume(v), veh/h	341	0	464	17	0	0	418	834	878	87	1902	131
Grp Sat Flow(s),veh/h/ln	1774	0	1561	1756	0	0	1721	1770	1859	1774	1770	1583
Q Serve(g_s), s	20.5	0.0	28.2	2.1	0.0	0.0	26.8	65.7	65.9	10.9	105.4	5.3
Cycle Q Clear(g_c), s	20.5	0.0	28.2	2.1	0.0	0.0	26.8	65.7	65.9	10.9	105.4	5.3
Prop In Lane	1.00		1.00	0.94		0.06	1.00		0.01	1.00		1.00
Lane Grp Cap(c), veh/h	526	0	897	72	0	0	487	1193	1253	117	2119	1175
V/C Ratio(X)	0.65	0.00	0.52	0.24	0.00	0.00	0.86	0.70	0.70	0.74	0.90	0.11
Avail Cap(c_a), veh/h	534	0	904	241	0	0	883	1519	1596	118	2365	1286
HCM Platoon Ratio	1.00	1.00	1.00	1.00	1.00	1.00	1.00	1.00	1.00	1.00	1.00	1.00
Upstream Filter(I)	1.00	0.00	1.00	1.00	0.00	0.00	1.00	1.00	1.00	1.00	1.00	1.00
Uniform Delay (d), s/veh	90.7	0.0	67.8	105.0	0.0	0.0	94.8	22.7	22.7	103.7	39.3	8.2
Incr Delay (d2), s/veh	2.1	0.0	0.2	0.6	0.0	0.0	1.8	1.3	1.3	19.9	4.9	0.1
Initial Q Delay(d3),s/veh	0.0	0.0	0.0	0.0	0.0	0.0	0.0	0.0	0.0	0.0	0.0	0.0
%ile BackOfQ(50%),veh/ln	10.2	0.0	12.2	1.0	0.0	0.0	12.9	32.4	34.1	6.0	52.7	3.6
LnGrp Delay(d),s/veh	92.8	0.0	68.0	105.7	0.0	0.0	96.6	24.0	24.0	123.6	44.3	8.2
LnGrp LOS	F		E	F			F	C	C	F	D	A
Approach Vol, veh/h		805			17			2130			2120	
Approach Delay, s/veh		78.5			105.7			38.2			45.3	
Approach LOS		E			F			D			D	

Timer	1	2	3	4	5	6	7	8
Assigned Phs	1	2		4	5	6		8
Phs Duration (G+Y+Rc), s	36.0	139.3		13.3	18.9	156.4		37.5
Change Period (Y+Rc), s	6.0	6.0		7.0	6.0	6.0		7.0
Max Green Setting (Gmax), s	56.0	149.0		28.0	13.0	192.0		31.0
Max Q Clear Time (g_c+I1), s	29.8	107.4		4.1	12.9	67.9		30.2
Green Ext Time (p_c), s	1.1	25.9		0.0	0.0	25.3		0.3

Intersection Summary	
HCM 2010 Ctrl Delay	47.8
HCM 2010 LOS	D

Notes

Movement	EBL	EBT	EBR	WBL	WBT	WBR	NBL	NBT	NBR	SBL	SBT	SBR
Lane Configurations												
Traffic Volume (veh/h)	10	0	5	90	5	60	10	1895	90	90	2310	5
Future Volume (veh/h)	10	0	5	90	5	60	10	1895	90	90	2310	5
Number	3	8	18	7	4	14	1	6	16	5	2	12
Initial Q (Qb), veh	0	0	0	0	0	0	0	0	0	0	0	0
Ped-Bike Adj(A_pbT)	1.00		1.00	1.00		1.00	1.00		1.00	1.00		1.00
Parking Bus, Adj	1.00	1.00	1.00	1.00	1.00	1.00	1.00	1.00	1.00	1.00	1.00	1.00
Adj Sat Flow, veh/h/ln	1900	1863	1900	1863	1863	1900	1863	1863	1900	1863	1863	1900
Adj Flow Rate, veh/h	11	0	1	98	5	2	11	2060	96	98	2511	5
Adj No. of Lanes	0	1	0	1	1	0	1	2	0	1	2	0
Peak Hour Factor	0.92	0.92	0.92	0.92	0.92	0.92	0.92	0.92	0.92	0.92	0.92	0.92
Percent Heavy Veh, %	2	2	2	2	2	2	2	2	2	2	2	2
Cap, veh/h	156	2	10	176	110	44	22	2624	121	122	2964	6
Arrive On Green	0.09	0.00	0.08	0.09	0.09	0.08	0.02	1.00	1.00	0.07	0.82	0.81
Sat Flow, veh/h	1244	24	115	1410	1267	507	1774	3445	159	1774	3624	7
Grp Volume(v), veh/h	12	0	0	98	0	7	11	1050	1106	98	1226	1290
Grp Sat Flow(s),veh/h/ln	1384	0	0	1410	0	1773	1774	1770	1835	1774	1770	1861
Q Serve(g_s), s	0.9	0.0	0.0	8.1	0.0	0.5	0.9	0.0	0.0	7.9	59.5	59.6
Cycle Q Clear(g_c), s	1.4	0.0	0.0	9.5	0.0	0.5	0.9	0.0	0.0	7.9	59.5	59.6
Prop In Lane	0.92		0.08	1.00		0.29	1.00		0.09	1.00		0.00
Lane Grp Cap(c), veh/h	168	0	0	176	0	154	22	1348	1397	122	1447	1522
V/C Ratio(X)	0.07	0.00	0.00	0.56	0.00	0.05	0.50	0.78	0.79	0.80	0.85	0.85
Avail Cap(c_a), veh/h	279	0	0	287	0	294	61	1348	1397	184	1447	1522
HCM Platoon Ratio	1.00	1.00	1.00	1.00	1.00	1.00	2.00	2.00	2.00	1.00	1.00	1.00
Upstream Filter(I)	1.00	0.00	0.00	1.00	0.00	1.00	0.56	0.56	0.56	1.00	1.00	1.00
Uniform Delay (d), s/veh	61.2	0.0	0.0	64.6	0.0	60.8	70.3	0.0	0.0	66.6	7.8	7.8
Incr Delay (d2), s/veh	0.2	0.0	0.0	2.7	0.0	0.1	3.7	2.6	2.7	8.0	6.3	6.0
Initial Q Delay(d3),s/veh	0.0	0.0	0.0	0.0	0.0	0.0	0.0	0.0	0.0	0.0	0.0	0.0
%ile BackOfQ(50%),veh/ln	0.5	0.0	0.0	4.0	0.0	0.3	0.5	1.0	1.0	4.1	30.8	32.7
LnGrp Delay(d),s/veh	61.4	0.0	0.0	67.4	0.0	60.9	73.9	2.6	2.7	74.5	14.1	13.9
LnGrp LOS	E			E		E	E	A	A	E	B	B
Approach Vol, veh/h		12			105			2167			2614	
Approach Delay, s/veh		61.4			66.9			3.0			16.3	
Approach LOS		E			E			A			B	

Timer	1	2	3	4	5	6	7	8
Assigned Phs	1	2		4	5	6		8
Phs Duration (G+Y+Rc), s	5.8	122.6		16.6	14.0	114.4		16.6
Change Period (Y+Rc), s	4.0	5.0		5.0	4.0	5.0		5.0
Max Green Setting (Gmax), s	5.0	103.0		23.0	15.0	93.0		23.0
Max Q Clear Time (g_c+I1), s	2.9	61.6		11.5	9.9	2.0		3.4
Green Ext Time (p_c), s	0.0	39.2		0.2	0.1	66.4		0.0

Intersection Summary	
HCM 2010 Ctrl Delay	11.6
HCM 2010 LOS	B

Movement	EBL	EBT	EBR	WBL	WBT	WBR	NBL	NBT	NBR	SBL	SBT	SBR
Lane Configurations												
Traffic Volume (veh/h)	185	15	10	60	5	10	5	1810	20	5	1960	335
Future Volume (veh/h)	185	15	10	60	5	10	5	1810	20	5	1960	335
Number	3	8	18	7	4	14	1	6	16	5	2	12
Initial Q (Qb), veh	0	0	0	0	0	0	0	0	0	0	0	0
Ped-Bike Adj(A_pbT)	1.00		1.00	1.00		1.00	1.00		1.00	1.00		1.00
Parking Bus, Adj	1.00	1.00	1.00	1.00	1.00	1.00	1.00	1.00	1.00	1.00	1.00	1.00
Adj Sat Flow, veh/h/ln	1900	1863	1900	1900	1863	1900	1863	1863	1900	1863	1863	1863
Adj Flow Rate, veh/h	201	16	9	65	5	7	5	1967	21	5	2130	285
Adj No. of Lanes	0	1	0	0	1	0	1	2	0	1	2	1
Peak Hour Factor	0.92	0.92	0.92	0.92	0.92	0.92	0.92	0.92	0.92	0.92	0.92	0.92
Percent Heavy Veh, %	2	2	2	2	2	2	2	2	2	2	2	2
Cap, veh/h	273	18	10	281	22	26	7	2662	28	7	2627	1175
Arrive On Green	0.17	0.17	0.16	0.17	0.17	0.16	0.01	0.99	0.98	0.00	0.74	0.74
Sat Flow, veh/h	1322	105	59	1371	130	150	1774	3587	38	1774	3539	1583
Grp Volume(v), veh/h	226	0	0	77	0	0	5	969	1019	5	2130	285
Grp Sat Flow(s),veh/h/ln	1486	0	0	1651	0	0	1774	1770	1856	1774	1770	1583
Q Serve(g_s), s	15.7	0.0	0.0	0.0	0.0	0.0	0.4	3.8	3.9	0.4	56.5	8.2
Cycle Q Clear(g_c), s	21.4	0.0	0.0	5.7	0.0	0.0	0.4	3.8	3.9	0.4	56.5	8.2
Prop In Lane	0.89		0.04	0.84		0.09	1.00		0.02	1.00		1.00
Lane Grp Cap(c), veh/h	302	0	0	329	0	0	7	1313	1377	7	2627	1175
V/C Ratio(X)	0.75	0.00	0.00	0.23	0.00	0.00	0.75	0.74	0.74	0.75	0.81	0.24
Avail Cap(c_a), veh/h	362	0	0	389	0	0	37	1313	1377	37	2627	1175
HCM Platoon Ratio	1.00	1.00	1.00	1.00	1.00	1.00	1.33	1.33	1.33	1.00	1.00	1.00
Upstream Filter(I)	1.00	0.00	0.00	1.00	0.00	0.00	0.56	0.56	0.56	0.37	0.37	0.37
Uniform Delay (d), s/veh	58.3	0.0	0.0	52.2	0.0	0.0	72.1	0.3	0.3	72.2	12.1	5.9
Incr Delay (d2), s/veh	6.9	0.0	0.0	0.4	0.0	0.0	28.5	2.1	2.0	20.0	1.1	0.2
Initial Q Delay(d3),s/veh	0.0	0.0	0.0	0.0	0.0	0.0	0.0	0.0	0.0	0.0	0.0	0.0
%ile BackOfQ(50%),veh/ln	9.4	0.0	0.0	2.7	0.0	0.0	0.3	1.5	1.6	0.2	27.6	3.6
LnGrp Delay(d),s/veh	65.2	0.0	0.0	52.5	0.0	0.0	100.6	2.4	2.3	92.2	13.2	6.1
LnGrp LOS	E			D			F	A	A	F	B	A
Approach Vol, veh/h		226			77			1993			2420	
Approach Delay, s/veh		65.2			52.5			2.6			12.5	
Approach LOS		E			D			A			B	

Timer	1	2	3	4	5	6	7	8
Assigned Phs	1	2		4	5	6		8
Phs Duration (G+Y+Rc), s	4.5	111.6		28.8	4.5	111.6		28.8
Change Period (Y+Rc), s	4.0	5.0		5.0	4.0	5.0		5.0
Max Green Setting (Gmax), s	3.0	98.0		30.0	3.0	98.0		30.0
Max Q Clear Time (g_c+I1), s	2.4	58.5		7.7	2.4	5.9		23.4
Green Ext Time (p_c), s	0.0	37.4		0.2	0.0	72.7		0.5

Intersection Summary	
HCM 2010 Ctrl Delay	11.5
HCM 2010 LOS	B

Movement	EBL	EBT	EBR	WBL	WBT	WBR	NBL	NBT	NBR	SBL	SBT	SBR
Lane Configurations												
Traffic Volume (veh/h)	185	35	45	95	25	20	55	1605	105	30	1890	155
Future Volume (veh/h)	185	35	45	95	25	20	55	1605	105	30	1890	155
Number	3	8	18	7	4	14	1	6	16	5	2	12
Initial Q (Qb), veh	0	0	0	0	0	0	0	0	0	0	0	0
Ped-Bike Adj(A_pbT)	0.98		0.98	0.99		0.98	1.00		1.00	1.00		1.00
Parking Bus, Adj	1.00	1.00	1.00	1.00	1.00	1.00	1.00	1.00	1.00	1.00	1.00	1.00
Adj Sat Flow, veh/h/ln	1900	1863	1863	1863	1863	1900	1863	1863	1900	1863	1863	1900
Adj Flow Rate, veh/h	201	38	10	103	27	2	60	1745	111	33	2054	164
Adj No. of Lanes	0	1	1	1	1	0	1	2	0	1	2	0
Peak Hour Factor	0.92	0.92	0.92	0.92	0.92	0.92	0.92	0.92	0.92	0.92	0.92	0.92
Percent Heavy Veh, %	2	2	2	2	2	2	2	2	2	2	2	2
Cap, veh/h	267	42	309	355	342	25	73	2345	148	42	2247	177
Arrive On Green	0.20	0.20	0.20	0.20	0.20	0.19	0.08	1.00	1.00	0.05	1.00	1.00
Sat Flow, veh/h	1107	209	1545	1347	1710	127	1774	3381	213	1774	3323	262
Grp Volume(v), veh/h	239	0	10	103	0	29	60	906	950	33	1081	1137
Grp Sat Flow(s),veh/h/ln	1317	0	1545	1347	0	1837	1774	1770	1825	1774	1770	1816
Q Serve(g_s), s	24.1	0.0	0.8	0.0	0.0	1.9	4.8	0.0	0.0	2.7	0.0	0.0
Cycle Q Clear(g_c), s	26.0	0.0	0.8	8.3	0.0	1.9	4.8	0.0	0.0	2.7	0.0	0.0
Prop In Lane	0.84		1.00	1.00		0.07	1.00		0.12	1.00		0.14
Lane Grp Cap(c), veh/h	309	0	309	355	0	367	73	1228	1266	42	1196	1227
V/C Ratio(X)	0.77	0.00	0.03	0.29	0.00	0.08	0.82	0.74	0.75	0.79	0.90	0.93
Avail Cap(c_a), veh/h	309	0	309	355	0	367	73	1228	1266	73	1196	1227
HCM Platoon Ratio	1.00	1.00	1.00	1.00	1.00	1.00	2.00	2.00	2.00	2.00	2.00	2.00
Upstream Filter(I)	1.00	0.00	1.00	1.00	0.00	1.00	0.30	0.30	0.30	0.47	0.47	0.47
Uniform Delay (d), s/veh	57.7	0.0	46.7	49.7	0.0	47.2	66.0	0.0	0.0	68.7	0.0	0.0
Incr Delay (d2), s/veh	11.5	0.0	0.0	0.4	0.0	0.1	18.0	1.2	1.3	5.6	5.9	7.2
Initial Q Delay(d3),s/veh	0.0	0.0	0.0	0.0	0.0	0.0	0.0	0.0	0.0	0.0	0.0	0.0
%ile BackOfQ(50%),veh/ln	10.4	0.0	0.3	3.6	0.0	1.0	2.7	0.4	0.4	1.4	2.0	2.5
LnGrp Delay(d),s/veh	69.3	0.0	46.8	50.2	0.0	47.3	83.9	1.2	1.3	74.3	5.9	7.2
LnGrp LOS	E		D	D		D	F	A	A	E	A	A
Approach Vol, veh/h		249			132			1916			2251	
Approach Delay, s/veh		68.4			49.5			3.8			7.6	
Approach LOS		E			D			A			A	

Timer	1	2	3	4	5	6	7	8
Assigned Phs	1	2		4	5	6		8
Phs Duration (G+Y+Rc), s	10.0	102.0		33.0	7.4	104.6		33.0
Change Period (Y+Rc), s	4.0	5.0		5.0	4.0	5.0		5.0
Max Green Setting (Gmax), s	6.0	97.0		28.0	6.0	97.0		28.0
Max Q Clear Time (g_c+I1), s	10.8	2.0		10.3	4.7	2.0		28.0
Green Ext Time (p_c), s	0.0	69.9		0.4	0.0	48.1		0.0

Intersection Summary	
HCM 2010 Ctrl Delay	10.5
HCM 2010 LOS	B

Notes

Movement	EBL	EBT	EBR	WBL	WBT	WBR	NBL	NBT	NBR	SBL	SBT	SBR
Lane Configurations												
Traffic Volume (veh/h)	65	185	60	125	110	725	55	980	195	645	1255	65
Future Volume (veh/h)	65	185	60	125	110	725	55	980	195	645	1255	65
Number	7	4	14	3	8	18	1	6	16	5	2	12
Initial Q (Qb), veh	0	0	0	0	0	0	0	0	0	0	0	0
Ped-Bike Adj(A_pbT)	0.99		0.98	1.00		0.98	1.00		0.99	1.00		0.99
Parking Bus, Adj	1.00	1.00	1.00	1.00	1.00	1.00	1.00	1.00	1.00	1.00	1.00	1.00
Adj Sat Flow, veh/h/ln	1900	1863	1863	1863	1863	1863	1863	1863	1863	1863	1863	1900
Adj Flow Rate, veh/h	71	201	12	136	120	475	60	1065	133	701	1364	69
Adj No. of Lanes	0	1	1	1	1	1	1	2	1	2	2	0
Peak Hour Factor	0.92	0.92	0.92	0.92	0.92	0.92	0.92	0.92	0.92	0.92	0.92	0.92
Percent Heavy Veh, %	2	2	2	2	2	2	2	2	2	2	2	2
Cap, veh/h	110	262	367	231	609	509	77	1326	588	741	1875	95
Arrive On Green	0.24	0.24	0.24	0.06	0.33	0.33	0.04	0.37	0.37	0.43	1.00	1.00
Sat Flow, veh/h	330	1104	1547	1774	1863	1557	1774	3539	1571	3442	3428	173
Grp Volume(v), veh/h	272	0	12	136	120	475	60	1065	133	701	703	730
Grp Sat Flow(s),veh/h/ln	1435	0	1547	1774	1863	1557	1774	1770	1571	1721	1770	1831
Q Serve(g_s), s	22.4	0.0	0.9	8.3	6.7	42.8	4.9	39.0	8.4	28.4	0.0	0.0
Cycle Q Clear(g_c), s	25.5	0.0	0.9	8.3	6.7	42.8	4.9	39.0	8.4	28.4	0.0	0.0
Prop In Lane	0.26		1.00	1.00		1.00	1.00		1.00	1.00		0.09
Lane Grp Cap(c), veh/h	372	0	367	231	609	509	77	1326	588	741	968	1001
V/C Ratio(X)	0.73	0.00	0.03	0.59	0.20	0.93	0.78	0.80	0.23	0.95	0.73	0.73
Avail Cap(c_a), veh/h	416	0	416	231	668	558	110	1326	588	807	968	1001
HCM Platoon Ratio	1.00	1.00	1.00	1.00	1.00	1.00	1.00	1.00	1.00	2.00	2.00	2.00
Upstream Filter(I)	1.00	0.00	1.00	1.00	1.00	1.00	0.88	0.88	0.88	0.28	0.28	0.28
Uniform Delay (d), s/veh	51.5	0.0	42.5	40.0	35.1	47.2	68.7	40.6	31.0	40.4	0.0	0.0
Incr Delay (d2), s/veh	5.7	0.0	0.0	3.9	0.2	21.8	11.0	4.6	0.8	7.0	1.4	1.3
Initial Q Delay(d3),s/veh	0.0	0.0	0.0	0.0	0.0	0.0	0.0	0.0	0.0	0.0	0.0	0.0
%ile BackOfQ(50%),veh/ln	10.8	0.0	0.4	4.3	3.5	21.5	2.6	19.9	3.7	14.1	0.4	0.4
LnGrp Delay(d),s/veh	57.2	0.0	42.5	43.8	35.2	69.0	79.7	45.2	31.8	47.4	1.4	1.3
LnGrp LOS	E		D	D	D	E	E	D	C	D	A	A
Approach Vol, veh/h		284			731			1258			2134	
Approach Delay, s/veh		56.6			58.8			45.4			16.5	
Approach LOS		E			E			D			B	

Timer	1	2	3	4	5	6	7	8
Assigned Phs	1	2	3	4	5	6		8
Phs Duration (G+Y+Rc), s	10.3	83.3	13.0	38.4	35.2	58.3		51.4
Change Period (Y+Rc), s	4.0	5.0	5.0	5.0	4.0	5.0		5.0
Max Green Setting (Gmax), s	9.0	71.0	8.0	38.0	34.0	46.0		51.0
Max Q Clear Time (g_c+I1), s	6.9	2.0	10.3	27.5	30.4	41.0		44.8
Green Ext Time (p_c), s	0.0	25.6	0.0	1.0	0.9	3.7		1.6

Intersection Summary	
HCM 2010 Ctrl Delay	34.3
HCM 2010 LOS	C

Notes

Intersection	
Int Delay, s/veh	0.5

Movement	WBL	WBR	NBT	NBR	SBL	SBT
Lane Configurations		↱	↑	↱		↑
Traffic Vol, veh/h	0	50	900	65	0	845
Future Vol, veh/h	0	50	900	65	0	845
Conflicting Peds, #/hr	0	0	0	0	0	0
Sign Control	Stop	Stop	Free	Free	Free	Free
RT Channelized	-	None	-	None	-	None
Storage Length	-	0	-	0	-	-
Veh in Median Storage, #	0	-	0	-	-	0
Grade, %	0	-	0	-	-	0
Peak Hour Factor	92	92	92	92	92	92
Heavy Vehicles, %	2	2	2	2	2	2
Mvmt Flow	0	54	978	71	0	918

Major/Minor	Minor1		Major1		Major2	
Conflicting Flow All	-	978	0	0	-	-
Stage 1	-	-	-	-	-	-
Stage 2	-	-	-	-	-	-
Critical Hdwy	-	6.22	-	-	-	-
Critical Hdwy Stg 1	-	-	-	-	-	-
Critical Hdwy Stg 2	-	-	-	-	-	-
Follow-up Hdwy	-	3.318	-	-	-	-
Pot Cap-1 Maneuver	0	304	-	-	0	-
Stage 1	0	-	-	-	0	-
Stage 2	0	-	-	-	0	-
Platoon blocked, %			-	-		-
Mov Cap-1 Maneuver	-	304	-	-	-	-
Mov Cap-2 Maneuver	-	-	-	-	-	-
Stage 1	-	-	-	-	-	-
Stage 2	-	-	-	-	-	-

Approach	WB	NB	SB
HCM Control Delay, s	19.4	0	0
HCM LOS	C		

Minor Lane/Major Mvmt	NBT	NBR	WBLn1	SBT
Capacity (veh/h)	-	-	304	-
HCM Lane V/C Ratio	-	-	0.179	-
HCM Control Delay (s)	-	-	19.4	-
HCM Lane LOS	-	-	C	-
HCM 95th %tile Q(veh)	-	-	0.6	-

Intersection	
Int Delay, s/veh	6.9

Movement	EBL	EBT	EBR	WBL	WBT	WBR	NBL	NBT	NBR	SBL	SBT	SBR
Lane Configurations												
Traffic Vol, veh/h	115	70	75	5	60	10	65	10	15	30	10	100
Future Vol, veh/h	115	70	75	5	60	10	65	10	15	30	10	100
Conflicting Peds, #/hr	0	0	0	0	0	0	0	0	0	0	0	0
Sign Control	Free	Free	Free	Free	Free	Free	Stop	Stop	Stop	Stop	Stop	Stop
RT Channelized	-	-	None	-	-	None	-	-	None	-	-	None
Storage Length	100	-	-	100	-	-	-	-	-	-	-	-
Veh in Median Storage, #	-	0	-	-	0	-	-	0	-	-	0	-
Grade, %	-	0	-	-	0	-	-	0	-	-	0	-
Peak Hour Factor	92	92	92	92	92	92	92	92	92	92	92	92
Heavy Vehicles, %	2	2	2	2	2	2	2	2	2	2	2	2
Mvmt Flow	125	76	82	5	65	11	71	11	16	33	11	109

Major/Minor	Major1			Major2			Minor1			Minor2		
Conflicting Flow All	76	0	0	158	0	0	508	453	117	462	489	71
Stage 1	-	-	-	-	-	-	367	367	-	81	81	-
Stage 2	-	-	-	-	-	-	141	86	-	381	408	-
Critical Hdwy	4.12	-	-	4.12	-	-	7.12	6.52	6.22	7.12	6.52	6.22
Critical Hdwy Stg 1	-	-	-	-	-	-	6.12	5.52	-	6.12	5.52	-
Critical Hdwy Stg 2	-	-	-	-	-	-	6.12	5.52	-	6.12	5.52	-
Follow-up Hdwy	2.218	-	-	2.218	-	-	3.518	4.018	3.318	3.518	4.018	3.318
Pot Cap-1 Maneuver	1523	-	-	1422	-	-	475	503	935	510	480	991
Stage 1	-	-	-	-	-	-	653	622	-	927	828	-
Stage 2	-	-	-	-	-	-	862	824	-	641	597	-
Platoon blocked, %		-	-		-	-						
Mov Cap-1 Maneuver	1523	-	-	1422	-	-	388	460	935	460	439	991
Mov Cap-2 Maneuver	-	-	-	-	-	-	388	460	-	460	439	-
Stage 1	-	-	-	-	-	-	599	571	-	851	825	-
Stage 2	-	-	-	-	-	-	755	821	-	567	548	-

Approach	EB	WB	NB	SB
HCM Control Delay, s	3.4	0.5	15.6	11.1
HCM LOS			C	B

Minor Lane/Major Mvmt	NBLn1	EBL	EBT	EBR	WBL	WBT	WBR	SBLn1
Capacity (veh/h)	438	1523	-	-	1422	-	-	741
HCM Lane V/C Ratio	0.223	0.082	-	-	0.004	-	-	0.205
HCM Control Delay (s)	15.6	7.6	-	-	7.5	-	-	11.1
HCM Lane LOS	C	A	-	-	A	-	-	B
HCM 95th %tile Q(veh)	0.8	0.3	-	-	0	-	-	0.8

Intersection	
Int Delay, s/veh	4.3

Movement	EBL	EBT	EBR	WBL	WBT	WBR	NBL	NBT	NBR	SBL	SBT	SBR
Lane Configurations												
Traffic Vol, veh/h	25	15	75	5	20	5	40	5	5	5	5	15
Future Vol, veh/h	25	15	75	5	20	5	40	5	5	5	5	15
Conflicting Peds, #/hr	0	0	0	0	0	0	0	0	0	0	0	0
Sign Control	Free	Free	Free	Free	Free	Free	Stop	Stop	Stop	Stop	Stop	Stop
RT Channelized	-	-	None	-	-	None	-	-	None	-	-	None
Storage Length	-	-	-	-	-	-	-	-	-	-	-	-
Veh in Median Storage, #	-	0	-	-	0	-	-	0	-	-	0	-
Grade, %	-	0	-	-	0	-	-	0	-	-	0	-
Peak Hour Factor	92	92	92	92	92	92	92	92	92	92	92	92
Heavy Vehicles, %	2	2	2	2	2	2	2	2	2	2	2	2
Mvmt Flow	27	16	82	5	22	5	43	5	5	5	5	16

Major/Minor	Major1			Major2			Minor1			Minor2		
Conflicting Flow All	27	0	0	98	0	0	156	148	57	151	187	25
Stage 1	-	-	-	-	-	-	111	111	-	35	35	-
Stage 2	-	-	-	-	-	-	45	37	-	116	152	-
Critical Hdwy	4.12	-	-	4.12	-	-	7.12	6.52	6.22	7.12	6.52	6.22
Critical Hdwy Stg 1	-	-	-	-	-	-	6.12	5.52	-	6.12	5.52	-
Critical Hdwy Stg 2	-	-	-	-	-	-	6.12	5.52	-	6.12	5.52	-
Follow-up Hdwy	2.218	-	-	2.218	-	-	3.518	4.018	3.318	3.518	4.018	3.318
Pot Cap-1 Maneuver	1587	-	-	1495	-	-	810	743	1009	816	708	1051
Stage 1	-	-	-	-	-	-	894	804	-	981	866	-
Stage 2	-	-	-	-	-	-	969	864	-	889	772	-
Platoon blocked, %		-	-		-	-						
Mov Cap-1 Maneuver	1587	-	-	1495	-	-	780	727	1009	794	693	1051
Mov Cap-2 Maneuver	-	-	-	-	-	-	780	727	-	794	693	-
Stage 1	-	-	-	-	-	-	878	790	-	963	863	-
Stage 2	-	-	-	-	-	-	945	861	-	862	758	-

Approach	EB	WB	NB	SB
HCM Control Delay, s	1.6	1.2	9.9	9.1
HCM LOS			A	A

Minor Lane/Major Mvmt	NBLn1	EBL	EBT	EBR	WBL	WBT	WBR	SBLn1
Capacity (veh/h)	792	1587	-	-	1495	-	-	900
HCM Lane V/C Ratio	0.069	0.017	-	-	0.004	-	-	0.03
HCM Control Delay (s)	9.9	7.3	0	-	7.4	0	-	9.1
HCM Lane LOS	A	A	A	-	A	A	-	A
HCM 95th %tile Q(veh)	0.2	0.1	-	-	0	-	-	0.1

APPENDIX C

LEVEL OF SERVICE CALCULATIONS

- Future Year 2022 Scenario 2 WE Peak

HCM 2010 Signalized Intersection Summary
1: Napilihau Street

10/05/2017

Movement	EBL	EBT	EBR	WBL	WBT	WBR	NBL	NBT	NBR	SBL	SBT	SBR
Lane Configurations												
Traffic Volume (veh/h)	40	45	370	45	50	20	315	355	40	20	315	90
Future Volume (veh/h)	40	45	370	45	50	20	315	355	40	20	315	90
Number	7	4	14	3	8	18	5	2	12	1	6	16
Initial Q (Qb), veh	0	0	0	0	0	0	0	0	0	0	0	0
Ped-Bike Adj(A_pbT)	0.99		0.99	0.99		0.99	1.00		1.00	1.00		1.00
Parking Bus, Adj	1.00	1.00	1.00	1.00	1.00	1.00	1.00	1.00	1.00	1.00	1.00	1.00
Adj Sat Flow, veh/h/ln	1900	1863	1863	1863	1863	1900	1863	1863	1863	1863	1863	1863
Adj Flow Rate, veh/h	43	49	34	49	54	10	342	386	25	22	342	28
Adj No. of Lanes	0	1	1	1	1	0	1	1	1	1	1	1
Peak Hour Factor	0.92	0.92	0.92	0.92	0.92	0.92	0.92	0.92	0.92	0.92	0.92	0.92
Percent Heavy Veh, %	2	2	2	2	2	2	2	2	2	2	2	2
Cap, veh/h	175	119	188	232	184	34	427	985	836	28	567	481
Arrive On Green	0.12	0.12	0.12	0.12	0.12	0.12	0.24	0.53	0.53	0.02	0.30	0.30
Sat Flow, veh/h	534	993	1564	1299	1526	283	1774	1863	1580	1774	1863	1581
Grp Volume(v), veh/h	92	0	34	49	0	64	342	386	25	22	342	28
Grp Sat Flow(s),veh/h/ln	1527	0	1564	1299	0	1809	1774	1863	1580	1774	1863	1581
Q Serve(g_s), s	1.2	0.0	0.9	1.8	0.0	1.5	8.7	5.9	0.4	0.6	7.5	0.6
Cycle Q Clear(g_c), s	2.8	0.0	0.9	4.5	0.0	1.5	8.7	5.9	0.4	0.6	7.5	0.6
Prop In Lane	0.47		1.00	1.00		0.16	1.00		1.00	1.00		1.00
Lane Grp Cap(c), veh/h	294	0	188	232	0	218	427	985	836	28	567	481
V/C Ratio(X)	0.31	0.00	0.18	0.21	0.00	0.29	0.80	0.39	0.03	0.78	0.60	0.06
Avail Cap(c_a), veh/h	891	0	786	728	0	908	1114	3079	2612	557	2494	2117
HCM Platoon Ratio	1.00	1.00	1.00	1.00	1.00	1.00	1.00	1.00	1.00	1.00	1.00	1.00
Upstream Filter(I)	1.00	0.00	1.00	1.00	0.00	1.00	1.00	1.00	1.00	1.00	1.00	1.00
Uniform Delay (d), s/veh	19.6	0.0	18.9	21.8	0.0	19.2	17.1	6.7	5.4	23.4	14.2	11.8
Incr Delay (d2), s/veh	0.6	0.0	0.5	0.4	0.0	0.7	3.5	0.5	0.0	35.9	2.2	0.1
Initial Q Delay(d3),s/veh	0.0	0.0	0.0	0.0	0.0	0.0	0.0	0.0	0.0	0.0	0.0	0.0
%ile BackOfQ(50%),veh/ln	1.2	0.0	0.4	0.7	0.0	0.8	4.6	3.2	0.2	0.6	4.1	0.3
LnGrp Delay(d),s/veh	20.2	0.0	19.4	22.3	0.0	19.9	20.6	7.2	5.4	59.3	16.4	11.9
LnGrp LOS	C		B	C		B	C	A	A	E	B	B
Approach Vol, veh/h		126			113			753			392	
Approach Delay, s/veh		20.0			20.9			13.2			18.5	
Approach LOS		C			C			B			B	

Timer	1	2	3	4	5	6	7	8
Assigned Phs	1	2		4	5	6		8
Phs Duration (G+Y+Rc), s	5.8	31.3		10.7	16.5	20.5		10.7
Change Period (Y+Rc), s	5.0	6.0		5.0	5.0	6.0		5.0
Max Green Setting (Gmax), s	15.0	79.0		24.0	30.0	64.0		24.0
Max Q Clear Time (g_c+I1), s	2.6	7.9		4.8	10.7	9.5		6.5
Green Ext Time (p_c), s	0.0	5.7		0.5	1.0	4.8		0.4

Intersection Summary	
HCM 2010 Ctrl Delay	16.0
HCM 2010 LOS	B

Movement	EBL	EBT	EBR	WBL	WBT	WBR	NBL	NBT	NBR	SBL	SBT	SBR
Lane Configurations												
Traffic Volume (veh/h)	55	20	230	45	15	5	160	540	30	15	565	60
Future Volume (veh/h)	55	20	230	45	15	5	160	540	30	15	565	60
Number	7	4	14	3	8	18	5	2	12	1	6	16
Initial Q (Qb), veh	0	0	0	0	0	0	0	0	0	0	0	0
Ped-Bike Adj(A_pbT)	0.98		0.98	0.99		0.98	1.00		1.00	1.00		1.00
Parking Bus, Adj	1.00	1.00	1.00	1.00	1.00	1.00	1.00	1.00	1.00	1.00	1.00	1.00
Adj Sat Flow, veh/h/ln	1900	1863	1863	1863	1863	1900	1863	1863	1863	1863	1863	1863
Adj Flow Rate, veh/h	60	22	21	49	16	1	174	587	0	16	614	27
Adj No. of Lanes	0	1	1	1	1	0	1	1	1	1	1	1
Peak Hour Factor	0.92	0.92	0.92	0.92	0.92	0.92	0.92	0.92	0.92	0.92	0.92	0.92
Percent Heavy Veh, %	2	2	2	2	2	2	2	2	2	2	2	2
Cap, veh/h	268	78	219	280	244	15	428	941	800	404	796	674
Arrive On Green	0.14	0.14	0.14	0.14	0.14	0.14	0.09	0.51	0.00	0.01	0.43	0.43
Sat Flow, veh/h	959	556	1555	1339	1733	108	1774	1863	1583	1774	1863	1578
Grp Volume(v), veh/h	82	0	21	49	0	17	174	587	0	16	614	27
Grp Sat Flow(s),veh/h/ln	1515	0	1555	1339	0	1841	1774	1863	1583	1774	1863	1578
Q Serve(g_s), s	1.4	0.0	0.6	1.6	0.0	0.4	2.4	10.7	0.0	0.2	13.2	0.5
Cycle Q Clear(g_c), s	2.2	0.0	0.6	3.8	0.0	0.4	2.4	10.7	0.0	0.2	13.2	0.5
Prop In Lane	0.73		1.00	1.00		0.06	1.00		1.00	1.00		1.00
Lane Grp Cap(c), veh/h	347	0	219	280	0	259	428	941	800	404	796	674
V/C Ratio(X)	0.24	0.00	0.10	0.17	0.00	0.07	0.41	0.62	0.00	0.04	0.77	0.04
Avail Cap(c_a), veh/h	925	0	830	807	0	983	836	2029	1724	951	2029	1718
HCM Platoon Ratio	1.00	1.00	1.00	1.00	1.00	1.00	1.00	1.00	1.00	1.00	1.00	1.00
Upstream Filter(I)	1.00	0.00	1.00	1.00	0.00	1.00	1.00	1.00	0.00	1.00	1.00	1.00
Uniform Delay (d), s/veh	18.2	0.0	17.5	19.9	0.0	17.4	8.3	8.4	0.0	8.0	11.5	7.8
Incr Delay (d2), s/veh	0.3	0.0	0.2	0.3	0.0	0.1	0.6	0.7	0.0	0.0	1.6	0.0
Initial Q Delay(d3),s/veh	0.0	0.0	0.0	0.0	0.0	0.0	0.0	0.0	0.0	0.0	0.0	0.0
%ile BackOfQ(50%),veh/ln	1.0	0.0	0.2	0.6	0.0	0.2	1.2	5.6	0.0	0.1	7.0	0.2
LnGrp Delay(d),s/veh	18.5	0.0	17.7	20.2	0.0	17.5	8.9	9.0	0.0	8.0	13.1	7.8
LnGrp LOS	B		B	C		B	A	A		A	B	A
Approach Vol, veh/h		103			66			761			657	
Approach Delay, s/veh		18.3			19.5			9.0			12.7	
Approach LOS		B			B			A			B	

Timer	1	2	3	4	5	6	7	8
Assigned Phs	1	2		4	5	6		8
Phs Duration (G+Y+Rc), s	5.6	29.7		11.6	9.2	26.0		11.6
Change Period (Y+Rc), s	5.0	6.0		5.0	5.0	6.0		5.0
Max Green Setting (Gmax), s	15.0	51.0		25.0	15.0	51.0		25.0
Max Q Clear Time (g_c+I1), s	2.2	12.7		4.2	4.4	15.2		5.8
Green Ext Time (p_c), s	0.0	4.3		0.4	0.3	4.6		0.2

Intersection Summary	
HCM 2010 Ctrl Delay	11.6
HCM 2010 LOS	B

Movement	EBL	EBT	EBR	WBL	WBT	WBR	NBL	NBT	NBR	SBL	SBT	SBR
Lane Configurations												
Traffic Volume (veh/h)	45	70	85	205	75	85	80	615	170	155	645	50
Future Volume (veh/h)	45	70	85	205	75	85	80	615	170	155	645	50
Number	7	4	14	3	8	18	5	2	12	1	6	16
Initial Q (Qb), veh	0	0	0	0	0	0	0	0	0	0	0	0
Ped-Bike Adj(A_pbT)	1.00		0.99	1.00		1.00	1.00		1.00	1.00		1.00
Parking Bus, Adj	1.00	1.00	1.00	1.00	1.00	1.00	1.00	1.00	1.00	1.00	1.00	1.00
Adj Sat Flow, veh/h/ln	1863	1863	1900	1863	1863	1863	1863	1863	1863	1863	1863	1863
Adj Flow Rate, veh/h	49	76	60	223	82	16	87	668	118	168	701	21
Adj No. of Lanes	1	1	0	1	1	1	1	1	1	1	1	1
Peak Hour Factor	0.92	0.92	0.92	0.92	0.92	0.92	0.92	0.92	0.92	0.92	0.92	0.92
Percent Heavy Veh, %	2	2	2	2	2	2	2	2	2	2	2	2
Cap, veh/h	63	107	84	261	415	353	114	764	649	206	861	731
Arrive On Green	0.04	0.11	0.11	0.15	0.22	0.22	0.06	0.41	0.41	0.12	0.46	0.46
Sat Flow, veh/h	1774	959	757	1774	1863	1583	1774	1863	1583	1774	1863	1582
Grp Volume(v), veh/h	49	0	136	223	82	16	87	668	118	168	701	21
Grp Sat Flow(s),veh/h/ln	1774	0	1717	1774	1863	1583	1774	1863	1583	1774	1863	1582
Q Serve(g_s), s	2.5	0.0	7.1	11.4	3.3	0.7	4.5	30.7	4.4	8.6	30.2	0.7
Cycle Q Clear(g_c), s	2.5	0.0	7.1	11.4	3.3	0.7	4.5	30.7	4.4	8.6	30.2	0.7
Prop In Lane	1.00		0.44	1.00		1.00	1.00		1.00	1.00		1.00
Lane Grp Cap(c), veh/h	63	0	191	261	415	353	114	764	649	206	861	731
V/C Ratio(X)	0.78	0.00	0.71	0.85	0.20	0.05	0.77	0.87	0.18	0.81	0.81	0.03
Avail Cap(c_a), veh/h	382	0	388	382	421	358	477	1303	1107	477	1303	1106
HCM Platoon Ratio	1.00	1.00	1.00	1.00	1.00	1.00	1.00	1.00	1.00	1.00	1.00	1.00
Upstream Filter(I)	1.00	0.00	1.00	1.00	1.00	1.00	1.00	1.00	1.00	1.00	1.00	1.00
Uniform Delay (d), s/veh	44.4	0.0	39.9	38.6	29.4	28.3	42.8	25.2	17.5	40.1	21.6	13.6
Incr Delay (d2), s/veh	18.0	0.0	4.8	11.8	0.2	0.1	10.2	3.7	0.1	7.6	2.5	0.0
Initial Q Delay(d3),s/veh	0.0	0.0	0.0	0.0	0.0	0.0	0.0	0.0	0.0	0.0	0.0	0.0
%ile BackOfQ(50%),veh/ln	1.6	0.0	3.6	6.4	1.7	0.3	2.5	16.5	2.0	4.6	16.0	0.3
LnGrp Delay(d),s/veh	62.4	0.0	44.7	50.5	29.6	28.4	53.0	28.9	17.6	47.7	24.0	13.6
LnGrp LOS	E		D	D	C	C	D	C	B	D	C	B
Approach Vol, veh/h		185			321			873			890	
Approach Delay, s/veh		49.4			44.0			29.8			28.2	
Approach LOS		D			D			C			C	

Timer	1	2	3	4	5	6	7	8
Assigned Phs	1	2	3	4	5	6	7	8
Phs Duration (G+Y+Rc), s	15.8	43.1	18.7	15.3	11.0	48.0	8.3	25.7
Change Period (Y+Rc), s	5.0	5.0	5.0	5.0	5.0	5.0	5.0	5.0
Max Green Setting (Gmax), s	25.0	65.0	20.0	21.0	25.0	65.0	20.0	21.0
Max Q Clear Time (g_c+I1), s	10.6	32.7	13.4	9.1	6.5	32.2	4.5	5.3
Green Ext Time (p_c), s	0.4	5.4	0.3	0.5	0.2	5.5	0.1	0.3

Intersection Summary	
HCM 2010 Ctrl Delay	32.8
HCM 2010 LOS	C

Movement	EBL	EBT	EBR	WBL	WBT	WBR	NBL	NBT	NBR	SBL	SBT	SBR
Lane Configurations												
Traffic Volume (veh/h)	70	10	595	10	0	5	410	795	5	0	885	65
Future Volume (veh/h)	70	10	595	10	0	5	410	795	5	0	885	65
Number	3	8	18	7	4	14	1	6	16	5	2	12
Initial Q (Qb), veh	0	0	0	0	0	0	0	0	0	0	0	0
Ped-Bike Adj(A_pbT)	1.00		1.00	1.00		1.00	1.00		1.00	1.00		1.00
Parking Bus, Adj	1.00	1.00	1.00	1.00	1.00	1.00	1.00	1.00	1.00	1.00	1.00	1.00
Adj Sat Flow, veh/h/ln	1900	1863	1863	1900	1863	1900	1863	1863	1900	1863	1863	1863
Adj Flow Rate, veh/h	76	11	0	11	0	1	446	864	5	0	962	33
Adj No. of Lanes	0	1	1	0	1	0	1	2	0	1	2	1
Peak Hour Factor	0.92	0.92	0.92	0.92	0.92	0.92	0.92	0.92	0.92	0.92	0.92	0.92
Percent Heavy Veh, %	2	2	2	2	2	2	2	2	2	2	2	2
Cap, veh/h	194	14	120	210	4	10	504	2766	16	3	1506	671
Arrive On Green	0.09	0.08	0.00	0.09	0.00	0.08	0.28	0.77	0.77	0.00	0.43	0.43
Sat Flow, veh/h	1287	186	1583	1459	48	137	1774	3608	21	1774	3539	1578
Grp Volume(v), veh/h	87	0	0	12	0	0	446	424	445	0	962	33
Grp Sat Flow(s),veh/h/ln	1473	0	1583	1645	0	0	1774	1770	1859	1774	1770	1578
Q Serve(g_s), s	3.5	0.0	0.0	0.0	0.0	0.0	16.8	5.1	5.1	0.0	15.0	0.9
Cycle Q Clear(g_c), s	4.0	0.0	0.0	0.4	0.0	0.0	16.8	5.1	5.1	0.0	15.0	0.9
Prop In Lane	0.87		1.00	0.92		0.08	1.00		0.01	1.00		1.00
Lane Grp Cap(c), veh/h	229	0	120	247	0	0	504	1357	1425	3	1506	671
V/C Ratio(X)	0.38	0.00	0.00	0.05	0.00	0.00	0.89	0.31	0.31	0.00	0.64	0.05
Avail Cap(c_a), veh/h	742	0	679	685	0	0	1801	1442	1515	1801	2884	1286
HCM Platoon Ratio	1.00	1.00	1.00	1.00	1.00	1.00	1.00	1.00	1.00	1.00	1.00	1.00
Upstream Filter(I)	1.00	0.00	0.00	1.00	0.00	0.00	1.00	1.00	1.00	0.00	1.00	1.00
Uniform Delay (d), s/veh	31.2	0.0	0.0	29.6	0.0	0.0	24.0	2.5	2.5	0.0	15.8	11.8
Incr Delay (d2), s/veh	1.0	0.0	0.0	0.1	0.0	0.0	2.1	0.3	0.3	0.0	1.0	0.1
Initial Q Delay(d3),s/veh	0.0	0.0	0.0	0.0	0.0	0.0	0.0	0.0	0.0	0.0	0.0	0.0
%ile BackOfQ(50%),veh/ln	1.7	0.0	0.0	0.2	0.0	0.0	8.5	2.6	2.7	0.0	7.4	0.4
LnGrp Delay(d),s/veh	32.2	0.0	0.0	29.7	0.0	0.0	26.1	2.8	2.8	0.0	16.8	11.8
LnGrp LOS	C			C			C	A	A		B	B
Approach Vol, veh/h		87			12			1315			995	
Approach Delay, s/veh		32.2			29.7			10.7			16.7	
Approach LOS		C			C			B			B	

Timer	1	2	3	4	5	6	7	8
Assigned Phs	1	2		4	5	6		8
Phs Duration (G+Y+Rc), s	23.9	35.8		10.3	0.0	59.6		10.3
Change Period (Y+Rc), s	4.0	6.0		5.0	4.0	6.0		5.0
Max Green Setting (Gmax), s	71.0	57.0		27.0	71.0	57.0		30.0
Max Q Clear Time (g_c+I1), s	19.8	17.0		2.4	0.0	7.1		6.0
Green Ext Time (p_c), s	1.0	12.8		0.0	0.0	10.1		0.3

Intersection Summary	
HCM 2010 Ctrl Delay	14.0
HCM 2010 LOS	B

Movement	EBL	EBT	EBR	WBL	WBT	WBR	NBL	NBT	NBR	SBL	SBT	SBR
Lane Configurations												
Traffic Volume (veh/h)	65	5	145	15	5	15	105	1140	20	10	1440	70
Future Volume (veh/h)	65	5	145	15	5	15	105	1140	20	10	1440	70
Number	3	8	18	7	4	14	1	6	16	5	2	12
Initial Q (Qb), veh	0	0	0	0	0	0	0	0	0	0	0	0
Ped-Bike Adj(A_pbT)	0.98		0.98	0.98		0.98	1.00		1.00	1.00		1.00
Parking Bus, Adj	1.00	1.00	1.00	1.00	1.00	1.00	1.00	1.00	1.00	1.00	1.00	1.00
Adj Sat Flow, veh/h/ln	1900	1863	1863	1900	1863	1900	1863	1863	1900	1863	1863	1863
Adj Flow Rate, veh/h	71	5	6	16	5	1	114	1239	21	11	1565	47
Adj No. of Lanes	0	1	1	0	1	0	1	2	0	1	2	1
Peak Hour Factor	0.92	0.92	0.92	0.92	0.92	0.92	0.92	0.92	0.92	0.92	0.92	0.92
Percent Heavy Veh, %	2	2	2	2	2	2	2	2	2	2	2	2
Cap, veh/h	217	12	143	137	33	4	145	2588	44	14	2311	1031
Arrive On Green	0.10	0.09	0.09	0.10	0.09	0.09	0.08	0.73	0.73	0.01	0.65	0.65
Sat Flow, veh/h	1419	131	1547	657	360	48	1774	3561	60	1774	3539	1580
Grp Volume(v), veh/h	76	0	6	22	0	0	114	615	645	11	1565	47
Grp Sat Flow(s),veh/h/ln	1550	0	1547	1065	0	0	1774	1770	1852	1774	1770	1580
Q Serve(g_s), s	0.0	0.0	0.3	0.2	0.0	0.0	5.1	11.8	11.8	0.5	22.3	0.9
Cycle Q Clear(g_c), s	3.3	0.0	0.3	3.5	0.0	0.0	5.1	11.8	11.8	0.5	22.3	0.9
Prop In Lane	0.93		1.00	0.73		0.05	1.00		0.03	1.00		1.00
Lane Grp Cap(c), veh/h	248	0	143	188	0	0	145	1286	1346	14	2311	1031
V/C Ratio(X)	0.31	0.00	0.04	0.12	0.00	0.00	0.79	0.48	0.48	0.76	0.68	0.05
Avail Cap(c_a), veh/h	517	0	439	470	0	0	460	1878	1965	241	3319	1481
HCM Platoon Ratio	1.00	1.00	1.00	1.00	1.00	1.00	1.00	1.00	1.00	1.00	1.00	1.00
Upstream Filter(I)	1.00	0.00	1.00	1.00	0.00	0.00	1.00	1.00	1.00	1.00	1.00	1.00
Uniform Delay (d), s/veh	34.4	0.0	33.5	33.8	0.0	0.0	36.5	4.6	4.6	40.1	8.7	5.0
Incr Delay (d2), s/veh	0.3	0.0	0.0	0.1	0.0	0.0	3.5	0.6	0.6	26.0	0.8	0.0
Initial Q Delay(d3),s/veh	0.0	0.0	0.0	0.0	0.0	0.0	0.0	0.0	0.0	0.0	0.0	0.0
%ile BackOfQ(50%),veh/ln	1.6	0.0	0.1	0.5	0.0	0.0	2.6	5.9	6.1	0.3	10.9	0.4
LnGrp Delay(d),s/veh	34.7	0.0	33.5	33.9	0.0	0.0	40.0	5.2	5.2	66.1	9.5	5.1
LnGrp LOS	C		C	C			D	A	A	E	A	A
Approach Vol, veh/h		82			22			1374			1623	
Approach Delay, s/veh		34.6			33.9			8.1			9.8	
Approach LOS		C			C			A			A	

Timer	1	2	3	4	5	6	7	8
Assigned Phs	1	2		4	5	6		8
Phs Duration (G+Y+Rc), s	10.6	57.9		12.5	4.7	63.9		12.5
Change Period (Y+Rc), s	4.0	5.0		5.0	4.0	5.0		5.0
Max Green Setting (Gmax), s	21.6	76.0		23.0	11.0	86.0		23.0
Max Q Clear Time (g_c+I1), s	7.1	24.3		5.5	2.5	13.8		5.3
Green Ext Time (p_c), s	0.1	28.6		0.0	0.0	19.9		0.1

Intersection Summary	
HCM 2010 Ctrl Delay	9.9
HCM 2010 LOS	A

Movement	EBL	EBT	EBR	WBL	WBT	WBR	NBL	NBT	NBR	SBL	SBT	SBR
Lane Configurations												
Traffic Volume (veh/h)	70	5	180	45	5	40	110	1200	50	35	1510	80
Future Volume (veh/h)	70	5	180	45	5	40	110	1200	50	35	1510	80
Number	3	8	18	7	4	14	1	6	16	5	2	12
Initial Q (Qb), veh	0	0	0	0	0	0	0	0	0	0	0	0
Ped-Bike Adj(A_pbT)	1.00		1.00	1.00		1.00	1.00		1.00	1.00		1.00
Parking Bus, Adj	1.00	1.00	1.00	1.00	1.00	1.00	1.00	1.00	1.00	1.00	1.00	1.00
Adj Sat Flow, veh/h/ln	1900	1863	1863	1863	1863	1900	1863	1863	1863	1863	1863	1863
Adj Flow Rate, veh/h	76	5	12	49	5	3	120	1304	34	38	1641	49
Adj No. of Lanes	0	1	1	1	1	0	1	2	1	1	2	1
Peak Hour Factor	0.92	0.92	0.92	0.92	0.92	0.92	0.92	0.92	0.92	0.92	0.92	0.92
Percent Heavy Veh, %	2	2	2	2	2	2	2	2	2	2	2	2
Cap, veh/h	263	15	222	204	154	92	153	2309	1033	61	2126	951
Arrive On Green	0.15	0.14	0.14	0.14	0.14	0.14	0.09	0.65	0.65	0.03	0.60	0.60
Sat Flow, veh/h	1296	104	1577	1386	1090	654	1774	3539	1583	1774	3539	1583
Grp Volume(v), veh/h	81	0	12	49	0	8	120	1304	34	38	1641	49
Grp Sat Flow(s),veh/h/ln	1400	0	1577	1386	0	1744	1774	1770	1583	1774	1770	1583
Q Serve(g_s), s	4.3	0.0	0.6	2.9	0.0	0.3	5.8	17.7	0.7	1.8	30.1	1.1
Cycle Q Clear(g_c), s	4.7	0.0	0.6	7.6	0.0	0.3	5.8	17.7	0.7	1.8	30.1	1.1
Prop In Lane	0.94		1.00	1.00		0.38	1.00		1.00	1.00		1.00
Lane Grp Cap(c), veh/h	293	0	222	204	0	246	153	2309	1033	61	2126	951
V/C Ratio(X)	0.28	0.00	0.05	0.24	0.00	0.03	0.79	0.56	0.03	0.62	0.77	0.05
Avail Cap(c_a), veh/h	484	0	434	390	0	481	428	2803	1254	244	2438	1091
HCM Platoon Ratio	1.00	1.00	1.00	1.00	1.00	1.00	1.00	1.00	1.00	1.00	1.00	1.00
Upstream Filter(I)	1.00	0.00	1.00	1.00	0.00	1.00	1.00	1.00	1.00	1.00	1.00	1.00
Uniform Delay (d), s/veh	33.8	0.0	32.4	37.6	0.0	32.3	39.0	8.3	5.4	41.5	12.9	7.2
Incr Delay (d2), s/veh	0.5	0.0	0.1	0.6	0.0	0.1	3.3	0.5	0.0	3.8	1.8	0.0
Initial Q Delay(d3),s/veh	0.0	0.0	0.0	0.0	0.0	0.0	0.0	0.0	0.0	0.0	0.0	0.0
%ile BackOfQ(50%),veh/ln	1.8	0.0	0.3	1.2	0.0	0.2	3.0	8.7	0.3	1.0	15.1	0.5
LnGrp Delay(d),s/veh	34.3	0.0	32.5	38.2	0.0	32.3	42.3	8.8	5.4	45.3	14.8	7.2
LnGrp LOS	C		C	D		C	D	A	A	D	B	A
Approach Vol, veh/h		93			57			1458			1728	
Approach Delay, s/veh		34.1			37.4			11.5			15.2	
Approach LOS		C			D			B			B	

Timer	1	2	3	4	5	6	7	8
Assigned Phs	1	2		4	5	6		8
Phs Duration (G+Y+Rc), s	11.5	58.3		17.3	7.0	62.8		17.3
Change Period (Y+Rc), s	4.0	6.0		5.0	4.0	6.0		5.0
Max Green Setting (Gmax), s	21.0	60.0		24.0	12.0	69.0		24.0
Max Q Clear Time (g_c+I1), s	7.8	32.1		9.6	3.8	19.7		6.7
Green Ext Time (p_c), s	0.2	20.3		0.1	0.0	21.2		0.2

Intersection Summary	
HCM 2010 Ctrl Delay	14.5
HCM 2010 LOS	B

Movement	EBL	EBT	EBR	WBL	WBT	WBR	NBL	NBT	NBR	SBL	SBT	SBR
Lane Configurations												
Traffic Volume (veh/h)	270	5	445	15	5	20	290	1290	15	60	1485	165
Future Volume (veh/h)	270	5	445	15	5	20	290	1290	15	60	1485	165
Number	3	8	18	7	4	14	1	6	16	5	2	12
Initial Q (Qb), veh	0	0	0	0	0	0	0	0	0	0	0	0
Ped-Bike Adj(A_pbT)	1.00		1.00	1.00		1.00	1.00		1.00	1.00		1.00
Parking Bus, Adj	1.00	1.00	1.00	1.00	1.00	1.00	1.00	1.00	1.00	1.00	1.00	1.00
Adj Sat Flow, veh/h/ln	1863	1863	1863	1900	1863	1900	1863	1863	1900	1863	1863	1863
Adj Flow Rate, veh/h	297	0	269	16	5	7	315	1402	16	65	1614	149
Adj No. of Lanes	2	0	2	0	1	0	2	2	0	1	2	1
Peak Hour Factor	0.92	0.92	0.92	0.92	0.92	0.92	0.92	0.92	0.92	0.92	0.92	0.92
Percent Heavy Veh, %	2	2	2	2	2	2	2	2	2	2	2	2
Cap, veh/h	459	0	779	46	14	20	428	2294	26	116	2058	1113
Arrive On Green	0.13	0.00	0.12	0.05	0.05	0.02	0.12	0.64	0.63	0.07	0.58	0.58
Sat Flow, veh/h	3548	0	3167	992	310	434	3442	3584	41	1774	3539	1583
Grp Volume(v), veh/h	297	0	269	28	0	0	315	692	726	65	1614	149
Grp Sat Flow(s),veh/h/ln	1774	0	1583	1737	0	0	1721	1770	1856	1774	1770	1583
Q Serve(g_s), s	10.7	0.0	9.4	2.1	0.0	0.0	11.9	31.1	31.2	4.8	47.3	4.2
Cycle Q Clear(g_c), s	10.7	0.0	9.4	2.1	0.0	0.0	11.9	31.1	31.2	4.8	47.3	4.2
Prop In Lane	1.00		1.00	0.57		0.25	1.00		0.02	1.00		1.00
Lane Grp Cap(c), veh/h	459	0	779	80	0	0	428	1133	1188	116	2058	1113
V/C Ratio(X)	0.65	0.00	0.35	0.35	0.00	0.00	0.74	0.61	0.61	0.56	0.78	0.13
Avail Cap(c_a), veh/h	895	0	1169	399	0	0	1481	2547	2671	197	3965	1966
HCM Platoon Ratio	1.00	1.00	1.00	1.00	1.00	1.00	1.00	1.00	1.00	1.00	1.00	1.00
Upstream Filter(I)	1.00	0.00	1.00	1.00	0.00	0.00	1.00	1.00	1.00	1.00	1.00	1.00
Uniform Delay (d), s/veh	55.8	0.0	41.9	62.7	0.0	0.0	56.9	14.3	14.4	61.1	21.7	6.6
Incr Delay (d2), s/veh	0.6	0.0	0.1	1.0	0.0	0.0	0.9	0.8	0.7	1.6	1.0	0.1
Initial Q Delay(d3),s/veh	0.0	0.0	0.0	0.0	0.0	0.0	0.0	0.0	0.0	0.0	0.0	0.0
%ile BackOfQ(50%),veh/ln	5.3	0.0	4.1	1.0	0.0	0.0	5.7	15.4	16.2	2.4	23.4	2.6
LnGrp Delay(d),s/veh	56.3	0.0	42.0	63.6	0.0	0.0	57.8	15.1	15.1	62.7	22.7	6.6
LnGrp LOS	E		D	E			E	B	B	E	C	A
Approach Vol, veh/h		566			28			1733			1828	
Approach Delay, s/veh		49.5			63.6			22.9			22.8	
Approach LOS		D			E			C			C	

Timer	1	2	3	4	5	6	7	8
Assigned Phs	1	2		4	5	6		8
Phs Duration (G+Y+Rc), s	20.7	82.4		10.2	12.8	90.3		21.4
Change Period (Y+Rc), s	6.0	6.0		7.0	6.0	6.0		7.0
Max Green Setting (Gmax), s	56.0	149.0		28.0	13.0	192.0		31.0
Max Q Clear Time (g_c+I1), s	13.9	49.3		4.1	6.8	33.2		12.7
Green Ext Time (p_c), s	0.9	27.1		0.0	0.0	15.9		1.7

Intersection Summary	
HCM 2010 Ctrl Delay	26.7
HCM 2010 LOS	C

Notes

Movement	EBL	EBT	EBR	WBL	WBT	WBR	NBL	NBT	NBR	SBL	SBT	SBR
Lane Configurations												
Traffic Volume (veh/h)	5	0	5	135	5	65	5	1460	90	95	1910	10
Future Volume (veh/h)	5	0	5	135	5	65	5	1460	90	95	1910	10
Number	3	8	18	7	4	14	1	6	16	5	2	12
Initial Q (Qb), veh	0	0	0	0	0	0	0	0	0	0	0	0
Ped-Bike Adj(A_pbT)	1.00		1.00	1.00		1.00	1.00		1.00	1.00		1.00
Parking Bus, Adj	1.00	1.00	1.00	1.00	1.00	1.00	1.00	1.00	1.00	1.00	1.00	1.00
Adj Sat Flow, veh/h/ln	1900	1863	1900	1863	1863	1900	1863	1863	1900	1863	1863	1900
Adj Flow Rate, veh/h	5	0	1	147	5	5	5	1587	95	103	2076	11
Adj No. of Lanes	0	1	0	1	1	0	1	2	0	1	2	0
Peak Hour Factor	0.92	0.92	0.92	0.92	0.92	0.92	0.92	0.92	0.92	0.92	0.92	0.92
Percent Heavy Veh, %	2	2	2	2	2	2	2	2	2	2	2	2
Cap, veh/h	194	5	30	234	107	107	11	2409	143	129	2801	15
Arrive On Green	0.13	0.00	0.12	0.13	0.13	0.12	0.01	0.94	0.93	0.07	0.78	0.77
Sat Flow, veh/h	1140	37	235	1410	856	856	1774	3395	202	1774	3610	19
Grp Volume(v), veh/h	6	0	0	147	0	10	5	823	859	103	1017	1070
Grp Sat Flow(s),veh/h/ln	1412	0	0	1410	0	1712	1774	1770	1827	1774	1770	1859
Q Serve(g_s), s	0.0	0.0	0.0	12.4	0.0	0.7	0.4	8.9	9.3	7.4	39.3	39.5
Cycle Q Clear(g_c), s	0.7	0.0	0.0	13.0	0.0	0.7	0.4	8.9	9.3	7.4	39.3	39.5
Prop In Lane	0.83		0.17	1.00		0.50	1.00		0.11	1.00		0.01
Lane Grp Cap(c), veh/h	228	0	0	234	0	215	11	1256	1296	129	1373	1443
V/C Ratio(X)	0.03	0.00	0.00	0.63	0.00	0.05	0.44	0.66	0.66	0.80	0.74	0.74
Avail Cap(c_a), veh/h	312	0	0	318	0	316	150	1256	1296	150	1373	1443
HCM Platoon Ratio	1.00	1.00	1.00	1.00	1.00	1.00	1.33	1.33	1.33	1.00	1.00	1.00
Upstream Filter(I)	1.00	0.00	0.00	1.00	0.00	1.00	0.78	0.78	0.78	1.00	1.00	1.00
Uniform Delay (d), s/veh	50.0	0.0	0.0	55.3	0.0	50.2	64.2	1.3	1.4	59.3	7.7	7.7
Incr Delay (d2), s/veh	0.0	0.0	0.0	2.8	0.0	0.1	7.7	2.1	2.1	19.3	3.6	3.5
Initial Q Delay(d3),s/veh	0.0	0.0	0.0	0.0	0.0	0.0	0.0	0.0	0.0	0.0	0.0	0.0
%ile BackOfQ(50%),veh/ln	0.2	0.0	0.0	5.3	0.0	0.3	0.2	4.6	4.8	4.3	20.3	21.3
LnGrp Delay(d),s/veh	50.0	0.0	0.0	58.1	0.0	50.3	71.9	3.4	3.4	78.6	11.3	11.2
LnGrp LOS	D			E		D	E	A	A	E	B	B
Approach Vol, veh/h		6			157			1687			2190	
Approach Delay, s/veh		50.0			57.6			3.6			14.4	
Approach LOS		D			E			A			B	

Timer	1	2	3	4	5	6	7	8
Assigned Phs	1	2		4	5	6		8
Phs Duration (G+Y+Rc), s	4.8	104.9		20.3	13.5	96.2		20.3
Change Period (Y+Rc), s	4.0	5.0		5.0	4.0	5.0		5.0
Max Green Setting (Gmax), s	11.0	82.0		23.0	11.0	82.0		23.0
Max Q Clear Time (g_c+I1), s	2.4	41.5		15.0	9.4	11.3		2.7
Green Ext Time (p_c), s	0.0	33.6		0.3	0.0	35.6		0.0

Intersection Summary	
HCM 2010 Ctrl Delay	11.6
HCM 2010 LOS	B

Movement	EBL	EBT	EBR	WBL	WBT	WBR	NBL	NBT	NBR	SBL	SBT	SBR
Lane Configurations												
Traffic Volume (veh/h)	145	5	15	65	5	15	15	1395	15	10	1680	275
Future Volume (veh/h)	145	5	15	65	5	15	15	1395	15	10	1680	275
Number	3	8	18	7	4	14	1	6	16	5	2	12
Initial Q (Qb), veh	0	0	0	0	0	0	0	0	0	0	0	0
Ped-Bike Adj(A_pbT)	1.00		1.00	1.00		1.00	1.00		1.00	1.00		1.00
Parking Bus, Adj	1.00	1.00	1.00	1.00	1.00	1.00	1.00	1.00	1.00	1.00	1.00	1.00
Adj Sat Flow, veh/h/ln	1900	1863	1900	1900	1863	1900	1863	1863	1900	1863	1863	1863
Adj Flow Rate, veh/h	158	5	14	71	5	9	16	1516	15	11	1826	222
Adj No. of Lanes	0	1	0	0	1	0	1	2	0	1	2	1
Peak Hour Factor	0.92	0.92	0.92	0.92	0.92	0.92	0.92	0.92	0.92	0.92	0.92	0.92
Percent Heavy Veh, %	2	2	2	2	2	2	2	2	2	2	2	2
Cap, veh/h	239	6	17	238	18	24	19	2730	27	13	2680	1198
Arrive On Green	0.14	0.14	0.13	0.14	0.14	0.13	0.01	0.76	0.75	0.01	0.76	0.76
Sat Flow, veh/h	1336	42	118	1342	130	174	1774	3591	36	1774	3539	1582
Grp Volume(v), veh/h	177	0	0	85	0	0	16	747	784	11	1826	222
Grp Sat Flow(s),veh/h/ln	1497	0	0	1647	0	0	1774	1770	1856	1774	1770	1582
Q Serve(g_s), s	8.9	0.0	0.0	0.0	0.0	0.0	1.2	22.7	22.8	0.8	33.6	5.2
Cycle Q Clear(g_c), s	14.8	0.0	0.0	5.9	0.0	0.0	1.2	22.7	22.8	0.8	33.6	5.2
Prop In Lane	0.89		0.08	0.84		0.11	1.00		0.02	1.00		1.00
Lane Grp Cap(c), veh/h	262	0	0	281	0	0	19	1345	1412	13	2680	1198
V/C Ratio(X)	0.68	0.00	0.00	0.30	0.00	0.00	0.84	0.55	0.56	0.82	0.68	0.19
Avail Cap(c_a), veh/h	347	0	0	367	0	0	109	1345	1412	109	2680	1198
HCM Platoon Ratio	1.00	1.00	1.00	1.00	1.00	1.00	1.00	1.00	1.00	1.00	1.00	1.00
Upstream Filter(I)	1.00	0.00	0.00	1.00	0.00	0.00	0.70	0.70	0.70	0.57	0.57	0.57
Uniform Delay (d), s/veh	54.2	0.0	0.0	50.7	0.0	0.0	64.2	6.5	6.5	64.4	7.9	4.5
Incr Delay (d2), s/veh	3.3	0.0	0.0	0.6	0.0	0.0	21.7	1.2	1.1	21.8	0.8	0.2
Initial Q Delay(d3),s/veh	0.0	0.0	0.0	0.0	0.0	0.0	0.0	0.0	0.0	0.0	0.0	0.0
%ile BackOfQ(50%),veh/ln	6.4	0.0	0.0	2.8	0.0	0.0	0.7	11.4	12.0	0.5	16.5	2.3
LnGrp Delay(d),s/veh	57.5	0.0	0.0	51.3	0.0	0.0	85.9	7.6	7.6	86.3	8.7	4.7
LnGrp LOS	E			D			F	A	A	F	A	A
Approach Vol, veh/h		177			85			1547			2059	
Approach Delay, s/veh		57.5			51.3			8.4			8.7	
Approach LOS		E			D			A			A	

Timer	1	2	3	4	5	6	7	8
Assigned Phs	1	2		4	5	6		8
Phs Duration (G+Y+Rc), s	5.4	102.4		22.2	5.0	102.8		22.2
Change Period (Y+Rc), s	4.0	5.0		5.0	4.0	5.0		5.0
Max Green Setting (Gmax), s	8.0	83.0		25.0	8.0	83.0		25.0
Max Q Clear Time (g_c+I1), s	3.2	35.6		7.9	2.8	24.8		16.8
Green Ext Time (p_c), s	0.0	40.8		0.2	0.0	36.3		0.4

Intersection Summary	
HCM 2010 Ctrl Delay	11.8
HCM 2010 LOS	B

Movement	EBL	EBT	EBR	WBL	WBT	WBR	NBL	NBT	NBR	SBL	SBT	SBR
Lane Configurations												
Traffic Volume (veh/h)	205	20	50	90	20	20	60	1410	60	15	1685	140
Future Volume (veh/h)	205	20	50	90	20	20	60	1410	60	15	1685	140
Number	3	8	18	7	4	14	1	6	16	5	2	12
Initial Q (Qb), veh	0	0	0	0	0	0	0	0	0	0	0	0
Ped-Bike Adj(A_pbT)	1.00		1.00	1.00		1.00	1.00		0.99	1.00		1.00
Parking Bus, Adj	1.00	1.00	1.00	1.00	1.00	1.00	1.00	1.00	1.00	1.00	1.00	1.00
Adj Sat Flow, veh/h/ln	1900	1863	1863	1863	1863	1900	1863	1863	1900	1863	1863	1900
Adj Flow Rate, veh/h	223	22	12	98	22	4	65	1533	63	16	1832	148
Adj No. of Lanes	0	1	1	1	1	0	1	2	0	1	2	0
Peak Hour Factor	0.92	0.92	0.92	0.92	0.92	0.92	0.92	0.92	0.92	0.92	0.92	0.92
Percent Heavy Veh, %	2	2	2	2	2	2	2	2	2	2	2	2
Cap, veh/h	304	25	327	398	318	58	83	2389	98	19	2171	173
Arrive On Green	0.21	0.21	0.21	0.21	0.21	0.20	0.06	0.92	0.91	0.01	0.87	0.86
Sat Flow, veh/h	1209	119	1576	1381	1533	279	1774	3464	142	1774	3321	265
Grp Volume(v), veh/h	245	0	12	98	0	26	65	781	815	16	965	1015
Grp Sat Flow(s),veh/h/ln	1328	0	1576	1381	0	1812	1774	1770	1837	1774	1770	1816
Q Serve(g_s), s	22.1	0.0	0.8	0.0	0.0	1.5	4.7	11.5	11.8	1.2	33.7	37.3
Cycle Q Clear(g_c), s	23.6	0.0	0.8	6.3	0.0	1.5	4.7	11.5	11.8	1.2	33.7	37.3
Prop In Lane	0.91		1.00	1.00		0.15	1.00		0.08	1.00		0.15
Lane Grp Cap(c), veh/h	328	0	327	398	0	376	83	1220	1267	19	1157	1187
V/C Ratio(X)	0.75	0.00	0.04	0.25	0.00	0.07	0.79	0.64	0.64	0.84	0.83	0.86
Avail Cap(c_a), veh/h	372	0	376	441	0	432	109	1220	1267	109	1157	1187
HCM Platoon Ratio	1.00	1.00	1.00	1.00	1.00	1.00	1.33	1.33	1.33	1.33	1.33	1.33
Upstream Filter(I)	1.00	0.00	1.00	1.00	0.00	1.00	0.55	0.55	0.55	0.65	0.65	0.65
Uniform Delay (d), s/veh	50.9	0.0	41.1	43.3	0.0	41.5	60.3	2.1	2.2	64.0	5.1	5.4
Incr Delay (d2), s/veh	7.1	0.0	0.0	0.3	0.0	0.1	10.1	1.4	1.4	20.3	4.7	5.4
Initial Q Delay(d3),s/veh	0.0	0.0	0.0	0.0	0.0	0.0	0.0	0.0	0.0	0.0	0.0	0.0
%ile BackOfQ(50%),veh/ln	9.2	0.0	0.3	3.0	0.0	0.8	2.5	5.6	5.8	0.7	17.1	19.3
LnGrp Delay(d),s/veh	58.0	0.0	41.2	43.7	0.0	41.6	70.4	3.6	3.6	84.3	9.9	10.8
LnGrp LOS	E		D	D		D	E	A	A	F	A	B
Approach Vol, veh/h		257			124			1661			1996	
Approach Delay, s/veh		57.2			43.2			6.2			10.9	
Approach LOS		E			D			A			B	

Timer	1	2	3	4	5	6	7	8
Assigned Phs	1	2		4	5	6		8
Phs Duration (G+Y+Rc), s	10.1	89.0		31.0	5.4	93.6		31.0
Change Period (Y+Rc), s	4.0	5.0		5.0	4.0	5.0		5.0
Max Green Setting (Gmax), s	8.0	78.0		30.0	8.0	78.0		30.0
Max Q Clear Time (g_c+I1), s	10.7	39.3		8.3	3.2	13.8		25.6
Green Ext Time (p_c), s	0.0	30.8		0.4	0.0	30.8		0.4

Intersection Summary	
HCM 2010 Ctrl Delay	12.9
HCM 2010 LOS	B

Notes

Movement	EBL	EBT	EBR	WBL	WBT	WBR	NBL	NBT	NBR	SBL	SBT	SBR
Lane Configurations												
Traffic Volume (veh/h)	65	150	90	145	130	695	80	765	195	600	995	105
Future Volume (veh/h)	65	150	90	145	130	695	80	765	195	600	995	105
Number	7	4	14	3	8	18	1	6	16	5	2	12
Initial Q (Qb), veh	0	0	0	0	0	0	0	0	0	0	0	0
Ped-Bike Adj(A_pbT)	0.98		0.96	1.00		0.97	1.00		0.99	1.00		1.00
Parking Bus, Adj	1.00	1.00	1.00	1.00	1.00	1.00	1.00	1.00	1.00	1.00	1.00	1.00
Adj Sat Flow, veh/h/ln	1900	1863	1863	1863	1863	1863	1863	1863	1863	1863	1863	1900
Adj Flow Rate, veh/h	71	163	11	158	141	369	87	832	126	652	1082	109
Adj No. of Lanes	0	1	1	1	1	1	1	2	1	2	2	0
Peak Hour Factor	0.92	0.92	0.92	0.92	0.92	0.92	0.92	0.92	0.92	0.92	0.92	0.92
Percent Heavy Veh, %	2	2	2	2	2	2	2	2	2	2	2	2
Cap, veh/h	107	192	279	250	574	475	110	1369	604	732	1746	176
Arrive On Green	0.18	0.18	0.18	0.09	0.31	0.31	0.06	0.39	0.39	0.14	0.36	0.36
Sat Flow, veh/h	383	1040	1514	1774	1863	1542	1774	3539	1561	3442	3247	327
Grp Volume(v), veh/h	234	0	11	158	141	369	87	832	126	652	589	602
Grp Sat Flow(s),veh/h/ln	1423	0	1514	1774	1863	1542	1774	1770	1561	1721	1770	1805
Q Serve(g_s), s	18.7	0.0	0.8	9.0	7.4	28.3	6.3	24.5	7.0	24.2	35.6	35.7
Cycle Q Clear(g_c), s	20.8	0.0	0.8	9.0	7.4	28.3	6.3	24.5	7.0	24.2	35.6	35.7
Prop In Lane	0.30		1.00	1.00		1.00	1.00		1.00	1.00		0.18
Lane Grp Cap(c), veh/h	299	0	279	250	574	475	110	1369	604	732	952	970
V/C Ratio(X)	0.78	0.00	0.04	0.63	0.25	0.78	0.79	0.61	0.21	0.89	0.62	0.62
Avail Cap(c_a), veh/h	320	0	303	277	630	522	328	1369	604	953	952	970
HCM Platoon Ratio	1.00	1.00	1.00	1.00	1.00	1.00	1.00	1.00	1.00	0.67	0.67	0.67
Upstream Filter(I)	1.00	0.00	1.00	1.00	1.00	1.00	0.79	0.79	0.79	0.41	0.41	0.41
Uniform Delay (d), s/veh	51.4	0.0	43.5	38.0	33.7	40.9	60.2	31.9	26.6	54.3	30.6	30.7
Incr Delay (d2), s/veh	11.3	0.0	0.1	4.0	0.2	6.7	3.8	1.6	0.6	3.3	1.3	1.2
Initial Q Delay(d3),s/veh	0.0	0.0	0.0	0.0	0.0	0.0	0.0	0.0	0.0	0.0	0.0	0.0
%ile BackOfQ(50%),veh/ln	9.1	0.0	0.3	4.6	3.8	12.9	3.2	12.3	3.1	11.9	17.8	18.2
LnGrp Delay(d),s/veh	62.7	0.0	43.6	41.9	33.9	47.6	64.0	33.5	27.2	57.5	31.9	31.9
LnGrp LOS	E		D	D	C	D	E	C	C	E	C	C
Approach Vol, veh/h		245			668			1045			1843	
Approach Delay, s/veh		61.8			43.4			35.3			41.0	
Approach LOS		E			D			D			D	

Timer	1	2	3	4	5	6	7	8
Assigned Phs	1	2	3	4	5	6		8
Phs Duration (G+Y+Rc), s	12.0	73.9	16.1	28.0	31.7	54.3		44.1
Change Period (Y+Rc), s	4.0	5.0	5.0	5.0	4.0	5.0		5.0
Max Green Setting (Gmax), s	24.0	49.0	13.0	25.0	36.0	37.0		43.0
Max Q Clear Time (g_c+I1), s	9.3	37.7	11.0	22.8	26.2	26.5		30.3
Green Ext Time (p_c), s	0.1	7.3	0.1	0.2	1.5	5.9		2.0

Intersection Summary	
HCM 2010 Ctrl Delay	41.2
HCM 2010 LOS	D

Notes

Intersection	
Int Delay, s/veh	0.9

Movement	WBL	WBR	NBT	NBR	SBL	SBT
Lane Configurations		↱	↑	↱		↑
Traffic Vol, veh/h	0	95	635	110	0	840
Future Vol, veh/h	0	95	635	110	0	840
Conflicting Peds, #/hr	0	0	0	0	0	0
Sign Control	Stop	Stop	Free	Free	Free	Free
RT Channelized	-	None	-	None	-	None
Storage Length	-	0	-	0	-	-
Veh in Median Storage, #	0	-	0	-	-	0
Grade, %	0	-	0	-	-	0
Peak Hour Factor	92	92	92	92	92	92
Heavy Vehicles, %	2	2	2	2	2	2
Mvmt Flow	0	103	690	120	0	913

Major/Minor	Minor1		Major1		Major2	
Conflicting Flow All	-	690	0	0	-	-
Stage 1	-	-	-	-	-	-
Stage 2	-	-	-	-	-	-
Critical Hdwy	-	6.22	-	-	-	-
Critical Hdwy Stg 1	-	-	-	-	-	-
Critical Hdwy Stg 2	-	-	-	-	-	-
Follow-up Hdwy	-	3.318	-	-	-	-
Pot Cap-1 Maneuver	0	445	-	-	0	-
Stage 1	0	-	-	-	0	-
Stage 2	0	-	-	-	0	-
Platoon blocked, %			-	-		-
Mov Cap-1 Maneuver	-	445	-	-	-	-
Mov Cap-2 Maneuver	-	-	-	-	-	-
Stage 1	-	-	-	-	-	-
Stage 2	-	-	-	-	-	-

Approach	WB	NB	SB
HCM Control Delay, s	15.5	0	0
HCM LOS	C		

Minor Lane/Major Mvmt	NBT	NBR	WBLn1	SBT
Capacity (veh/h)	-	-	445	-
HCM Lane V/C Ratio	-	-	0.232	-
HCM Control Delay (s)	-	-	15.5	-
HCM Lane LOS	-	-	C	-
HCM 95th %tile Q(veh)	-	-	0.9	-

Intersection	
Int Delay, s/veh	9.7

Movement	EBL	EBT	EBR	WBL	WBT	WBR	NBL	NBT	NBR	SBL	SBT	SBR
Lane Configurations												
Traffic Vol, veh/h	180	90	120	5	80	5	110	5	5	5	5	175
Future Vol, veh/h	180	90	120	5	80	5	110	5	5	5	5	175
Conflicting Peds, #/hr	0	0	0	0	0	0	0	0	0	0	0	0
Sign Control	Free	Free	Free	Free	Free	Free	Stop	Stop	Stop	Stop	Stop	Stop
RT Channelized	-	-	None	-	-	None	-	-	None	-	-	None
Storage Length	100	-	-	100	-	-	-	-	-	-	-	-
Veh in Median Storage, #	-	0	-	-	0	-	-	0	-	-	0	-
Grade, %	-	0	-	-	0	-	-	0	-	-	0	-
Peak Hour Factor	92	92	92	92	92	92	92	92	92	92	92	92
Heavy Vehicles, %	2	2	2	2	2	2	2	2	2	2	2	2
Mvmt Flow	196	98	130	5	87	5	120	5	5	5	5	190

Major/Minor	Major1			Major2			Minor1			Minor2		
Conflicting Flow All	92	0	0	228	0	0	752	657	163	660	720	90
Stage 1	-	-	-	-	-	-	555	555	-	100	100	-
Stage 2	-	-	-	-	-	-	197	102	-	560	620	-
Critical Hdwy	4.12	-	-	4.12	-	-	7.12	6.52	6.22	7.12	6.52	6.22
Critical Hdwy Stg 1	-	-	-	-	-	-	6.12	5.52	-	6.12	5.52	-
Critical Hdwy Stg 2	-	-	-	-	-	-	6.12	5.52	-	6.12	5.52	-
Follow-up Hdwy	2.218	-	-	2.218	-	-	3.518	4.018	3.318	3.518	4.018	3.318
Pot Cap-1 Maneuver	1503	-	-	1340	-	-	327	385	882	376	354	968
Stage 1	-	-	-	-	-	-	516	513	-	906	812	-
Stage 2	-	-	-	-	-	-	805	811	-	513	480	-
Platoon blocked, %		-	-		-	-						
Mov Cap-1 Maneuver	1503	-	-	1340	-	-	233	334	882	331	307	968
Mov Cap-2 Maneuver	-	-	-	-	-	-	233	334	-	331	307	-
Stage 1	-	-	-	-	-	-	449	446	-	788	809	-
Stage 2	-	-	-	-	-	-	640	808	-	438	418	-

Approach	EB	WB	NB	SB
HCM Control Delay, s	3.6	0.4	35.5	10.4
HCM LOS			E	B

Minor Lane/Major Mvmt	NBLn1	EBL	EBT	EBR	WBL	WBT	WBR	SBLn1
Capacity (veh/h)	244	1503	-	-	1340	-	-	872
HCM Lane V/C Ratio	0.535	0.13	-	-	0.004	-	-	0.231
HCM Control Delay (s)	35.5	7.8	-	-	7.7	-	-	10.4
HCM Lane LOS	E	A	-	-	A	-	-	B
HCM 95th %tile Q(veh)	2.9	0.4	-	-	0	-	-	0.9

Intersection	
Int Delay, s/veh	4.6

Movement	EBL	EBT	EBR	WBL	WBT	WBR	NBL	NBT	NBR	SBL	SBT	SBR
Lane Configurations												
Traffic Vol, veh/h	20	20	50	5	25	5	45	5	5	5	5	15
Future Vol, veh/h	20	20	50	5	25	5	45	5	5	5	5	15
Conflicting Peds, #/hr	0	0	0	0	0	0	0	0	0	0	0	0
Sign Control	Free	Free	Free	Free	Free	Free	Stop	Stop	Stop	Stop	Stop	Stop
RT Channelized	-	-	None	-	-	None	-	-	None	-	-	None
Storage Length	-	-	-	-	-	-	-	-	-	-	-	-
Veh in Median Storage, #	-	0	-	-	0	-	-	0	-	-	0	-
Grade, %	-	0	-	-	0	-	-	0	-	-	0	-
Peak Hour Factor	92	92	92	92	92	92	92	92	92	92	92	92
Heavy Vehicles, %	2	2	2	2	2	2	2	2	2	2	2	2
Mvmt Flow	22	22	54	5	27	5	49	5	5	5	5	16

Major/Minor	Major1			Major2			Minor1			Minor2		
Conflicting Flow All	32	0	0	76	0	0	143	135	49	138	160	30
Stage 1	-	-	-	-	-	-	93	93	-	40	40	-
Stage 2	-	-	-	-	-	-	50	42	-	98	120	-
Critical Hdwy	4.12	-	-	4.12	-	-	7.12	6.52	6.22	7.12	6.52	6.22
Critical Hdwy Stg 1	-	-	-	-	-	-	6.12	5.52	-	6.12	5.52	-
Critical Hdwy Stg 2	-	-	-	-	-	-	6.12	5.52	-	6.12	5.52	-
Follow-up Hdwy	2.218	-	-	2.218	-	-	3.518	4.018	3.318	3.518	4.018	3.318
Pot Cap-1 Maneuver	1580	-	-	1523	-	-	826	756	1020	833	732	1044
Stage 1	-	-	-	-	-	-	914	818	-	975	862	-
Stage 2	-	-	-	-	-	-	963	860	-	908	796	-
Platoon blocked, %		-	-		-	-						
Mov Cap-1 Maneuver	1580	-	-	1523	-	-	797	742	1020	813	719	1044
Mov Cap-2 Maneuver	-	-	-	-	-	-	797	742	-	813	719	-
Stage 1	-	-	-	-	-	-	900	806	-	960	859	-
Stage 2	-	-	-	-	-	-	939	857	-	884	784	-

Approach	EB	WB	NB	SB
HCM Control Delay, s	1.6	1.1	9.8	9.1
HCM LOS			A	A

Minor Lane/Major Mvmt	NBLn1	EBL	EBT	EBR	WBL	WBT	WBR	SBLn1
Capacity (veh/h)	808	1580	-	-	1523	-	-	910
HCM Lane V/C Ratio	0.074	0.014	-	-	0.004	-	-	0.03
HCM Control Delay (s)	9.8	7.3	0	-	7.4	0	-	9.1
HCM Lane LOS	A	A	A	-	A	A	-	A
HCM 95th %tile Q(veh)	0.2	0	-	-	0	-	-	0.1

APPENDIX C

LEVEL OF SERVICE CALCULATIONS

- Future Year 2022 Scenario 3 AM Peak

Movement	EBL	EBT	EBR	WBL	WBT	WBR	NBL	NBT	NBR	SBL	SBT	SBR
Lane Configurations												
Traffic Volume (veh/h)	50	45	310	95	50	20	255	265	115	10	140	30
Future Volume (veh/h)	50	45	310	95	50	20	255	265	115	10	140	30
Number	7	4	14	3	8	18	5	2	12	1	6	16
Initial Q (Qb), veh	0	0	0	0	0	0	0	0	0	0	0	0
Ped-Bike Adj(A_pbT)	0.99		0.99	0.99		0.99	1.00		1.00	1.00		1.00
Parking Bus, Adj	1.00	1.00	1.00	1.00	1.00	1.00	1.00	1.00	1.00	1.00	1.00	1.00
Adj Sat Flow, veh/h/ln	1900	1863	1863	1863	1863	1900	1863	1863	1863	1863	1863	1863
Adj Flow Rate, veh/h	54	49	44	103	54	11	277	288	60	11	152	8
Adj No. of Lanes	0	1	1	1	1	0	1	1	1	1	1	1
Peak Hour Factor	0.92	0.92	0.92	0.92	0.92	0.92	0.92	0.92	0.92	0.92	0.92	0.92
Percent Heavy Veh, %	2	2	2	2	2	2	2	2	2	2	2	2
Cap, veh/h	235	169	265	326	254	52	364	814	692	15	448	381
Arrive On Green	0.17	0.17	0.17	0.17	0.17	0.17	0.21	0.44	0.44	0.01	0.24	0.24
Sat Flow, veh/h	611	1001	1569	1289	1500	306	1774	1863	1583	1774	1863	1583
Grp Volume(v), veh/h	103	0	44	103	0	65	277	288	60	11	152	8
Grp Sat Flow(s),veh/h/ln	1612	0	1569	1289	0	1806	1774	1863	1583	1774	1863	1583
Q Serve(g_s), s	0.4	0.0	1.0	3.2	0.0	1.3	6.1	4.3	0.9	0.3	2.8	0.2
Cycle Q Clear(g_c), s	2.1	0.0	1.0	5.3	0.0	1.3	6.1	4.3	0.9	0.3	2.8	0.2
Prop In Lane	0.52		1.00	1.00		0.17	1.00		1.00	1.00		1.00
Lane Grp Cap(c), veh/h	405	0	265	326	0	305	364	814	692	15	448	381
V/C Ratio(X)	0.25	0.00	0.17	0.32	0.00	0.21	0.76	0.35	0.09	0.72	0.34	0.02
Avail Cap(c_a), veh/h	1031	0	907	853	0	1043	1281	3543	3011	641	2870	2440
HCM Platoon Ratio	1.00	1.00	1.00	1.00	1.00	1.00	1.00	1.00	1.00	1.00	1.00	1.00
Upstream Filter(I)	1.00	0.00	1.00	1.00	0.00	1.00	1.00	1.00	1.00	1.00	1.00	1.00
Uniform Delay (d), s/veh	15.2	0.0	14.8	17.5	0.0	14.9	15.6	7.8	6.8	20.5	13.0	12.0
Incr Delay (d2), s/veh	0.3	0.0	0.3	0.5	0.0	0.3	3.3	0.6	0.1	47.6	0.9	0.0
Initial Q Delay(d3),s/veh	0.0	0.0	0.0	0.0	0.0	0.0	0.0	0.0	0.0	0.0	0.0	0.0
%ile BackOfQ(50%),veh/ln	1.1	0.0	0.4	1.2	0.0	0.7	3.3	2.3	0.4	0.3	1.6	0.1
LnGrp Delay(d),s/veh	15.5	0.0	15.0	18.1	0.0	15.2	18.9	8.3	7.0	68.1	14.0	12.1
LnGrp LOS	B		B	B		B	B	A	A	E	B	B
Approach Vol, veh/h		147			168			625			171	
Approach Delay, s/veh		15.4			17.0			12.9			17.4	
Approach LOS		B			B			B			B	

Timer	1	2	3	4	5	6	7	8
Assigned Phs	1	2		4	5	6		8
Phs Duration (G+Y+Rc), s	5.4	24.2		12.0	13.5	16.0		12.0
Change Period (Y+Rc), s	5.0	6.0		5.0	5.0	6.0		5.0
Max Green Setting (Gmax), s	15.0	79.0		24.0	30.0	64.0		24.0
Max Q Clear Time (g_c+I1), s	2.3	6.3		4.1	8.1	4.8		7.3
Green Ext Time (p_c), s	0.0	4.3		0.6	0.8	1.9		0.6

Intersection Summary	
HCM 2010 Ctrl Delay	14.5
HCM 2010 LOS	B

Movement	EBL	EBT	EBR	WBL	WBT	WBR	NBL	NBT	NBR	SBL	SBT	SBR
Lane Configurations												
Traffic Volume (veh/h)	60	5	190	95	20	15	160	600	20	10	540	65
Future Volume (veh/h)	60	5	190	95	20	15	160	600	20	10	540	65
Number	7	4	14	3	8	18	5	2	12	1	6	16
Initial Q (Qb), veh	0	0	0	0	0	0	0	0	0	0	0	0
Ped-Bike Adj(A_pbT)	0.98		0.98	0.98		0.98	1.00		1.00	1.00		0.99
Parking Bus, Adj	1.00	1.00	1.00	1.00	1.00	1.00	1.00	1.00	1.00	1.00	1.00	1.00
Adj Sat Flow, veh/h/ln	1900	1863	1863	1863	1863	1900	1863	1863	1863	1863	1863	1863
Adj Flow Rate, veh/h	65	5	21	103	22	2	174	652	0	11	587	29
Adj No. of Lanes	0	1	1	1	1	0	1	1	1	1	1	1
Peak Hour Factor	0.92	0.92	0.92	0.92	0.92	0.92	0.92	0.92	0.92	0.92	0.92	0.92
Percent Heavy Veh, %	2	2	2	2	2	2	2	2	2	2	2	2
Cap, veh/h	375	24	311	341	338	31	405	907	771	315	745	628
Arrive On Green	0.20	0.20	0.20	0.20	0.20	0.20	0.10	0.49	0.00	0.01	0.40	0.40
Sat Flow, veh/h	1210	120	1544	1350	1679	153	1774	1863	1583	1774	1863	1571
Grp Volume(v), veh/h	70	0	21	103	0	24	174	652	0	11	587	29
Grp Sat Flow(s),veh/h/ln	1330	0	1544	1350	0	1831	1774	1863	1583	1774	1863	1571
Q Serve(g_s), s	2.1	0.0	0.6	3.7	0.0	0.6	2.7	14.6	0.0	0.2	14.6	0.6
Cycle Q Clear(g_c), s	2.6	0.0	0.6	6.3	0.0	0.6	2.7	14.6	0.0	0.2	14.6	0.6
Prop In Lane	0.93		1.00	1.00		0.08	1.00		1.00	1.00		1.00
Lane Grp Cap(c), veh/h	400	0	311	341	0	369	405	907	771	315	745	628
V/C Ratio(X)	0.18	0.00	0.07	0.30	0.00	0.07	0.43	0.72	0.00	0.03	0.79	0.05
Avail Cap(c_a), veh/h	775	0	732	709	0	868	740	1801	1531	804	1801	1519
HCM Platoon Ratio	1.00	1.00	1.00	1.00	1.00	1.00	1.00	1.00	1.00	1.00	1.00	1.00
Upstream Filter(I)	1.00	0.00	1.00	1.00	0.00	1.00	1.00	1.00	0.00	1.00	1.00	1.00
Uniform Delay (d), s/veh	18.0	0.0	17.1	20.6	0.0	17.0	9.7	10.7	0.0	10.3	13.9	9.7
Incr Delay (d2), s/veh	0.2	0.0	0.1	0.5	0.0	0.1	0.7	1.1	0.0	0.0	1.9	0.0
Initial Q Delay(d3),s/veh	0.0	0.0	0.0	0.0	0.0	0.0	0.0	0.0	0.0	0.0	0.0	0.0
%ile BackOfQ(50%),veh/ln	0.9	0.0	0.3	1.4	0.0	0.3	1.4	7.7	0.0	0.1	7.7	0.3
LnGrp Delay(d),s/veh	18.2	0.0	17.1	21.0	0.0	17.1	10.5	11.8	0.0	10.3	15.8	9.7
LnGrp LOS	B		B	C		B	B	B		B	B	A
Approach Vol, veh/h		91			127			826			627	
Approach Delay, s/veh		18.0			20.3			11.5			15.4	
Approach LOS		B			C			B			B	

Timer	1	2	3	4	5	6	7	8
Assigned Phs	1	2		4	5	6		8
Phs Duration (G+Y+Rc), s	5.4	31.7		15.6	10.0	27.1		15.6
Change Period (Y+Rc), s	5.0	6.0		5.0	5.0	6.0		5.0
Max Green Setting (Gmax), s	15.0	51.0		25.0	15.0	51.0		25.0
Max Q Clear Time (g_c+I1), s	2.2	16.6		4.6	4.7	16.6		8.3
Green Ext Time (p_c), s	0.0	4.9		0.4	0.3	4.3		0.3

Intersection Summary	
HCM 2010 Ctrl Delay	14.0
HCM 2010 LOS	B

Notes

Movement	EBL	EBT	EBR	WBL	WBT	WBR	NBL	NBT	NBR	SBL	SBT	SBR
Lane Configurations												
Traffic Volume (veh/h)	45	20	125	110	45	75	60	650	60	45	720	30
Future Volume (veh/h)	45	20	125	110	45	75	60	650	60	45	720	30
Number	7	4	14	3	8	18	5	2	12	1	6	16
Initial Q (Qb), veh	0	0	0	0	0	0	0	0	0	0	0	0
Ped-Bike Adj(A_pbT)	1.00		0.98	1.00		0.99	1.00		1.00	1.00		1.00
Parking Bus, Adj	1.00	1.00	1.00	1.00	1.00	1.00	1.00	1.00	1.00	1.00	1.00	1.00
Adj Sat Flow, veh/h/ln	1863	1863	1900	1863	1863	1863	1863	1863	1863	1863	1863	1863
Adj Flow Rate, veh/h	49	22	7	120	49	9	65	707	30	49	783	16
Adj No. of Lanes	1	1	0	1	1	1	1	1	1	1	1	1
Peak Hour Factor	0.92	0.92	0.92	0.92	0.92	0.92	0.92	0.92	0.92	0.92	0.92	0.92
Percent Heavy Veh, %	2	2	2	2	2	2	2	2	2	2	2	2
Cap, veh/h	63	176	56	155	340	287	85	922	783	63	898	764
Arrive On Green	0.04	0.13	0.13	0.09	0.18	0.18	0.05	0.49	0.49	0.04	0.48	0.48
Sat Flow, veh/h	1774	1350	429	1774	1863	1573	1774	1863	1583	1774	1863	1583
Grp Volume(v), veh/h	49	0	29	120	49	9	65	707	30	49	783	16
Grp Sat Flow(s),veh/h/ln	1774	0	1779	1774	1863	1573	1774	1863	1583	1774	1863	1583
Q Serve(g_s), s	2.2	0.0	1.1	5.2	1.8	0.4	2.9	24.5	0.8	2.2	29.8	0.4
Cycle Q Clear(g_c), s	2.2	0.0	1.1	5.2	1.8	0.4	2.9	24.5	0.8	2.2	29.8	0.4
Prop In Lane	1.00		0.24	1.00		1.00	1.00		1.00	1.00		1.00
Lane Grp Cap(c), veh/h	63	0	231	155	340	287	85	922	783	63	898	764
V/C Ratio(X)	0.78	0.00	0.13	0.77	0.14	0.03	0.76	0.77	0.04	0.78	0.87	0.02
Avail Cap(c_a), veh/h	448	0	471	448	493	417	559	1527	1298	559	1527	1298
HCM Platoon Ratio	1.00	1.00	1.00	1.00	1.00	1.00	1.00	1.00	1.00	1.00	1.00	1.00
Upstream Filter(I)	1.00	0.00	1.00	1.00	1.00	1.00	1.00	1.00	1.00	1.00	1.00	1.00
Uniform Delay (d), s/veh	37.9	0.0	30.5	35.4	27.2	26.7	37.3	16.3	10.3	37.9	18.3	10.7
Incr Delay (d2), s/veh	18.7	0.0	0.2	7.9	0.2	0.0	13.2	1.4	0.0	18.5	3.1	0.0
Initial Q Delay(d3),s/veh	0.0	0.0	0.0	0.0	0.0	0.0	0.0	0.0	0.0	0.0	0.0	0.0
%ile BackOfQ(50%),veh/ln	1.4	0.0	0.6	2.9	0.9	0.2	1.7	12.9	0.3	1.4	16.0	0.2
LnGrp Delay(d),s/veh	56.6	0.0	30.7	43.3	27.4	26.7	50.5	17.7	10.3	56.4	21.4	10.7
LnGrp LOS	E		C	D	C	C	D	B	B	E	C	B
Approach Vol, veh/h		78			178			802			848	
Approach Delay, s/veh		47.0			38.1			20.1			23.2	
Approach LOS		D			D			C			C	

Timer	1	2	3	4	5	6	7	8
Assigned Phs	1	2	3	4	5	6	7	8
Phs Duration (G+Y+Rc), s	7.8	44.2	11.9	15.3	8.8	43.2	7.8	19.5
Change Period (Y+Rc), s	5.0	5.0	5.0	5.0	5.0	5.0	5.0	5.0
Max Green Setting (Gmax), s	25.0	65.0	20.0	21.0	25.0	65.0	20.0	21.0
Max Q Clear Time (g_c+I1), s	4.2	26.5	7.2	3.1	4.9	31.8	4.2	3.8
Green Ext Time (p_c), s	0.1	5.7	0.2	0.1	0.1	6.5	0.1	0.2

Intersection Summary	
HCM 2010 Ctrl Delay	24.3
HCM 2010 LOS	C

Movement	EBL	EBT	EBR	WBL	WBT	WBR	NBL	NBT	NBR	SBL	SBT	SBR
Lane Configurations												
Traffic Volume (veh/h)	35	10	480	20	5	0	315	755	45	10	960	15
Future Volume (veh/h)	35	10	480	20	5	0	315	755	45	10	960	15
Number	3	8	18	7	4	14	1	6	16	5	2	12
Initial Q (Qb), veh	0	0	0	0	0	0	0	0	0	0	0	0
Ped-Bike Adj(A_pbT)	0.99		1.00	0.99		1.00	1.00		1.00	1.00		1.00
Parking Bus, Adj	1.00	1.00	1.00	1.00	1.00	1.00	1.00	1.00	1.00	1.00	1.00	1.00
Adj Sat Flow, veh/h/ln	1900	1863	1863	1900	1863	1900	1863	1863	1900	1863	1863	1863
Adj Flow Rate, veh/h	38	11	0	22	5	0	342	821	48	11	1043	7
Adj No. of Lanes	0	1	1	0	1	0	1	2	0	1	2	1
Peak Hour Factor	0.92	0.92	0.92	0.92	0.92	0.92	0.92	0.92	0.92	0.92	0.92	0.92
Percent Heavy Veh, %	2	2	2	2	2	2	2	2	2	2	2	2
Cap, veh/h	177	29	110	182	29	0	403	2340	137	15	1663	744
Arrive On Green	0.09	0.07	0.00	0.09	0.07	0.00	0.23	0.69	0.69	0.01	0.47	0.47
Sat Flow, veh/h	1111	422	1583	1156	416	0	1774	3399	199	1774	3539	1583
Grp Volume(v), veh/h	49	0	0	27	0	0	342	427	442	11	1043	7
Grp Sat Flow(s),veh/h/ln	1533	0	1583	1572	0	0	1774	1770	1828	1774	1770	1583
Q Serve(g_s), s	0.9	0.0	0.0	0.0	0.0	0.0	11.9	6.4	6.4	0.4	14.2	0.2
Cycle Q Clear(g_c), s	1.8	0.0	0.0	0.9	0.0	0.0	11.9	6.4	6.4	0.4	14.2	0.2
Prop In Lane	0.78		1.00	0.81		0.00	1.00		0.11	1.00		1.00
Lane Grp Cap(c), veh/h	230	0	110	236	0	0	403	1219	1259	15	1663	744
V/C Ratio(X)	0.21	0.00	0.00	0.11	0.00	0.00	0.85	0.35	0.35	0.74	0.63	0.01
Avail Cap(c_a), veh/h	818	0	739	747	0	0	1960	1570	1621	1960	3140	1405
HCM Platoon Ratio	1.00	1.00	1.00	1.00	1.00	1.00	1.00	1.00	1.00	1.00	1.00	1.00
Upstream Filter(I)	1.00	0.00	0.00	1.00	0.00	0.00	1.00	1.00	1.00	1.00	1.00	1.00
Uniform Delay (d), s/veh	28.2	0.0	0.0	27.8	0.0	0.0	23.8	4.1	4.1	31.8	12.8	9.1
Incr Delay (d2), s/veh	0.5	0.0	0.0	0.2	0.0	0.0	2.0	0.4	0.4	23.7	0.8	0.0
Initial Q Delay(d3),s/veh	0.0	0.0	0.0	0.0	0.0	0.0	0.0	0.0	0.0	0.0	0.0	0.0
%ile BackOfQ(50%),veh/ln	0.8	0.0	0.0	0.5	0.0	0.0	6.0	3.2	3.3	0.3	7.0	0.1
LnGrp Delay(d),s/veh	28.7	0.0	0.0	28.0	0.0	0.0	25.7	4.5	4.5	55.5	13.6	9.1
LnGrp LOS	C			C			C	A	A	E	B	A
Approach Vol, veh/h		49			27			1211			1061	
Approach Delay, s/veh		28.7			28.0			10.5			14.0	
Approach LOS		C			C			B			B	

Timer	1	2	3	4	5	6	7	8
Assigned Phs	1	2		4	5	6		8
Phs Duration (G+Y+Rc), s	18.6	36.2		9.5	4.5	50.2		9.5
Change Period (Y+Rc), s	4.0	6.0		5.0	4.0	6.0		5.0
Max Green Setting (Gmax), s	71.0	57.0		27.0	71.0	57.0		30.0
Max Q Clear Time (g_c+I1), s	13.9	16.2		2.9	2.4	8.4		3.8
Green Ext Time (p_c), s	0.8	13.9		0.1	0.0	10.2		0.1

Intersection Summary	
HCM 2010 Ctrl Delay	12.7
HCM 2010 LOS	B

Movement	EBL	EBT	EBR	WBL	WBT	WBR	NBL	NBT	NBR	SBL	SBT	SBR
Lane Configurations												
Traffic Volume (veh/h)	35	0	70	10	5	10	135	1165	20	20	1425	70
Future Volume (veh/h)	35	0	70	10	5	10	135	1165	20	20	1425	70
Number	3	8	18	7	4	14	1	6	16	5	2	12
Initial Q (Qb), veh	0	0	0	0	0	0	0	0	0	0	0	0
Ped-Bike Adj(A_pbT)	1.00		1.00	1.00		1.00	1.00		1.00	1.00		1.00
Parking Bus, Adj	1.00	1.00	1.00	1.00	1.00	1.00	1.00	1.00	1.00	1.00	1.00	1.00
Adj Sat Flow, veh/h/ln	1900	1863	1863	1900	1863	1900	1863	1863	1900	1863	1863	1863
Adj Flow Rate, veh/h	38	0	1	11	5	1	147	1266	21	22	1549	48
Adj No. of Lanes	0	1	1	0	1	0	1	2	0	1	2	1
Peak Hour Factor	0.92	0.92	0.92	0.92	0.92	0.92	0.92	0.92	0.92	0.92	0.92	0.92
Percent Heavy Veh, %	2	2	2	2	2	2	2	2	2	2	2	2
Cap, veh/h	166	0	72	107	21	3	184	2692	45	26	2359	1055
Arrive On Green	0.06	0.00	0.05	0.06	0.05	0.05	0.10	0.76	0.76	0.01	0.67	0.67
Sat Flow, veh/h	1556	0	1583	643	471	70	1774	3563	59	1774	3539	1583
Grp Volume(v), veh/h	38	0	1	17	0	0	147	629	658	22	1549	48
Grp Sat Flow(s),veh/h/ln	1556	0	1583	1183	0	0	1774	1770	1852	1774	1770	1583
Q Serve(g_s), s	0.0	0.0	0.0	0.3	0.0	0.0	6.2	10.2	10.2	0.9	19.7	0.8
Cycle Q Clear(g_c), s	1.6	0.0	0.0	1.8	0.0	0.0	6.2	10.2	10.2	0.9	19.7	0.8
Prop In Lane	1.00		1.00	0.65		0.06	1.00		0.03	1.00		1.00
Lane Grp Cap(c), veh/h	186	0	72	148	0	0	184	1337	1399	26	2359	1055
V/C Ratio(X)	0.20	0.00	0.01	0.12	0.00	0.00	0.80	0.47	0.47	0.85	0.66	0.05
Avail Cap(c_a), veh/h	547	0	479	541	0	0	490	2002	2096	257	3539	1583
HCM Platoon Ratio	1.00	1.00	1.00	1.00	1.00	1.00	1.00	1.00	1.00	1.00	1.00	1.00
Upstream Filter(I)	1.00	0.00	1.00	1.00	0.00	0.00	1.00	1.00	1.00	1.00	1.00	1.00
Uniform Delay (d), s/veh	34.9	0.0	34.6	35.0	0.0	0.0	33.3	3.5	3.5	37.4	7.5	4.4
Incr Delay (d2), s/veh	0.2	0.0	0.0	0.1	0.0	0.0	3.0	0.6	0.5	22.8	0.7	0.0
Initial Q Delay(d3),s/veh	0.0	0.0	0.0	0.0	0.0	0.0	0.0	0.0	0.0	0.0	0.0	0.0
%ile BackOfQ(50%),veh/ln	0.8	0.0	0.0	0.3	0.0	0.0	3.2	5.1	5.3	0.6	9.7	0.4
LnGrp Delay(d),s/veh	35.1	0.0	34.7	35.1	0.0	0.0	36.3	4.1	4.1	60.2	8.2	4.4
LnGrp LOS	D		C	D			D	A	A	E	A	A
Approach Vol, veh/h		39			17			1434			1619	
Approach Delay, s/veh		35.1			35.1			7.4			8.8	
Approach LOS		D			D			A			A	

Timer	1	2	3	4	5	6	7	8
Assigned Phs	1	2		4	5	6		8
Phs Duration (G+Y+Rc), s	11.9	55.7		8.5	5.1	62.4		8.5
Change Period (Y+Rc), s	4.0	5.0		5.0	4.0	5.0		5.0
Max Green Setting (Gmax), s	21.0	76.0		23.0	11.0	86.0		23.0
Max Q Clear Time (g_c+I1), s	3.6	21.7		3.8	2.9	12.2		3.6
Green Ext Time (p_c), s	0.1	28.9		0.0	0.0	20.9		0.0

Intersection Summary	
HCM 2010 Ctrl Delay	8.6
HCM 2010 LOS	A

Movement	EBL	EBT	EBR	WBL	WBT	WBR	NBL	NBT	NBR	SBL	SBT	SBR
Lane Configurations												
Traffic Volume (veh/h)	60	5	35	40	15	50	110	1300	60	30	1365	50
Future Volume (veh/h)	60	5	35	40	15	50	110	1300	60	30	1365	50
Number	3	8	18	7	4	14	1	6	16	5	2	12
Initial Q (Qb), veh	0	0	0	0	0	0	0	0	0	0	0	0
Ped-Bike Adj(A_pbT)	1.00		1.00	1.00		1.00	1.00		1.00	1.00		1.00
Parking Bus, Adj	1.00	1.00	1.00	1.00	1.00	1.00	1.00	1.00	1.00	1.00	1.00	1.00
Adj Sat Flow, veh/h/ln	1900	1863	1863	1863	1863	1900	1863	1863	1863	1863	1863	1863
Adj Flow Rate, veh/h	65	5	1	43	16	1	120	1413	48	33	1484	39
Adj No. of Lanes	0	1	1	1	1	0	1	2	1	1	2	1
Peak Hour Factor	0.92	0.92	0.92	0.92	0.92	0.92	0.92	0.92	0.92	0.92	0.92	0.92
Percent Heavy Veh, %	2	2	2	2	2	2	2	2	2	2	2	2
Cap, veh/h	165	11	158	111	174	11	142	2756	1233	43	2560	1145
Arrive On Green	0.10	0.10	0.10	0.10	0.10	0.10	0.08	0.78	0.78	0.02	0.72	0.72
Sat Flow, veh/h	1202	111	1579	1401	1735	108	1774	3539	1583	1774	3539	1583
Grp Volume(v), veh/h	70	0	1	43	0	17	120	1413	48	33	1484	39
Grp Sat Flow(s),veh/h/ln	1313	0	1579	1401	0	1843	1774	1770	1583	1774	1770	1583
Q Serve(g_s), s	7.1	0.0	0.1	4.7	0.0	1.3	10.3	22.8	1.1	2.9	31.0	1.1
Cycle Q Clear(g_c), s	8.4	0.0	0.1	13.1	0.0	1.3	10.3	22.8	1.1	2.9	31.0	1.1
Prop In Lane	0.93		1.00	1.00		0.06	1.00		1.00	1.00		1.00
Lane Grp Cap(c), veh/h	176	0	158	111	0	184	142	2756	1233	43	2560	1145
V/C Ratio(X)	0.40	0.00	0.01	0.39	0.00	0.09	0.85	0.51	0.04	0.76	0.58	0.03
Avail Cap(c_a), veh/h	254	0	244	187	0	285	240	2756	1233	240	2560	1145
HCM Platoon Ratio	1.00	1.00	1.00	1.00	1.00	1.00	1.00	1.00	1.00	1.00	1.00	1.00
Upstream Filter(I)	1.00	0.00	1.00	1.00	0.00	1.00	0.71	0.71	0.71	1.00	1.00	1.00
Uniform Delay (d), s/veh	67.0	0.0	62.8	72.8	0.0	63.4	70.4	6.3	3.9	75.2	10.2	6.1
Incr Delay (d2), s/veh	1.4	0.0	0.0	2.2	0.0	0.2	3.8	0.5	0.0	9.7	1.0	0.1
Initial Q Delay(d3),s/veh	0.0	0.0	0.0	0.0	0.0	0.0	0.0	0.0	0.0	0.0	0.0	0.0
%ile BackOfQ(50%),veh/ln	2.9	0.0	0.0	1.9	0.0	0.7	5.2	11.2	0.5	1.5	15.4	0.5
LnGrp Delay(d),s/veh	68.5	0.0	62.8	75.0	0.0	63.6	74.1	6.8	4.0	84.8	11.2	6.1
LnGrp LOS	E		E	E		E	E	A	A	F	B	A
Approach Vol, veh/h		71			60			1581			1556	
Approach Delay, s/veh		68.4			71.8			11.8			12.6	
Approach LOS		E			E			B			B	

Timer	1	2	3	4	5	6	7	8
Assigned Phs	1	2		4	5	6		8
Phs Duration (G+Y+Rc), s	16.4	118.1		20.5	7.8	126.7		20.5
Change Period (Y+Rc), s	4.0	6.0		5.0	4.0	6.0		5.0
Max Green Setting (Gmax), s	21.0	95.0		24.0	21.0	95.0		24.0
Max Q Clear Time (g_c+I1), s	12.3	33.0		15.1	4.9	24.8		10.4
Green Ext Time (p_c), s	0.1	28.6		0.1	0.0	27.7		0.1

Intersection Summary	
HCM 2010 Ctrl Delay	14.5
HCM 2010 LOS	B

Movement	EBL	EBT	EBR	WBL	WBT	WBR	NBL	NBT	NBR	SBL	SBT	SBR
Lane Configurations												
Traffic Volume (veh/h)	140	10	220	10	10	10	425	1375	15	85	1300	105
Future Volume (veh/h)	140	10	220	10	10	10	425	1375	15	85	1300	105
Number	3	8	18	7	4	14	1	6	16	5	2	12
Initial Q (Qb), veh	0	0	0	0	0	0	0	0	0	0	0	0
Ped-Bike Adj(A_pbT)	1.00		0.97	1.00		0.98	1.00		1.00	1.00		1.00
Parking Bus, Adj	1.00	1.00	1.00	1.00	1.00	1.00	1.00	1.00	1.00	1.00	1.00	1.00
Adj Sat Flow, veh/h/ln	1863	1863	1863	1900	1863	1900	1863	1863	1900	1863	1863	1863
Adj Flow Rate, veh/h	160	0	61	11	11	3	462	1495	16	92	1413	86
Adj No. of Lanes	2	0	2	0	1	0	2	2	0	1	2	1
Peak Hour Factor	0.92	0.92	0.92	0.92	0.92	0.92	0.92	0.92	0.92	0.92	0.92	0.92
Percent Heavy Veh, %	2	2	2	2	2	2	2	2	2	2	2	2
Cap, veh/h	325	0	805	59	59	16	598	2186	23	151	1842	953
Arrive On Green	0.09	0.00	0.08	0.08	0.08	0.05	0.17	0.61	0.59	0.09	0.52	0.52
Sat Flow, veh/h	3548	0	3071	783	783	214	3442	3587	38	1774	3539	1578
Grp Volume(v), veh/h	160	0	61	25	0	0	462	737	774	92	1413	86
Grp Sat Flow(s),veh/h/ln	1774	0	1536	1780	0	0	1721	1770	1856	1774	1770	1578
Q Serve(g_s), s	5.0	0.0	1.7	1.5	0.0	0.0	14.8	32.3	32.3	5.8	36.9	2.6
Cycle Q Clear(g_c), s	5.0	0.0	1.7	1.5	0.0	0.0	14.8	32.3	32.3	5.8	36.9	2.6
Prop In Lane	1.00		1.00	0.44		0.12	1.00		0.02	1.00		1.00
Lane Grp Cap(c), veh/h	325	0	805	135	0	0	598	1078	1131	151	1842	953
V/C Ratio(X)	0.49	0.00	0.08	0.19	0.00	0.00	0.77	0.68	0.68	0.61	0.77	0.09
Avail Cap(c_a), veh/h	1043	0	1427	477	0	0	1726	2968	3113	230	4621	2191
HCM Platoon Ratio	1.00	1.00	1.00	1.00	1.00	1.00	1.00	1.00	1.00	1.00	1.00	1.00
Upstream Filter(I)	1.00	0.00	1.00	1.00	0.00	0.00	1.00	1.00	1.00	1.00	1.00	1.00
Uniform Delay (d), s/veh	50.0	0.0	32.6	50.3	0.0	0.0	45.6	15.1	15.2	51.0	22.1	9.6
Incr Delay (d2), s/veh	0.4	0.0	0.0	0.7	0.0	0.0	0.8	1.1	1.1	1.5	1.0	0.1
Initial Q Delay(d3),s/veh	0.0	0.0	0.0	0.0	0.0	0.0	0.0	0.0	0.0	0.0	0.0	0.0
%ile BackOfQ(50%),veh/ln	2.5	0.0	0.7	0.8	0.0	0.0	7.1	15.9	16.7	2.9	18.1	1.4
LnGrp Delay(d),s/veh	50.4	0.0	32.6	50.9	0.0	0.0	46.4	16.2	16.2	52.5	23.1	9.7
LnGrp LOS	D		C	D			D	B	B	D	C	A
Approach Vol, veh/h		221			25			1973			1591	
Approach Delay, s/veh		45.5			50.9			23.3			24.1	
Approach LOS		D			D			C			C	

Timer	1	2	3	4	5	6	7	8
Assigned Phs	1	2		4	5	6		8
Phs Duration (G+Y+Rc), s	24.1	64.2		12.8	13.8	74.5		14.6
Change Period (Y+Rc), s	6.0	6.0		7.0	6.0	6.0		7.0
Max Green Setting (Gmax), s	56.0	149.0		28.0	13.0	192.0		31.0
Max Q Clear Time (g_c+I1), s	16.8	38.9		3.5	7.8	34.3		7.0
Green Ext Time (p_c), s	1.3	19.4		0.0	0.1	18.4		0.6

Intersection Summary	
HCM 2010 Ctrl Delay	25.1
HCM 2010 LOS	C

Notes

Movement	EBL	EBT	EBR	WBL	WBT	WBR	NBL	NBT	NBR	SBL	SBT	SBR
Lane Configurations												
Traffic Volume (veh/h)	5	5	5	60	0	45	5	1810	90	30	1495	5
Future Volume (veh/h)	5	5	5	60	0	45	5	1810	90	30	1495	5
Number	3	8	18	7	4	14	1	6	16	5	2	12
Initial Q (Qb), veh	0	0	0	0	0	0	0	0	0	0	0	0
Ped-Bike Adj(A_pbT)	0.98		0.97	0.98		0.97	1.00		1.00	1.00		1.00
Parking Bus, Adj	1.00	1.00	1.00	1.00	1.00	1.00	1.00	1.00	1.00	1.00	1.00	1.00
Adj Sat Flow, veh/h/ln	1900	1863	1900	1863	1863	1900	1863	1863	1900	1863	1863	1900
Adj Flow Rate, veh/h	5	5	1	65	0	1	5	1967	96	33	1625	5
Adj No. of Lanes	0	1	0	1	1	0	1	2	0	1	2	0
Peak Hour Factor	0.92	0.92	0.92	0.92	0.92	0.92	0.92	0.92	0.92	0.92	0.92	0.92
Percent Heavy Veh, %	2	2	2	2	2	2	2	2	2	2	2	2
Cap, veh/h	90	80	13	176	0	138	11	2711	131	63	2962	9
Arrive On Green	0.09	0.09	0.08	0.09	0.00	0.08	0.01	0.79	0.78	0.04	0.82	0.81
Sat Flow, veh/h	584	895	148	1372	0	1543	1774	3436	166	1774	3619	11
Grp Volume(v), veh/h	11	0	0	65	0	1	5	1005	1058	33	794	836
Grp Sat Flow(s),veh/h/ln	1627	0	0	1372	0	1543	1774	1770	1833	1774	1770	1861
Q Serve(g_s), s	0.0	0.0	0.0	5.4	0.0	0.1	0.4	38.8	40.4	2.6	20.7	20.7
Cycle Q Clear(g_c), s	0.8	0.0	0.0	6.1	0.0	0.1	0.4	38.8	40.4	2.6	20.7	20.7
Prop In Lane	0.45		0.09	1.00		1.00	1.00		0.09	1.00		0.01
Lane Grp Cap(c), veh/h	183	0	0	176	0	138	11	1396	1446	63	1448	1523
V/C Ratio(X)	0.06	0.00	0.00	0.37	0.00	0.01	0.45	0.72	0.73	0.52	0.55	0.55
Avail Cap(c_a), veh/h	312	0	0	289	0	265	101	1396	1446	101	1448	1523
HCM Platoon Ratio	1.00	1.00	1.00	1.00	1.00	1.00	1.00	1.00	1.00	1.00	1.00	1.00
Upstream Filter(I)	1.00	0.00	0.00	1.00	0.00	1.00	0.61	0.61	0.61	1.00	1.00	1.00
Uniform Delay (d), s/veh	58.4	0.0	0.0	60.7	0.0	58.5	69.3	7.2	7.4	66.3	4.2	4.2
Incr Delay (d2), s/veh	0.1	0.0	0.0	1.3	0.0	0.0	6.2	2.0	2.0	2.5	1.5	1.4
Initial Q Delay(d3),s/veh	0.0	0.0	0.0	0.0	0.0	0.0	0.0	0.0	0.0	0.0	0.0	0.0
%ile BackOfQ(50%),veh/ln	0.4	0.0	0.0	2.5	0.0	0.0	0.2	19.5	20.8	1.3	10.5	11.1
LnGrp Delay(d),s/veh	58.6	0.0	0.0	62.0	0.0	58.6	75.5	9.2	9.4	68.8	5.7	5.6
LnGrp LOS	E			E		E	E	A	A	E	A	A
Approach Vol, veh/h		11			66			2068			1663	
Approach Delay, s/veh		58.6			62.0			9.5			6.9	
Approach LOS		E			E			A			A	

Timer	1	2	3	4	5	6	7	8
Assigned Phs	1	2		4	5	6		8
Phs Duration (G+Y+Rc), s	4.9	118.6		16.5	9.0	114.5		16.5
Change Period (Y+Rc), s	4.0	5.0		5.0	4.0	5.0		5.0
Max Green Setting (Gmax), s	8.0	95.0		23.0	8.0	95.0		23.0
Max Q Clear Time (g_c+I1), s	2.4	22.7		8.1	4.6	42.4		2.8
Green Ext Time (p_c), s	0.0	33.6		0.1	0.0	41.2		0.0

Intersection Summary	
HCM 2010 Ctrl Delay	9.4
HCM 2010 LOS	A

Movement	EBL	EBT	EBR	WBL	WBT	WBR	NBL	NBT	NBR	SBL	SBT	SBR
Lane Configurations												
Traffic Volume (veh/h)	95	5	5	105	15	15	5	1785	20	10	1325	200
Future Volume (veh/h)	95	5	5	105	15	15	5	1785	20	10	1325	200
Number	3	8	18	7	4	14	1	6	16	5	2	12
Initial Q (Qb), veh	0	0	0	0	0	0	0	0	0	0	0	0
Ped-Bike Adj(A_pbT)	1.00		1.00	1.00		1.00	1.00		1.00	1.00		1.00
Parking Bus, Adj	1.00	1.00	1.00	1.00	1.00	1.00	1.00	1.00	1.00	1.00	1.00	1.00
Adj Sat Flow, veh/h/ln	1900	1863	1900	1900	1863	1900	1863	1863	1900	1863	1863	1863
Adj Flow Rate, veh/h	103	5	3	114	16	12	5	1940	21	11	1440	157
Adj No. of Lanes	0	1	0	0	1	0	1	2	0	1	2	1
Peak Hour Factor	0.92	0.92	0.92	0.92	0.92	0.92	0.92	0.92	0.92	0.92	0.92	0.92
Percent Heavy Veh, %	2	2	2	2	2	2	2	2	2	2	2	2
Cap, veh/h	210	7	4	198	20	15	7	2809	30	14	2785	1246
Arrive On Green	0.11	0.11	0.10	0.11	0.11	0.10	0.00	0.78	0.77	0.01	0.79	0.79
Sat Flow, veh/h	1391	68	41	1323	186	139	1774	3587	39	1774	3539	1583
Grp Volume(v), veh/h	111	0	0	142	0	0	5	955	1006	11	1440	157
Grp Sat Flow(s),veh/h/ln	1499	0	0	1647	0	0	1774	1770	1856	1774	1770	1583
Q Serve(g_s), s	0.0	0.0	0.0	1.3	0.0	0.0	0.3	30.5	30.8	0.7	17.5	2.8
Cycle Q Clear(g_c), s	8.3	0.0	0.0	9.6	0.0	0.0	0.3	30.5	30.8	0.7	17.5	2.8
Prop In Lane	0.93		0.03	0.80		0.08	1.00		0.02	1.00		1.00
Lane Grp Cap(c), veh/h	221	0	0	234	0	0	7	1386	1454	14	2785	1246
V/C Ratio(X)	0.50	0.00	0.00	0.61	0.00	0.00	0.73	0.69	0.69	0.81	0.52	0.13
Avail Cap(c_a), veh/h	430	0	0	451	0	0	118	1386	1454	118	2785	1246
HCM Platoon Ratio	1.00	1.00	1.00	1.00	1.00	1.00	1.00	1.00	1.00	1.00	1.00	1.00
Upstream Filter(I)	1.00	0.00	0.00	1.00	0.00	0.00	0.61	0.61	0.61	0.83	0.83	0.83
Uniform Delay (d), s/veh	51.3	0.0	0.0	51.9	0.0	0.0	59.7	6.1	6.2	59.5	4.6	3.0
Incr Delay (d2), s/veh	1.8	0.0	0.0	2.5	0.0	0.0	28.8	1.7	1.7	27.9	0.6	0.2
Initial Q Delay(d3),s/veh	0.0	0.0	0.0	0.0	0.0	0.0	0.0	0.0	0.0	0.0	0.0	0.0
%ile BackOfQ(50%),veh/ln	3.7	0.0	0.0	4.7	0.0	0.0	0.2	15.3	16.0	0.5	8.6	1.3
LnGrp Delay(d),s/veh	53.1	0.0	0.0	54.4	0.0	0.0	88.5	7.9	7.8	87.3	5.2	3.2
LnGrp LOS	D			D			F	A	A	F	A	A
Approach Vol, veh/h		111			142			1966			1608	
Approach Delay, s/veh		53.1			54.4			8.1			5.5	
Approach LOS		D			D			A			A	

Timer	1	2	3	4	5	6	7	8
Assigned Phs	1	2		4	5	6		8
Phs Duration (G+Y+Rc), s	4.5	98.4		17.1	4.9	98.0		17.1
Change Period (Y+Rc), s	4.0	5.0		5.0	4.0	5.0		5.0
Max Green Setting (Gmax), s	8.0	68.0		30.0	8.0	68.0		30.0
Max Q Clear Time (g_c+I1), s	2.3	19.5		11.6	2.7	32.8		10.3
Green Ext Time (p_c), s	0.0	33.3		0.5	0.0	31.6		0.3

Intersection Summary	
HCM 2010 Ctrl Delay	10.0
HCM 2010 LOS	B

Movement	EBL	EBT	EBR	WBL	WBT	WBR	NBL	NBT	NBR	SBL	SBT	SBR
Lane Configurations												
Traffic Volume (veh/h)	150	30	20	145	25	35	25	1605	75	10	1360	75
Future Volume (veh/h)	150	30	20	145	25	35	25	1605	75	10	1360	75
Number	3	8	18	7	4	14	1	6	16	5	2	12
Initial Q (Qb), veh	0	0	0	0	0	0	0	0	0	0	0	0
Ped-Bike Adj(A_pbT)	0.99		0.98	0.99		0.98	1.00		1.00	1.00		1.00
Parking Bus, Adj	1.00	1.00	1.00	1.00	1.00	1.00	1.00	1.00	1.00	1.00	1.00	1.00
Adj Sat Flow, veh/h/ln	1900	1863	1863	1863	1863	1900	1863	1863	1900	1863	1863	1900
Adj Flow Rate, veh/h	163	33	2	158	27	5	27	1745	80	11	1478	79
Adj No. of Lanes	0	1	1	1	1	0	1	2	0	1	2	0
Peak Hour Factor	0.92	0.92	0.92	0.92	0.92	0.92	0.92	0.92	0.92	0.92	0.92	0.92
Percent Heavy Veh, %	2	2	2	2	2	2	2	2	2	2	2	2
Cap, veh/h	234	38	270	313	264	49	34	2529	115	13	2467	131
Arrive On Green	0.17	0.17	0.17	0.17	0.17	0.17	0.04	1.00	1.00	0.01	0.72	0.71
Sat Flow, veh/h	1077	218	1559	1359	1525	282	1774	3447	157	1774	3418	182
Grp Volume(v), veh/h	196	0	2	158	0	32	27	891	934	11	763	794
Grp Sat Flow(s),veh/h/ln	1295	0	1559	1359	0	1807	1774	1770	1835	1774	1770	1831
Q Serve(g_s), s	18.9	0.0	0.1	0.0	0.0	2.1	2.1	0.0	0.0	0.9	29.5	29.9
Cycle Q Clear(g_c), s	21.0	0.0	0.1	13.3	0.0	2.1	2.1	0.0	0.0	0.9	29.5	29.9
Prop In Lane	0.83		1.00	1.00		0.16	1.00		0.09	1.00		0.10
Lane Grp Cap(c), veh/h	272	0	270	313	0	313	34	1298	1346	13	1277	1321
V/C Ratio(X)	0.72	0.00	0.01	0.50	0.00	0.10	0.79	0.69	0.69	0.83	0.60	0.60
Avail Cap(c_a), veh/h	309	0	312	350	0	361	139	1298	1346	139	1277	1321
HCM Platoon Ratio	1.00	1.00	1.00	1.00	1.00	1.00	2.00	2.00	2.00	1.00	1.00	1.00
Upstream Filter(I)	1.00	0.00	1.00	1.00	0.00	1.00	0.42	0.42	0.42	0.83	0.83	0.83
Uniform Delay (d), s/veh	57.5	0.0	47.9	53.3	0.0	48.8	67.0	0.0	0.0	69.4	9.5	9.6
Incr Delay (d2), s/veh	6.9	0.0	0.0	1.3	0.0	0.1	6.5	1.3	1.3	31.5	1.7	1.7
Initial Q Delay(d3),s/veh	0.0	0.0	0.0	0.0	0.0	0.0	0.0	0.0	0.0	0.0	0.0	0.0
%ile BackOfQ(50%),veh/ln	7.9	0.0	0.1	5.7	0.0	1.1	1.1	0.5	0.5	0.5	14.8	15.6
LnGrp Delay(d),s/veh	64.5	0.0	47.9	54.6	0.0	48.9	73.5	1.3	1.3	100.9	11.2	11.3
LnGrp LOS	E		D	D		D	E	A	A	F	B	B
Approach Vol, veh/h		198			190			1852			1568	
Approach Delay, s/veh		64.3			53.6			2.3			11.9	
Approach LOS		E			D			A			B	

Timer	1	2	3	4	5	6	7	8
Assigned Phs	1	2		4	5	6		8
Phs Duration (G+Y+Rc), s	6.7	105.1		28.3	5.0	106.7		28.3
Change Period (Y+Rc), s	4.0	5.0		5.0	4.0	5.0		5.0
Max Green Setting (Gmax), s	11.0	88.0		27.0	11.0	88.0		27.0
Max Q Clear Time (g_c+I1), s	4.1	31.9		15.3	2.9	2.0		23.0
Green Ext Time (p_c), s	0.0	27.7		0.5	0.0	46.3		0.3

Intersection Summary	
HCM 2010 Ctrl Delay	12.0
HCM 2010 LOS	B

Movement	EBL	EBT	EBR	WBL	WBT	WBR	NBL	NBT	NBR	SBL	SBT	SBR
Lane Configurations												
Traffic Volume (veh/h)	15	110	35	95	75	740	25	895	120	550	915	20
Future Volume (veh/h)	15	110	35	95	75	740	25	895	120	550	915	20
Number	7	4	14	3	8	18	1	6	16	5	2	12
Initial Q (Qb), veh	0	0	0	0	0	0	0	0	0	0	0	0
Ped-Bike Adj(A_pbT)	0.99		0.99	0.99		0.99	1.00		0.99	1.00		1.00
Parking Bus, Adj	1.00	1.00	1.00	1.00	1.00	1.00	1.00	1.00	1.00	1.00	1.00	1.00
Adj Sat Flow, veh/h/ln	1900	1863	1863	1863	1863	1863	1863	1863	1863	1863	1863	1900
Adj Flow Rate, veh/h	16	120	5	103	82	476	27	973	51	598	995	21
Adj No. of Lanes	0	1	1	1	1	1	1	2	1	2	2	0
Peak Hour Factor	0.92	0.92	0.92	0.92	0.92	0.92	0.92	0.92	0.92	0.92	0.92	0.92
Percent Heavy Veh, %	2	2	2	2	2	2	2	2	2	2	2	2
Cap, veh/h	55	373	363	381	606	511	34	1416	630	650	2019	43
Arrive On Green	0.23	0.23	0.23	0.06	0.33	0.33	0.02	0.40	0.40	0.38	1.00	1.00
Sat Flow, veh/h	115	1609	1565	1774	1863	1570	1774	3539	1575	3442	3544	75
Grp Volume(v), veh/h	136	0	5	103	82	476	27	973	51	598	497	519
Grp Sat Flow(s),veh/h/ln	1724	0	1565	1774	1863	1570	1774	1770	1575	1721	1770	1849
Q Serve(g_s), s	0.0	0.0	0.3	5.9	4.3	41.1	2.1	31.9	2.8	23.2	0.0	0.0
Cycle Q Clear(g_c), s	8.5	0.0	0.3	5.9	4.3	41.1	2.1	31.9	2.8	23.2	0.0	0.0
Prop In Lane	0.12		1.00	1.00		1.00	1.00		1.00	1.00		0.04
Lane Grp Cap(c), veh/h	429	0	363	381	606	511	34	1416	630	650	1008	1054
V/C Ratio(X)	0.32	0.00	0.01	0.27	0.14	0.93	0.79	0.69	0.08	0.92	0.49	0.49
Avail Cap(c_a), veh/h	429	0	363	558	665	561	177	1416	630	836	1008	1054
HCM Platoon Ratio	1.00	1.00	1.00	1.00	1.00	1.00	1.00	1.00	1.00	2.00	2.00	2.00
Upstream Filter(I)	1.00	0.00	1.00	1.00	1.00	1.00	0.79	0.79	0.79	0.69	0.69	0.69
Uniform Delay (d), s/veh	44.5	0.0	41.4	35.7	33.3	45.7	68.4	34.8	26.0	42.5	0.0	0.0
Incr Delay (d2), s/veh	0.4	0.0	0.0	0.4	0.1	21.5	11.4	2.2	0.2	8.4	1.2	1.1
Initial Q Delay(d3),s/veh	0.0	0.0	0.0	0.0	0.0	0.0	0.0	0.0	0.0	0.0	0.0	0.0
%ile BackOfQ(50%),veh/ln	4.4	0.0	0.2	2.9	2.2	20.8	1.2	16.0	1.3	11.7	0.3	0.3
LnGrp Delay(d),s/veh	44.9	0.0	41.4	36.1	33.4	67.3	79.8	36.9	26.2	51.0	1.2	1.1
LnGrp LOS	D		D	D	C	E	E	D	C	D	A	A
Approach Vol, veh/h		141			661			1051			1614	
Approach Delay, s/veh		44.8			58.2			37.5			19.6	
Approach LOS		D			E			D			B	

Timer	1	2	3	4	5	6	7	8
Assigned Phs	1	2	3	4	5	6		8
Phs Duration (G+Y+Rc), s	6.7	83.8	13.1	36.5	30.5	60.0		49.6
Change Period (Y+Rc), s	4.0	5.0	5.0	5.0	4.0	5.0		5.0
Max Green Setting (Gmax), s	14.0	63.0	22.0	22.0	34.0	43.0		49.0
Max Q Clear Time (g_c+I1), s	4.1	2.0	7.9	10.5	25.2	33.9		43.1
Green Ext Time (p_c), s	0.0	13.3	0.3	0.4	1.3	5.6		1.5

Intersection Summary	
HCM 2010 Ctrl Delay	33.4
HCM 2010 LOS	C

Notes

Intersection	
Int Delay, s/veh	0.1

Movement	WBL	WBR	NBT	NBR	SBL	SBT
Lane Configurations		↱	↑	↱		↑
Traffic Vol, veh/h	0	15	745	25	0	830
Future Vol, veh/h	0	15	745	25	0	830
Conflicting Peds, #/hr	0	0	0	0	0	0
Sign Control	Stop	Stop	Free	Free	Free	Free
RT Channelized	-	None	-	None	-	None
Storage Length	-	0	-	0	-	-
Veh in Median Storage, #	0	-	0	-	-	0
Grade, %	0	-	0	-	-	0
Peak Hour Factor	92	92	92	92	92	92
Heavy Vehicles, %	2	2	2	2	2	2
Mvmt Flow	0	16	810	27	0	902

Major/Minor	Minor1		Major1		Major2	
Conflicting Flow All	-	810	0	0	-	-
Stage 1	-	-	-	-	-	-
Stage 2	-	-	-	-	-	-
Critical Hdwy	-	6.22	-	-	-	-
Critical Hdwy Stg 1	-	-	-	-	-	-
Critical Hdwy Stg 2	-	-	-	-	-	-
Follow-up Hdwy	-	3.318	-	-	-	-
Pot Cap-1 Maneuver	0	380	-	-	0	-
Stage 1	0	-	-	-	0	-
Stage 2	0	-	-	-	0	-
Platoon blocked, %			-	-		-
Mov Cap-1 Maneuver	-	380	-	-	-	-
Mov Cap-2 Maneuver	-	-	-	-	-	-
Stage 1	-	-	-	-	-	-
Stage 2	-	-	-	-	-	-

Approach	WB	NB	SB
HCM Control Delay, s	14.9	0	0
HCM LOS	B		

Minor Lane/Major Mvmt	NBT	NBR	WBLn1	SBT
Capacity (veh/h)	-	-	380	-
HCM Lane V/C Ratio	-	-	0.043	-
HCM Control Delay (s)	-	-	14.9	-
HCM Lane LOS	-	-	B	-
HCM 95th %tile Q(veh)	-	-	0.1	-

Intersection	
Int Delay, s/veh	1.5

Movement	WBL	WBR	NBT	NBR	SBL	SBT
Lane Configurations						
Traffic Vol, veh/h	65	35	770	20	10	945
Future Vol, veh/h	65	35	770	20	10	945
Conflicting Peds, #/hr	0	0	0	0	0	0
Sign Control	Stop	Stop	Free	Free	Free	Free
RT Channelized	-	None	-	None	-	None
Storage Length	0	100	-	100	100	-
Veh in Median Storage, #	0	-	0	-	-	0
Grade, %	0	-	0	-	-	0
Peak Hour Factor	92	92	92	92	92	92
Heavy Vehicles, %	2	2	2	2	2	2
Mvmt Flow	71	38	837	22	11	1027

Major/Minor	Minor1		Major1		Major2	
Conflicting Flow All	1886	837	0	0	859	0
Stage 1	837	-	-	-	-	-
Stage 2	1049	-	-	-	-	-
Critical Hdwy	6.42	6.22	-	-	4.12	-
Critical Hdwy Stg 1	5.42	-	-	-	-	-
Critical Hdwy Stg 2	5.42	-	-	-	-	-
Follow-up Hdwy	3.518	3.318	-	-	2.218	-
Pot Cap-1 Maneuver	78	367	-	-	782	-
Stage 1	425	-	-	-	-	-
Stage 2	337	-	-	-	-	-
Platoon blocked, %			-	-		-
Mov Cap-1 Maneuver	77	367	-	-	782	-
Mov Cap-2 Maneuver	202	-	-	-	-	-
Stage 1	419	-	-	-	-	-
Stage 2	337	-	-	-	-	-

Approach	WB	NB	SB
HCM Control Delay, s	26.4	0	0.1
HCM LOS	D		

Minor Lane/Major Mvmt	NBT	NBR	WBLn1	WBLn2	SBL	SBT
Capacity (veh/h)	-	-	202	367	782	-
HCM Lane V/C Ratio	-	-	0.35	0.104	0.014	-
HCM Control Delay (s)	-	-	32.1	15.9	9.7	-
HCM Lane LOS	-	-	D	C	A	-
HCM 95th %tile Q(veh)	-	-	1.5	0.3	0	-

Intersection	
Int Delay, s/veh	4.7

Movement	EBL	EBT	EBR	WBL	WBT	WBR	NBL	NBT	NBR	SBL	SBT	SBR
Lane Configurations												
Traffic Vol, veh/h	50	45	30	5	115	5	40	5	5	5	5	70
Future Vol, veh/h	50	45	30	5	115	5	40	5	5	5	5	70
Conflicting Peds, #/hr	0	0	0	0	0	0	0	0	0	0	0	0
Sign Control	Free	Free	Free	Free	Free	Free	Stop	Stop	Stop	Stop	Stop	Stop
RT Channelized	-	-	None	-	-	None	-	-	None	-	-	None
Storage Length	100	-	-	100	-	-	-	-	-	-	-	-
Veh in Median Storage, #	-	0	-	-	0	-	-	0	-	-	0	-
Grade, %	-	0	-	-	0	-	-	0	-	-	0	-
Peak Hour Factor	92	92	92	92	92	92	92	92	92	92	92	92
Heavy Vehicles, %	2	2	2	2	2	2	2	2	2	2	2	2
Mvmt Flow	54	49	33	5	125	5	43	5	5	5	5	76

Major/Minor	Major1			Major2			Minor1			Minor2		
Conflicting Flow All	130	0	0	82	0	0	352	314	66	317	328	128
Stage 1	-	-	-	-	-	-	174	174	-	138	138	-
Stage 2	-	-	-	-	-	-	178	140	-	179	190	-
Critical Hdwy	4.12	-	-	4.12	-	-	7.12	6.52	6.22	7.12	6.52	6.22
Critical Hdwy Stg 1	-	-	-	-	-	-	6.12	5.52	-	6.12	5.52	-
Critical Hdwy Stg 2	-	-	-	-	-	-	6.12	5.52	-	6.12	5.52	-
Follow-up Hdwy	2.218	-	-	2.218	-	-	3.518	4.018	3.318	3.518	4.018	3.318
Pot Cap-1 Maneuver	1455	-	-	1515	-	-	603	601	998	636	591	922
Stage 1	-	-	-	-	-	-	828	755	-	865	782	-
Stage 2	-	-	-	-	-	-	824	781	-	823	743	-
Platoon blocked, %		-	-		-	-						
Mov Cap-1 Maneuver	1455	-	-	1515	-	-	532	577	998	609	567	922
Mov Cap-2 Maneuver	-	-	-	-	-	-	532	577	-	609	567	-
Stage 1	-	-	-	-	-	-	797	727	-	833	780	-
Stage 2	-	-	-	-	-	-	748	779	-	782	716	-

Approach	EB	WB	NB	SB
HCM Control Delay, s	3	0.3	12.1	9.7
HCM LOS			B	A

Minor Lane/Major Mvmt	NBLn1	EBL	EBT	EBR	WBL	WBT	WBR	SBLn1
Capacity (veh/h)	563	1455	-	-	1515	-	-	861
HCM Lane V/C Ratio	0.097	0.037	-	-	0.004	-	-	0.101
HCM Control Delay (s)	12.1	7.6	-	-	7.4	-	-	9.7
HCM Lane LOS	B	A	-	-	A	-	-	A
HCM 95th %tile Q(veh)	0.3	0.1	-	-	0	-	-	0.3

Intersection	
Int Delay, s/veh	6.5

Movement	EBL	EBT	EBR	WBL	WBT	WBR	NBL	NBT	NBR	SBL	SBT	SBR
Lane Configurations												
Traffic Vol, veh/h	10	20	25	5	10	5	80	5	5	5	5	30
Future Vol, veh/h	10	20	25	5	10	5	80	5	5	5	5	30
Conflicting Peds, #/hr	0	0	0	0	0	0	0	0	0	0	0	0
Sign Control	Free	Free	Free	Free	Free	Free	Stop	Stop	Stop	Stop	Stop	Stop
RT Channelized	-	-	None	-	-	None	-	-	None	-	-	None
Storage Length	-	-	-	-	-	-	-	-	-	-	-	-
Veh in Median Storage, #	-	0	-	-	0	-	-	0	-	-	0	-
Grade, %	-	0	-	-	0	-	-	0	-	-	0	-
Peak Hour Factor	92	92	92	92	92	92	92	92	92	92	92	92
Heavy Vehicles, %	2	2	2	2	2	2	2	2	2	2	2	2
Mvmt Flow	11	22	27	5	11	5	87	5	5	5	5	33

Major/Minor	Major1			Major2			Minor1			Minor2		
Conflicting Flow All	16	0	0	49	0	0	101	84	36	87	95	14
Stage 1	-	-	-	-	-	-	58	58	-	24	24	-
Stage 2	-	-	-	-	-	-	43	26	-	63	71	-
Critical Hdwy	4.12	-	-	4.12	-	-	7.12	6.52	6.22	7.12	6.52	6.22
Critical Hdwy Stg 1	-	-	-	-	-	-	6.12	5.52	-	6.12	5.52	-
Critical Hdwy Stg 2	-	-	-	-	-	-	6.12	5.52	-	6.12	5.52	-
Follow-up Hdwy	2.218	-	-	2.218	-	-	3.518	4.018	3.318	3.518	4.018	3.318
Pot Cap-1 Maneuver	1602	-	-	1558	-	-	880	806	1037	899	795	1066
Stage 1	-	-	-	-	-	-	954	847	-	994	875	-
Stage 2	-	-	-	-	-	-	971	874	-	948	836	-
Platoon blocked, %		-	-		-	-						
Mov Cap-1 Maneuver	1602	-	-	1558	-	-	842	798	1037	883	787	1066
Mov Cap-2 Maneuver	-	-	-	-	-	-	842	798	-	883	787	-
Stage 1	-	-	-	-	-	-	947	841	-	987	872	-
Stage 2	-	-	-	-	-	-	933	871	-	930	830	-

Approach	EB	WB	NB	SB
HCM Control Delay, s	1.3	1.8	9.8	8.8
HCM LOS			A	A

Minor Lane/Major Mvmt	NBLn1	EBL	EBT	EBR	WBL	WBT	WBR	SBLn1
Capacity (veh/h)	848	1602	-	-	1558	-	-	996
HCM Lane V/C Ratio	0.115	0.007	-	-	0.003	-	-	0.044
HCM Control Delay (s)	9.8	7.3	0	-	7.3	0	-	8.8
HCM Lane LOS	A	A	A	-	A	A	-	A
HCM 95th %tile Q(veh)	0.4	0	-	-	0	-	-	0.1

Intersection	
Int Delay, s/veh	2.1

Movement	EBT	EBR	WBL	WBT	NBL	NBR
Lane Configurations						
Traffic Vol, veh/h	20	10	5	75	25	5
Future Vol, veh/h	20	10	5	75	25	5
Conflicting Peds, #/hr	0	0	0	0	0	0
Sign Control	Free	Free	Free	Free	Stop	Stop
RT Channelized	-	None	-	None	-	Stop
Storage Length	-	-	-	-	0	-
Veh in Median Storage, #	0	-	-	0	0	-
Grade, %	0	-	-	0	0	-
Peak Hour Factor	92	92	92	92	92	92
Heavy Vehicles, %	2	2	2	2	2	2
Mvmt Flow	22	11	5	82	27	5

Major/Minor	Major1		Major2		Minor1	
Conflicting Flow All	0	0	33	0	120	28
Stage 1	-	-	-	-	28	-
Stage 2	-	-	-	-	92	-
Critical Hdwy	-	-	4.12	-	6.42	6.22
Critical Hdwy Stg 1	-	-	-	-	5.42	-
Critical Hdwy Stg 2	-	-	-	-	5.42	-
Follow-up Hdwy	-	-	2.218	-	3.518	3.318
Pot Cap-1 Maneuver	-	-	1579	-	876	1047
Stage 1	-	-	-	-	995	-
Stage 2	-	-	-	-	932	-
Platoon blocked, %	-	-		-		
Mov Cap-1 Maneuver	-	-	1579	-	873	1047
Mov Cap-2 Maneuver	-	-	-	-	873	-
Stage 1	-	-	-	-	992	-
Stage 2	-	-	-	-	932	-

Approach	EB	WB	NB
HCM Control Delay, s	0	0.5	8.5
HCM LOS			A

Minor Lane/Major Mvmt	NBLn1	EBT	EBR	WBL	WBT
Capacity (veh/h)	1048	-	-	1579	-
HCM Lane V/C Ratio	0.031	-	-	0.003	-
HCM Control Delay (s)	8.5	-	-	7.3	0
HCM Lane LOS	A	-	-	A	A
HCM 95th %tile Q(veh)	0.1	-	-	0	-

Intersection	
Intersection Delay, s/veh	3.6
Intersection LOS	A

Approach	EB	WB	NB
Entry Lanes	1	1	1
Conflicting Circle Lanes	1	1	1
Adj Approach Flow, veh/h	27	48	43
Demand Flow Rate, veh/h	27	49	44
Vehicles Circulating, veh/h	5	39	16
Vehicles Exiting, veh/h	83	21	16
Follow-Up Headway, s	3.186	3.186	3.186
Ped Vol Crossing Leg, #/h	0	0	0
Ped Cap Adj	1.000	1.000	1.000
Approach Delay, s/veh	3.4	3.8	3.6
Approach LOS	A	A	A

Lane	Left	Left	Left
Designated Moves	TR	LT	LR
Assumed Moves	TR	LT	LR
RT Channelized			
Lane Util	1.000	1.000	1.000
Critical Headway, s	5.193	5.193	5.193
Entry Flow, veh/h	27	49	44
Cap Entry Lane, veh/h	1124	1087	1112
Entry HV Adj Factor	0.988	0.982	0.977
Flow Entry, veh/h	27	48	43
Cap Entry, veh/h	1111	1068	1087
V/C Ratio	0.024	0.045	0.040
Control Delay, s/veh	3.4	3.8	3.6
LOS	A	A	A
95th %tile Queue, veh	0	0	0

APPENDIX C

LEVEL OF SERVICE CALCULATIONS

- Future Year 2022 Scenario 3 PM Peak

HCM 2010 Signalized Intersection Summary
1: Napilihau Street

10/05/2017

Movement	EBL	EBT	EBR	WBL	WBT	WBR	NBL	NBT	NBR	SBL	SBT	SBR
Lane Configurations												
Traffic Volume (veh/h)	55	25	420	65	25	5	420	240	70	10	315	75
Future Volume (veh/h)	55	25	420	65	25	5	420	240	70	10	315	75
Number	7	4	14	3	8	18	5	2	12	1	6	16
Initial Q (Qb), veh	0	0	0	0	0	0	0	0	0	0	0	0
Ped-Bike Adj(A_pbT)	1.00		1.00	1.00		1.00	1.00		1.00	1.00		1.00
Parking Bus, Adj	1.00	1.00	1.00	1.00	1.00	1.00	1.00	1.00	1.00	1.00	1.00	1.00
Adj Sat Flow, veh/h/ln	1900	1863	1863	1863	1863	1900	1863	1863	1863	1863	1863	1863
Adj Flow Rate, veh/h	60	27	29	71	27	1	457	261	48	11	342	21
Adj No. of Lanes	0	1	1	1	1	0	1	1	1	1	1	1
Peak Hour Factor	0.92	0.92	0.92	0.92	0.92	0.92	0.92	0.92	0.92	0.92	0.92	0.92
Percent Heavy Veh, %	2	2	2	2	2	2	2	2	2	2	2	2
Cap, veh/h	216	70	179	216	202	7	537	1082	920	15	534	454
Arrive On Green	0.11	0.11	0.11	0.11	0.11	0.11	0.30	0.58	0.58	0.01	0.29	0.29
Sat Flow, veh/h	909	621	1583	1342	1785	66	1774	1863	1583	1774	1863	1583
Grp Volume(v), veh/h	87	0	29	71	0	28	457	261	48	11	342	21
Grp Sat Flow(s),veh/h/ln	1529	0	1583	1342	0	1851	1774	1863	1583	1774	1863	1583
Q Serve(g_s), s	2.1	0.0	0.9	2.8	0.0	0.7	13.0	3.7	0.7	0.3	8.6	0.5
Cycle Q Clear(g_c), s	2.8	0.0	0.9	5.6	0.0	0.7	13.0	3.7	0.7	0.3	8.6	0.5
Prop In Lane	0.69		1.00	1.00		0.04	1.00		1.00	1.00		1.00
Lane Grp Cap(c), veh/h	286	0	179	216	0	209	537	1082	920	15	534	454
V/C Ratio(X)	0.30	0.00	0.16	0.33	0.00	0.13	0.85	0.24	0.05	0.73	0.64	0.05
Avail Cap(c_a), veh/h	785	0	707	663	0	826	990	2738	2327	495	2218	1885
HCM Platoon Ratio	1.00	1.00	1.00	1.00	1.00	1.00	1.00	1.00	1.00	1.00	1.00	1.00
Upstream Filter(I)	1.00	0.00	1.00	1.00	0.00	1.00	1.00	1.00	1.00	1.00	1.00	1.00
Uniform Delay (d), s/veh	22.3	0.0	21.5	25.0	0.0	21.5	17.6	5.5	4.9	26.6	16.8	13.9
Incr Delay (d2), s/veh	0.6	0.0	0.4	0.9	0.0	0.3	3.9	0.2	0.0	50.3	2.7	0.1
Initial Q Delay(d3),s/veh	0.0	0.0	0.0	0.0	0.0	0.0	0.0	0.0	0.0	0.0	0.0	0.0
%ile BackOfQ(50%),veh/ln	1.3	0.0	0.4	1.1	0.0	0.4	6.9	2.0	0.3	0.4	4.8	0.2
LnGrp Delay(d),s/veh	22.9	0.0	22.0	25.9	0.0	21.8	21.5	5.7	4.9	76.9	19.5	14.0
LnGrp LOS	C		C	C		C	C	A	A	E	B	B
Approach Vol, veh/h		116			99			766			374	
Approach Delay, s/veh		22.7			24.7			15.1			20.9	
Approach LOS		C			C			B			C	

Timer	1	2	3	4	5	6	7	8
Assigned Phs	1	2		4	5	6		8
Phs Duration (G+Y+Rc), s	5.5	37.2		11.1	21.3	21.4		11.1
Change Period (Y+Rc), s	5.0	6.0		5.0	5.0	6.0		5.0
Max Green Setting (Gmax), s	15.0	79.0		24.0	30.0	64.0		24.0
Max Q Clear Time (g_c+I1), s	2.3	5.7		4.8	15.0	10.6		7.6
Green Ext Time (p_c), s	0.0	3.8		0.5	1.3	4.8		0.3

Intersection Summary	
HCM 2010 Ctrl Delay	18.0
HCM 2010 LOS	B

Movement	EBL	EBT	EBR	WBL	WBT	WBR	NBL	NBT	NBR	SBL	SBT	SBR
Lane Configurations												
Traffic Volume (veh/h)	75	20	175	55	15	10	220	655	50	25	665	80
Future Volume (veh/h)	75	20	175	55	15	10	220	655	50	25	665	80
Number	7	4	14	3	8	18	5	2	12	1	6	16
Initial Q (Qb), veh	0	0	0	0	0	0	0	0	0	0	0	0
Ped-Bike Adj(A_pbT)	1.00		1.00	1.00		1.00	1.00		1.00	1.00		1.00
Parking Bus, Adj	1.00	1.00	1.00	1.00	1.00	1.00	1.00	1.00	1.00	1.00	1.00	1.00
Adj Sat Flow, veh/h/ln	1900	1863	1863	1863	1863	1900	1863	1863	1863	1863	1863	1863
Adj Flow Rate, veh/h	82	22	14	60	16	1	239	712	0	27	723	48
Adj No. of Lanes	0	1	1	1	1	0	1	1	1	1	1	1
Peak Hour Factor	0.92	0.92	0.92	0.92	0.92	0.92	0.92	0.92	0.92	0.92	0.92	0.92
Percent Heavy Veh, %	2	2	2	2	2	2	2	2	2	2	2	2
Cap, veh/h	263	58	218	231	238	15	408	1038	883	370	881	746
Arrive On Green	0.14	0.14	0.14	0.14	0.14	0.14	0.10	0.56	0.00	0.02	0.47	0.47
Sat Flow, veh/h	1077	419	1583	1367	1735	108	1774	1863	1583	1774	1863	1577
Grp Volume(v), veh/h	104	0	14	60	0	17	239	712	0	27	723	48
Grp Sat Flow(s),veh/h/ln	1497	0	1583	1367	0	1844	1774	1863	1583	1774	1863	1577
Q Serve(g_s), s	3.0	0.0	0.4	2.4	0.0	0.4	3.4	15.3	0.0	0.4	18.6	0.9
Cycle Q Clear(g_c), s	3.5	0.0	0.4	5.9	0.0	0.4	3.4	15.3	0.0	0.4	18.6	0.9
Prop In Lane	0.79		1.00	1.00		0.06	1.00		1.00	1.00		1.00
Lane Grp Cap(c), veh/h	321	0	218	231	0	253	408	1038	883	370	881	746
V/C Ratio(X)	0.32	0.00	0.06	0.26	0.00	0.07	0.59	0.69	0.00	0.07	0.82	0.06
Avail Cap(c_a), veh/h	778	0	710	656	0	826	702	1703	1448	814	1703	1442
HCM Platoon Ratio	1.00	1.00	1.00	1.00	1.00	1.00	1.00	1.00	1.00	1.00	1.00	1.00
Upstream Filter(I)	1.00	0.00	1.00	1.00	0.00	1.00	1.00	1.00	0.00	1.00	1.00	1.00
Uniform Delay (d), s/veh	22.2	0.0	20.9	25.0	0.0	20.9	10.5	8.8	0.0	8.4	12.7	8.0
Incr Delay (d2), s/veh	0.6	0.0	0.1	0.6	0.0	0.1	1.3	0.8	0.0	0.1	2.0	0.0
Initial Q Delay(d3),s/veh	0.0	0.0	0.0	0.0	0.0	0.0	0.0	0.0	0.0	0.0	0.0	0.0
%ile BackOfQ(50%),veh/ln	1.5	0.0	0.2	0.9	0.0	0.2	2.0	7.9	0.0	0.2	9.9	0.4
LnGrp Delay(d),s/veh	22.8	0.0	21.1	25.6	0.0	21.1	11.8	9.7	0.0	8.4	14.6	8.0
LnGrp LOS	C		C	C		C	B	A		A	B	A
Approach Vol, veh/h		118			77			951			798	
Approach Delay, s/veh		22.6			24.6			10.2			14.0	
Approach LOS		C			C			B			B	

Timer	1	2	3	4	5	6	7	8
Assigned Phs	1	2		4	5	6		8
Phs Duration (G+Y+Rc), s	6.0	37.1		12.7	10.7	32.4		12.7
Change Period (Y+Rc), s	5.0	6.0		5.0	5.0	6.0		5.0
Max Green Setting (Gmax), s	15.0	51.0		25.0	15.0	51.0		25.0
Max Q Clear Time (g_c+I1), s	2.4	17.3		5.5	5.4	20.6		7.9
Green Ext Time (p_c), s	0.0	5.5		0.5	0.5	5.7		0.2

Intersection Summary	
HCM 2010 Ctrl Delay	13.1
HCM 2010 LOS	B

Movement	EBL	EBT	EBR	WBL	WBT	WBR	NBL	NBT	NBR	SBL	SBT	SBR
Lane Configurations												
Traffic Volume (veh/h)	60	50	100	130	50	60	170	870	135	110	785	75
Future Volume (veh/h)	60	50	100	130	50	60	170	870	135	110	785	75
Number	7	4	14	3	8	18	5	2	12	1	6	16
Initial Q (Qb), veh	0	0	0	0	0	0	0	0	0	0	0	0
Ped-Bike Adj(A_pbT)	1.00		0.97	1.00		0.99	1.00		1.00	1.00		1.00
Parking Bus, Adj	1.00	1.00	1.00	1.00	1.00	1.00	1.00	1.00	1.00	1.00	1.00	1.00
Adj Sat Flow, veh/h/ln	1863	1863	1900	1863	1863	1863	1863	1863	1863	1863	1863	1863
Adj Flow Rate, veh/h	65	54	56	141	54	6	185	946	101	120	853	36
Adj No. of Lanes	1	1	0	1	1	1	1	1	1	1	1	1
Peak Hour Factor	0.92	0.92	0.92	0.92	0.92	0.92	0.92	0.92	0.92	0.92	0.92	0.92
Percent Heavy Veh, %	2	2	2	2	2	2	2	2	2	2	2	2
Cap, veh/h	85	86	89	171	286	240	218	1001	851	150	930	789
Arrive On Green	0.05	0.10	0.10	0.10	0.15	0.15	0.12	0.54	0.54	0.08	0.50	0.50
Sat Flow, veh/h	1774	823	854	1774	1863	1562	1774	1863	1583	1774	1863	1580
Grp Volume(v), veh/h	65	0	110	141	54	6	185	946	101	120	853	36
Grp Sat Flow(s),veh/h/ln	1774	0	1677	1774	1863	1562	1774	1863	1583	1774	1863	1580
Q Serve(g_s), s	4.1	0.0	7.1	8.8	2.9	0.4	11.5	53.9	3.6	7.5	47.8	1.3
Cycle Q Clear(g_c), s	4.1	0.0	7.1	8.8	2.9	0.4	11.5	53.9	3.6	7.5	47.8	1.3
Prop In Lane	1.00		0.51	1.00		1.00	1.00		1.00	1.00		1.00
Lane Grp Cap(c), veh/h	85	0	175	171	286	240	218	1001	851	150	930	789
V/C Ratio(X)	0.77	0.00	0.63	0.82	0.19	0.03	0.85	0.94	0.12	0.80	0.92	0.05
Avail Cap(c_a), veh/h	314	0	312	314	347	291	393	1073	912	393	1073	910
HCM Platoon Ratio	1.00	1.00	1.00	1.00	1.00	1.00	1.00	1.00	1.00	1.00	1.00	1.00
Upstream Filter(I)	1.00	0.00	1.00	1.00	1.00	1.00	1.00	1.00	1.00	1.00	1.00	1.00
Uniform Delay (d), s/veh	53.1	0.0	48.4	50.0	41.7	40.6	48.5	24.5	12.9	50.8	26.1	14.5
Incr Delay (d2), s/veh	13.5	0.0	3.7	9.5	0.3	0.0	8.9	15.5	0.1	9.6	11.2	0.0
Initial Q Delay(d3),s/veh	0.0	0.0	0.0	0.0	0.0	0.0	0.0	0.0	0.0	0.0	0.0	0.0
%ile BackOfQ(50%),veh/ln	2.3	0.0	3.5	4.8	1.5	0.2	6.2	31.9	1.6	4.1	27.3	0.6
LnGrp Delay(d),s/veh	66.7	0.0	52.1	59.5	42.0	40.6	57.4	40.0	13.0	60.3	37.4	14.5
LnGrp LOS	E		D	E	D	D	E	D	B	E	D	B
Approach Vol, veh/h		175			201			1232			1009	
Approach Delay, s/veh		57.5			54.2			40.4			39.3	
Approach LOS		E			D			D			D	

Timer	1	2	3	4	5	6	7	8
Assigned Phs	1	2	3	4	5	6	7	8
Phs Duration (G+Y+Rc), s	14.5	65.7	15.9	16.8	18.8	61.3	10.4	22.3
Change Period (Y+Rc), s	5.0	5.0	5.0	5.0	5.0	5.0	5.0	5.0
Max Green Setting (Gmax), s	25.0	65.0	20.0	21.0	25.0	65.0	20.0	21.0
Max Q Clear Time (g_c+I1), s	9.5	55.9	10.8	9.1	13.5	49.8	6.1	4.9
Green Ext Time (p_c), s	0.2	4.8	0.2	0.4	0.4	5.6	0.1	0.2

Intersection Summary	
HCM 2010 Ctrl Delay	42.2
HCM 2010 LOS	D

Notes

Movement	EBL	EBT	EBR	WBL	WBT	WBR	NBL	NBT	NBR	SBL	SBT	SBR
Lane Configurations												
Traffic Volume (veh/h)	95	5	600	80	10	10	605	1095	10	5	955	20
Future Volume (veh/h)	95	5	600	80	10	10	605	1095	10	5	955	20
Number	3	8	18	7	4	14	1	6	16	5	2	12
Initial Q (Qb), veh	0	0	0	0	0	0	0	0	0	0	0	0
Ped-Bike Adj(A_pbT)	1.00		1.00	1.00		1.00	1.00		1.00	1.00		1.00
Parking Bus, Adj	1.00	1.00	1.00	1.00	1.00	1.00	1.00	1.00	1.00	1.00	1.00	1.00
Adj Sat Flow, veh/h/ln	1900	1863	1863	1900	1863	1900	1863	1863	1900	1863	1863	1863
Adj Flow Rate, veh/h	103	5	0	87	11	9	658	1190	11	5	1038	6
Adj No. of Lanes	0	1	1	0	1	0	1	2	0	1	2	1
Peak Hour Factor	0.92	0.92	0.92	0.92	0.92	0.92	0.92	0.92	0.92	0.92	0.92	0.92
Percent Heavy Veh, %	2	2	2	2	2	2	2	2	2	2	2	2
Cap, veh/h	192	6	138	180	15	12	696	2770	26	7	1354	606
Arrive On Green	0.10	0.09	0.00	0.10	0.09	0.09	0.39	0.77	0.77	0.00	0.38	0.38
Sat Flow, veh/h	1453	71	1583	1368	173	141	1774	3593	33	1774	3539	1583
Grp Volume(v), veh/h	108	0	0	107	0	0	658	586	615	5	1038	6
Grp Sat Flow(s),veh/h/ln	1524	0	1583	1682	0	0	1774	1770	1857	1774	1770	1583
Q Serve(g_s), s	0.9	0.0	0.0	0.0	0.0	0.0	39.0	12.4	12.4	0.3	27.9	0.3
Cycle Q Clear(g_c), s	7.2	0.0	0.0	6.3	0.0	0.0	39.0	12.4	12.4	0.3	27.9	0.3
Prop In Lane	0.95		1.00	0.81		0.08	1.00		0.02	1.00		1.00
Lane Grp Cap(c), veh/h	212	0	138	223	0	0	696	1364	1431	7	1354	606
V/C Ratio(X)	0.51	0.00	0.00	0.48	0.00	0.00	0.95	0.43	0.43	0.73	0.77	0.01
Avail Cap(c_a), veh/h	475	0	436	456	0	0	1157	1364	1431	1157	1853	829
HCM Platoon Ratio	1.00	1.00	1.00	1.00	1.00	1.00	1.00	1.00	1.00	1.00	1.00	1.00
Upstream Filter(I)	1.00	0.00	0.00	1.00	0.00	0.00	1.00	1.00	1.00	1.00	1.00	1.00
Uniform Delay (d), s/veh	48.1	0.0	0.0	47.8	0.0	0.0	32.0	4.3	4.3	54.2	29.4	20.8
Incr Delay (d2), s/veh	1.9	0.0	0.0	1.6	0.0	0.0	7.2	0.5	0.4	42.1	2.3	0.0
Initial Q Delay(d3),s/veh	0.0	0.0	0.0	0.0	0.0	0.0	0.0	0.0	0.0	0.0	0.0	0.0
%ile BackOfQ(50%),veh/ln	3.2	0.0	0.0	3.2	0.0	0.0	20.4	6.0	6.3	0.2	14.0	0.1
LnGrp Delay(d),s/veh	50.0	0.0	0.0	49.4	0.0	0.0	39.2	4.7	4.7	96.2	31.6	20.8
LnGrp LOS	D			D			D	A	A	F	C	C
Approach Vol, veh/h		108			107			1859			1049	
Approach Delay, s/veh		50.0			49.4			16.9			31.9	
Approach LOS		D			D			B			C	

Timer	1	2	3	4	5	6	7	8
Assigned Phs	1	2		4	5	6		8
Phs Duration (G+Y+Rc), s	46.7	47.6		14.5	4.4	89.9		14.5
Change Period (Y+Rc), s	4.0	6.0		5.0	4.0	6.0		5.0
Max Green Setting (Gmax), s	71.0	57.0		27.0	71.0	57.0		30.0
Max Q Clear Time (g_c+I1), s	41.0	29.9		8.3	2.3	14.4		9.2
Green Ext Time (p_c), s	1.7	11.7		0.3	0.0	16.0		0.3

Intersection Summary	
HCM 2010 Ctrl Delay	24.2
HCM 2010 LOS	C

Notes

Movement	EBL	EBT	EBR	WBL	WBT	WBR	NBL	NBT	NBR	SBL	SBT	SBR
Lane Configurations												
Traffic Volume (veh/h)	55	5	140	15	0	5	135	1645	10	10	1630	60
Future Volume (veh/h)	55	5	140	15	0	5	135	1645	10	10	1630	60
Number	3	8	18	7	4	14	1	6	16	5	2	12
Initial Q (Qb), veh	0	0	0	0	0	0	0	0	0	0	0	0
Ped-Bike Adj(A_pbT)	0.97		0.96	0.97		0.96	1.00		1.00	1.00		1.00
Parking Bus, Adj	1.00	1.00	1.00	1.00	1.00	1.00	1.00	1.00	1.00	1.00	1.00	1.00
Adj Sat Flow, veh/h/ln	1900	1863	1863	1900	1863	1900	1863	1863	1900	1863	1863	1863
Adj Flow Rate, veh/h	60	5	5	16	0	1	147	1788	11	11	1772	40
Adj No. of Lanes	0	1	1	0	1	0	1	2	0	1	2	1
Peak Hour Factor	0.92	0.92	0.92	0.92	0.92	0.92	0.92	0.92	0.92	0.92	0.92	0.92
Percent Heavy Veh, %	2	2	2	2	2	2	2	2	2	2	2	2
Cap, veh/h	226	16	173	175	2	7	178	2666	16	14	2289	1023
Arrive On Green	0.12	0.11	0.11	0.12	0.00	0.11	0.10	0.74	0.74	0.01	0.65	0.65
Sat Flow, veh/h	1377	140	1521	931	17	59	1774	3606	22	1774	3539	1582
Grp Volume(v), veh/h	65	0	5	17	0	0	147	877	922	11	1772	40
Grp Sat Flow(s),veh/h/ln	1517	0	1521	1008	0	0	1774	1770	1859	1774	1770	1582
Q Serve(g_s), s	0.0	0.0	0.3	1.0	0.0	0.0	8.2	25.8	25.9	0.6	35.7	0.9
Cycle Q Clear(g_c), s	3.4	0.0	0.3	4.4	0.0	0.0	8.2	25.8	25.9	0.6	35.7	0.9
Prop In Lane	0.92		1.00	0.94		0.06	1.00		0.01	1.00		1.00
Lane Grp Cap(c), veh/h	257	0	173	194	0	0	178	1308	1374	14	2289	1023
V/C Ratio(X)	0.25	0.00	0.03	0.09	0.00	0.00	0.83	0.67	0.67	0.79	0.77	0.04
Avail Cap(c_a), veh/h	416	0	347	350	0	0	370	1509	1586	194	2668	1193
HCM Platoon Ratio	1.00	1.00	1.00	1.00	1.00	1.00	1.00	1.00	1.00	1.00	1.00	1.00
Upstream Filter(I)	1.00	0.00	1.00	1.00	0.00	0.00	1.00	1.00	1.00	1.00	1.00	1.00
Uniform Delay (d), s/veh	40.7	0.0	39.7	42.2	0.0	0.0	44.5	6.8	6.8	49.9	12.6	6.4
Incr Delay (d2), s/veh	0.2	0.0	0.0	0.1	0.0	0.0	3.7	1.5	1.5	29.0	1.7	0.0
Initial Q Delay(d3),s/veh	0.0	0.0	0.0	0.0	0.0	0.0	0.0	0.0	0.0	0.0	0.0	0.0
%ile BackOfQ(50%),veh/ln	1.6	0.0	0.1	0.4	0.0	0.0	4.2	13.0	13.6	0.4	17.8	0.4
LnGrp Delay(d),s/veh	40.9	0.0	39.7	42.2	0.0	0.0	48.2	8.3	8.3	79.0	14.3	6.5
LnGrp LOS	D		D	D			D	A	A	E	B	A
Approach Vol, veh/h		70			17			1946			1823	
Approach Delay, s/veh		40.8			42.2			11.3			14.5	
Approach LOS		D			D			B			B	

Timer	1	2	3	4	5	6	7	8
Assigned Phs	1	2		4	5	6		8
Phs Duration (G+Y+Rc), s	14.1	70.2		16.5	4.8	79.5		16.5
Change Period (Y+Rc), s	4.0	5.0		5.0	4.0	5.0		5.0
Max Green Setting (Gmax), s	21.0	76.0		23.0	11.0	86.0		23.0
Max Q Clear Time (g_c+I1), s	10.2	37.7		6.4	2.6	27.9		5.4
Green Ext Time (p_c), s	0.1	27.5		0.0	0.0	36.1		0.1

Intersection Summary	
HCM 2010 Ctrl Delay	13.5
HCM 2010 LOS	B

Movement	EBL	EBT	EBR	WBL	WBT	WBR	NBL	NBT	NBR	SBL	SBT	SBR
Lane Configurations												
Traffic Volume (veh/h)	85	5	175	70	5	50	125	1620	60	35	1775	105
Future Volume (veh/h)	85	5	175	70	5	50	125	1620	60	35	1775	105
Number	3	8	18	7	4	14	1	6	16	5	2	12
Initial Q (Qb), veh	0	0	0	0	0	0	0	0	0	0	0	0
Ped-Bike Adj(A_pbT)	0.99		0.99	0.99		0.99	1.00		1.00	1.00		1.00
Parking Bus, Adj	1.00	1.00	1.00	1.00	1.00	1.00	1.00	1.00	1.00	1.00	1.00	1.00
Adj Sat Flow, veh/h/ln	1900	1863	1863	1863	1863	1900	1863	1863	1863	1863	1863	1863
Adj Flow Rate, veh/h	92	5	44	76	5	2	136	1761	48	38	1929	91
Adj No. of Lanes	0	1	1	1	1	0	1	2	1	1	2	1
Peak Hour Factor	0.92	0.92	0.92	0.92	0.92	0.92	0.92	0.92	0.92	0.92	0.92	0.92
Percent Heavy Veh, %	2	2	2	2	2	2	2	2	2	2	2	2
Cap, veh/h	222	10	216	138	174	70	157	2632	1177	49	2415	1081
Arrive On Green	0.14	0.14	0.14	0.14	0.14	0.14	0.09	0.74	0.74	0.03	0.68	0.68
Sat Flow, veh/h	1300	71	1563	1338	1261	505	1774	3539	1582	1774	3539	1583
Grp Volume(v), veh/h	97	0	44	76	0	7	136	1761	48	38	1929	91
Grp Sat Flow(s),veh/h/ln	1371	0	1563	1338	0	1766	1774	1770	1582	1774	1770	1583
Q Serve(g_s), s	10.5	0.0	4.1	9.2	0.0	0.6	12.5	41.9	1.3	3.5	62.8	3.2
Cycle Q Clear(g_c), s	11.1	0.0	4.1	20.3	0.0	0.6	12.5	41.9	1.3	3.5	62.8	3.2
Prop In Lane	0.95		1.00	1.00		0.29	1.00		1.00	1.00		1.00
Lane Grp Cap(c), veh/h	240	0	216	138	0	244	157	2632	1177	49	2415	1081
V/C Ratio(X)	0.40	0.00	0.20	0.55	0.00	0.03	0.86	0.67	0.04	0.78	0.80	0.08
Avail Cap(c_a), veh/h	250	0	227	148	0	257	280	2632	1177	108	2415	1081
HCM Platoon Ratio	1.00	1.00	1.00	1.00	1.00	1.00	1.00	1.00	1.00	1.00	1.00	1.00
Upstream Filter(I)	1.00	0.00	1.00	1.00	0.00	1.00	0.62	0.62	0.62	1.00	1.00	1.00
Uniform Delay (d), s/veh	65.9	0.0	63.1	75.5	0.0	61.6	74.2	10.8	5.6	79.7	18.3	8.8
Incr Delay (d2), s/veh	1.1	0.0	0.5	3.7	0.0	0.0	3.4	0.9	0.0	9.3	2.9	0.2
Initial Q Delay(d3),s/veh	0.0	0.0	0.0	0.0	0.0	0.0	0.0	0.0	0.0	0.0	0.0	0.0
%ile BackOfQ(50%),veh/ln	4.1	0.0	1.8	3.6	0.0	0.3	6.3	20.6	0.6	1.8	31.2	1.4
LnGrp Delay(d),s/veh	67.0	0.0	63.6	79.2	0.0	61.6	77.6	11.7	5.6	89.0	21.1	9.0
LnGrp LOS	E		E	E		E	E	B	A	F	C	A
Approach Vol, veh/h		141			83			1945			2058	
Approach Delay, s/veh		65.9			77.7			16.1			21.9	
Approach LOS		E			E			B			C	

Timer	1	2	3	4	5	6	7	8
Assigned Phs	1	2		4	5	6		8
Phs Duration (G+Y+Rc), s	18.6	118.6		27.8	8.6	128.7		27.8
Change Period (Y+Rc), s	4.0	6.0		5.0	4.0	6.0		5.0
Max Green Setting (Gmax), s	26.0	100.0		24.0	10.0	116.0		24.0
Max Q Clear Time (g_c+I1), s	14.5	64.8		22.3	5.5	43.9		13.1
Green Ext Time (p_c), s	0.2	28.4		0.0	0.0	41.1		0.3

Intersection Summary	
HCM 2010 Ctrl Delay	21.8
HCM 2010 LOS	C

Movement	EBL	EBT	EBR	WBL	WBT	WBR	NBL	NBT	NBR	SBL	SBT	SBR
Lane Configurations												
Traffic Volume (veh/h)	325	5	615	15	0	5	385	1630	10	80	1795	140
Future Volume (veh/h)	325	5	615	15	0	5	385	1630	10	80	1795	140
Number	3	8	18	7	4	14	1	6	16	5	2	12
Initial Q (Qb), veh	0	0	0	0	0	0	0	0	0	0	0	0
Ped-Bike Adj(A_pbT)	1.00		0.99	1.00		0.96	1.00		1.00	1.00		1.00
Parking Bus, Adj	1.00	1.00	1.00	1.00	1.00	1.00	1.00	1.00	1.00	1.00	1.00	1.00
Adj Sat Flow, veh/h/ln	1863	1863	1863	1900	1863	1900	1863	1863	1900	1863	1863	1863
Adj Flow Rate, veh/h	357	0	465	16	0	1	418	1772	11	87	1951	131
Adj No. of Lanes	2	0	2	0	1	0	2	2	0	1	2	1
Peak Hour Factor	0.92	0.92	0.92	0.92	0.92	0.92	0.92	0.92	0.92	0.92	0.92	0.92
Percent Heavy Veh, %	2	2	2	2	2	2	2	2	2	2	2	2
Cap, veh/h	519	0	889	67	0	4	485	2453	15	114	2137	1181
Arrive On Green	0.15	0.00	0.14	0.04	0.00	0.03	0.14	0.68	0.67	0.06	0.60	0.60
Sat Flow, veh/h	3548	0	3122	1653	0	103	3442	3606	22	1774	3539	1583
Grp Volume(v), veh/h	357	0	465	17	0	0	418	869	914	87	1951	131
Grp Sat Flow(s),veh/h/ln	1774	0	1561	1756	0	0	1721	1770	1859	1774	1770	1583
Q Serve(g_s), s	22.2	0.0	29.2	2.2	0.0	0.0	27.6	71.8	72.0	11.2	113.2	5.3
Cycle Q Clear(g_c), s	22.2	0.0	29.2	2.2	0.0	0.0	27.6	71.8	72.0	11.2	113.2	5.3
Prop In Lane	1.00		1.00	0.94		0.06	1.00		0.01	1.00		1.00
Lane Grp Cap(c), veh/h	519	0	889	71	0	0	485	1204	1264	114	2137	1181
V/C Ratio(X)	0.69	0.00	0.52	0.24	0.00	0.00	0.86	0.72	0.72	0.76	0.91	0.11
Avail Cap(c_a), veh/h	519	0	889	234	0	0	858	1476	1550	114	2297	1252
HCM Platoon Ratio	1.00	1.00	1.00	1.00	1.00	1.00	1.00	1.00	1.00	1.00	1.00	1.00
Upstream Filter(I)	1.00	0.00	1.00	1.00	0.00	0.00	1.00	1.00	1.00	1.00	1.00	1.00
Uniform Delay (d), s/veh	94.3	0.0	70.3	108.3	0.0	0.0	97.7	23.4	23.4	107.1	40.7	8.2
Incr Delay (d2), s/veh	3.2	0.0	0.3	0.6	0.0	0.0	1.8	1.6	1.6	23.0	6.0	0.1
Initial Q Delay(d3),s/veh	0.0	0.0	0.0	0.0	0.0	0.0	0.0	0.0	0.0	0.0	0.0	0.0
%ile BackOfQ(50%),veh/ln	11.1	0.0	12.7	1.1	0.0	0.0	13.3	35.6	37.4	6.2	57.1	3.7
LnGrp Delay(d),s/veh	97.5	0.0	70.6	108.9	0.0	0.0	99.6	25.0	25.0	130.1	46.7	8.3
LnGrp LOS	F		E	F			F	C	C	F	D	A
Approach Vol, veh/h		822			17			2201			2169	
Approach Delay, s/veh		82.3			108.9			39.2			47.7	
Approach LOS		F			F			D			D	

Timer	1	2	3	4	5	6	7	8
Assigned Phs	1	2		4	5	6		8
Phs Duration (G+Y+Rc), s	36.8	144.5		13.4	19.0	162.3		38.0
Change Period (Y+Rc), s	6.0	6.0		7.0	6.0	6.0		7.0
Max Green Setting (Gmax), s	56.0	149.0		28.0	13.0	192.0		31.0
Max Q Clear Time (g_c+I1), s	29.6	115.2		4.2	13.2	74.0		31.2
Green Ext Time (p_c), s	1.1	23.3		0.0	0.0	28.2		0.0

Intersection Summary	
HCM 2010 Ctrl Delay	49.8
HCM 2010 LOS	D

Notes

Movement	EBL	EBT	EBR	WBL	WBT	WBR	NBL	NBT	NBR	SBL	SBT	SBR
Lane Configurations												
Traffic Volume (veh/h)	10	0	5	90	5	65	10	1960	90	90	2350	5
Future Volume (veh/h)	10	0	5	90	5	65	10	1960	90	90	2350	5
Number	3	8	18	7	4	14	1	6	16	5	2	12
Initial Q (Qb), veh	0	0	0	0	0	0	0	0	0	0	0	0
Ped-Bike Adj(A_pbT)	1.00		1.00	1.00		1.00	1.00		1.00	1.00		1.00
Parking Bus, Adj	1.00	1.00	1.00	1.00	1.00	1.00	1.00	1.00	1.00	1.00	1.00	1.00
Adj Sat Flow, veh/h/ln	1900	1863	1900	1863	1863	1900	1863	1863	1900	1863	1863	1900
Adj Flow Rate, veh/h	11	0	1	98	5	3	11	2130	96	98	2554	5
Adj No. of Lanes	0	1	0	1	1	0	1	2	0	1	2	0
Peak Hour Factor	0.92	0.92	0.92	0.92	0.92	0.92	0.92	0.92	0.92	0.92	0.92	0.92
Percent Heavy Veh, %	2	2	2	2	2	2	2	2	2	2	2	2
Cap, veh/h	155	2	10	176	95	57	22	2628	118	122	2964	6
Arrive On Green	0.09	0.00	0.08	0.09	0.09	0.08	0.02	1.00	1.00	0.07	0.82	0.81
Sat Flow, veh/h	1234	24	114	1410	1092	655	1774	3451	154	1774	3624	7
Grp Volume(v), veh/h	12	0	0	98	0	8	11	1084	1142	98	1247	1312
Grp Sat Flow(s),veh/h/ln	1373	0	0	1410	0	1747	1774	1770	1836	1774	1770	1861
Q Serve(g_s), s	0.9	0.0	0.0	8.0	0.0	0.6	0.9	0.0	0.0	7.9	62.9	63.1
Cycle Q Clear(g_c), s	1.5	0.0	0.0	9.5	0.0	0.6	0.9	0.0	0.0	7.9	62.9	63.1
Prop In Lane	0.92		0.08	1.00		0.38	1.00		0.08	1.00		0.00
Lane Grp Cap(c), veh/h	167	0	0	176	0	152	22	1348	1398	122	1448	1523
V/C Ratio(X)	0.07	0.00	0.00	0.56	0.00	0.05	0.50	0.80	0.82	0.80	0.86	0.86
Avail Cap(c_a), veh/h	278	0	0	287	0	289	61	1348	1398	184	1448	1523
HCM Platoon Ratio	1.00	1.00	1.00	1.00	1.00	1.00	2.00	2.00	2.00	1.00	1.00	1.00
Upstream Filter(I)	1.00	0.00	0.00	1.00	0.00	1.00	0.52	0.52	0.52	1.00	1.00	1.00
Uniform Delay (d), s/veh	61.3	0.0	0.0	64.6	0.0	60.9	70.3	0.0	0.0	66.6	8.1	8.1
Incr Delay (d2), s/veh	0.2	0.0	0.0	2.7	0.0	0.1	3.4	2.8	2.9	8.0	6.9	6.7
Initial Q Delay(d3),s/veh	0.0	0.0	0.0	0.0	0.0	0.0	0.0	0.0	0.0	0.0	0.0	0.0
%ile BackOfQ(50%),veh/ln	0.5	0.0	0.0	4.0	0.0	0.3	0.5	1.0	1.1	4.1	32.6	34.5
LnGrp Delay(d),s/veh	61.5	0.0	0.0	67.4	0.0	61.0	73.7	2.8	2.9	74.5	15.1	14.8
LnGrp LOS	E			E		E	E	A	A	E	B	B
Approach Vol, veh/h		12			106			2237			2657	
Approach Delay, s/veh		61.5			66.9			3.2			17.1	
Approach LOS		E			E			A			B	

Timer	1	2	3	4	5	6	7	8
Assigned Phs	1	2		4	5	6		8
Phs Duration (G+Y+Rc), s	5.8	122.6		16.6	14.0	114.4		16.6
Change Period (Y+Rc), s	4.0	5.0		5.0	4.0	5.0		5.0
Max Green Setting (Gmax), s	5.0	103.0		23.0	15.0	93.0		23.0
Max Q Clear Time (g_c+I1), s	2.9	65.1		11.5	9.9	2.0		3.5
Green Ext Time (p_c), s	0.0	36.4		0.2	0.1	70.0		0.0

Intersection Summary	
HCM 2010 Ctrl Delay	12.1
HCM 2010 LOS	B

Movement	EBL	EBT	EBR	WBL	WBT	WBR	NBL	NBT	NBR	SBL	SBT	SBR
Lane Configurations												
Traffic Volume (veh/h)	190	15	10	60	5	10	5	1870	20	5	1990	340
Future Volume (veh/h)	190	15	10	60	5	10	5	1870	20	5	1990	340
Number	3	8	18	7	4	14	1	6	16	5	2	12
Initial Q (Qb), veh	0	0	0	0	0	0	0	0	0	0	0	0
Ped-Bike Adj(A_pbT)	1.00		1.00	1.00		1.00	1.00		1.00	1.00		1.00
Parking Bus, Adj	1.00	1.00	1.00	1.00	1.00	1.00	1.00	1.00	1.00	1.00	1.00	1.00
Adj Sat Flow, veh/h/ln	1900	1863	1900	1900	1863	1900	1863	1863	1900	1863	1863	1863
Adj Flow Rate, veh/h	207	16	9	65	5	7	5	2033	21	5	2163	290
Adj No. of Lanes	0	1	0	0	1	0	1	2	0	1	2	1
Peak Hour Factor	0.92	0.92	0.92	0.92	0.92	0.92	0.92	0.92	0.92	0.92	0.92	0.92
Percent Heavy Veh, %	2	2	2	2	2	2	2	2	2	2	2	2
Cap, veh/h	279	18	10	287	23	26	7	2649	27	7	2612	1169
Arrive On Green	0.18	0.18	0.17	0.18	0.18	0.17	0.01	0.98	0.97	0.00	0.74	0.74
Sat Flow, veh/h	1324	102	58	1375	130	151	1774	3589	37	1774	3539	1583
Grp Volume(v), veh/h	232	0	0	77	0	0	5	1001	1053	5	2163	290
Grp Sat Flow(s),veh/h/ln	1484	0	0	1656	0	0	1774	1770	1856	1774	1770	1583
Q Serve(g_s), s	16.3	0.0	0.0	0.0	0.0	0.0	0.4	6.1	6.2	0.4	59.7	8.5
Cycle Q Clear(g_c), s	22.0	0.0	0.0	5.7	0.0	0.0	0.4	6.1	6.2	0.4	59.7	8.5
Prop In Lane	0.89		0.04	0.84		0.09	1.00		0.02	1.00		1.00
Lane Grp Cap(c), veh/h	307	0	0	336	0	0	7	1306	1370	7	2612	1169
V/C Ratio(X)	0.75	0.00	0.00	0.23	0.00	0.00	0.75	0.77	0.77	0.75	0.83	0.25
Avail Cap(c_a), veh/h	362	0	0	391	0	0	37	1306	1370	37	2612	1169
HCM Platoon Ratio	1.00	1.00	1.00	1.00	1.00	1.00	1.33	1.33	1.33	1.00	1.00	1.00
Upstream Filter(I)	1.00	0.00	0.00	1.00	0.00	0.00	0.52	0.52	0.52	0.34	0.34	0.34
Uniform Delay (d), s/veh	58.0	0.0	0.0	51.7	0.0	0.0	72.1	0.4	0.4	72.2	12.8	6.1
Incr Delay (d2), s/veh	7.4	0.0	0.0	0.3	0.0	0.0	26.7	2.3	2.2	18.6	1.1	0.2
Initial Q Delay(d3),s/veh	0.0	0.0	0.0	0.0	0.0	0.0	0.0	0.0	0.0	0.0	0.0	0.0
%ile BackOfQ(50%),veh/ln	9.7	0.0	0.0	2.7	0.0	0.0	0.2	2.7	2.8	0.2	29.2	3.8
LnGrp Delay(d),s/veh	65.4	0.0	0.0	52.0	0.0	0.0	98.7	2.7	2.6	90.8	13.9	6.3
LnGrp LOS	E			D			F	A	A	F	B	A
Approach Vol, veh/h		232			77			2059			2458	
Approach Delay, s/veh		65.4			52.0			2.9			13.2	
Approach LOS		E			D			A			B	

Timer	1	2	3	4	5	6	7	8
Assigned Phs	1	2		4	5	6		8
Phs Duration (G+Y+Rc), s	4.5	111.0		29.4	4.5	111.0		29.4
Change Period (Y+Rc), s	4.0	5.0		5.0	4.0	5.0		5.0
Max Green Setting (Gmax), s	3.0	98.0		30.0	3.0	98.0		30.0
Max Q Clear Time (g_c+I1), s	2.4	61.7		7.7	2.4	8.2		24.0
Green Ext Time (p_c), s	0.0	34.7		0.2	0.0	74.1		0.4

Intersection Summary	
HCM 2010 Ctrl Delay	11.9
HCM 2010 LOS	B

Movement	EBL	EBT	EBR	WBL	WBT	WBR	NBL	NBT	NBR	SBL	SBT	SBR
Lane Configurations												
Traffic Volume (veh/h)	190	35	45	95	25	20	55	1660	105	30	1920	160
Future Volume (veh/h)	190	35	45	95	25	20	55	1660	105	30	1920	160
Number	3	8	18	7	4	14	1	6	16	5	2	12
Initial Q (Qb), veh	0	0	0	0	0	0	0	0	0	0	0	0
Ped-Bike Adj(A_pbT)	0.98		0.98	0.99		0.98	1.00		1.00	1.00		1.00
Parking Bus, Adj	1.00	1.00	1.00	1.00	1.00	1.00	1.00	1.00	1.00	1.00	1.00	1.00
Adj Sat Flow, veh/h/ln	1900	1863	1863	1863	1863	1900	1863	1863	1900	1863	1863	1900
Adj Flow Rate, veh/h	207	38	10	103	27	2	60	1804	111	33	2087	170
Adj No. of Lanes	0	1	1	1	1	0	1	2	0	1	2	0
Peak Hour Factor	0.92	0.92	0.92	0.92	0.92	0.92	0.92	0.92	0.92	0.92	0.92	0.92
Percent Heavy Veh, %	2	2	2	2	2	2	2	2	2	2	2	2
Cap, veh/h	268	41	309	357	342	25	73	2350	143	42	2242	180
Arrive On Green	0.20	0.20	0.20	0.20	0.20	0.19	0.08	1.00	1.00	0.05	1.00	1.00
Sat Flow, veh/h	1111	204	1545	1347	1710	127	1774	3389	207	1774	3318	267
Grp Volume(v), veh/h	245	0	10	103	0	29	60	934	981	33	1100	1157
Grp Sat Flow(s),veh/h/ln	1315	0	1545	1347	0	1837	1774	1770	1826	1774	1770	1815
Q Serve(g_s), s	24.9	0.0	0.8	0.0	0.0	1.9	4.8	0.0	0.0	2.7	0.0	0.0
Cycle Q Clear(g_c), s	26.7	0.0	0.8	8.2	0.0	1.9	4.8	0.0	0.0	2.7	0.0	0.0
Prop In Lane	0.84		1.00	1.00		0.07	1.00		0.11	1.00		0.15
Lane Grp Cap(c), veh/h	309	0	309	357	0	367	73	1227	1266	42	1196	1227
V/C Ratio(X)	0.79	0.00	0.03	0.29	0.00	0.08	0.82	0.76	0.77	0.79	0.92	0.94
Avail Cap(c_a), veh/h	309	0	309	357	0	367	73	1227	1266	73	1196	1227
HCM Platoon Ratio	1.00	1.00	1.00	1.00	1.00	1.00	2.00	2.00	2.00	2.00	2.00	2.00
Upstream Filter(I)	1.00	0.00	1.00	1.00	0.00	1.00	0.21	0.21	0.21	0.45	0.45	0.45
Uniform Delay (d), s/veh	58.0	0.0	46.7	49.7	0.0	47.2	66.0	0.0	0.0	68.7	0.0	0.0
Incr Delay (d2), s/veh	13.2	0.0	0.0	0.4	0.0	0.1	13.4	1.0	1.0	5.3	6.5	8.3
Initial Q Delay(d3),s/veh	0.0	0.0	0.0	0.0	0.0	0.0	0.0	0.0	0.0	0.0	0.0	0.0
%ile BackOfQ(50%),veh/ln	10.8	0.0	0.3	3.6	0.0	1.0	2.6	0.3	0.4	1.4	2.2	2.8
LnGrp Delay(d),s/veh	71.2	0.0	46.7	50.1	0.0	47.3	79.4	1.0	1.0	74.0	6.5	8.3
LnGrp LOS	E		D	D		D	E	A	A	E	A	A
Approach Vol, veh/h		255			132			1975			2290	
Approach Delay, s/veh		70.3			49.5			3.4			8.4	
Approach LOS		E			D			A			A	

Timer	1	2	3	4	5	6	7	8
Assigned Phs	1	2		4	5	6		8
Phs Duration (G+Y+Rc), s	10.0	102.0		33.0	7.4	104.6		33.0
Change Period (Y+Rc), s	4.0	5.0		5.0	4.0	5.0		5.0
Max Green Setting (Gmax), s	6.0	97.0		28.0	6.0	97.0		28.0
Max Q Clear Time (g_c+I1), s	3.8	2.0		10.2	4.7	2.0		28.7
Green Ext Time (p_c), s	0.0	72.1		0.4	0.0	51.7		0.0

Intersection Summary	
HCM 2010 Ctrl Delay	10.8
HCM 2010 LOS	B

Notes

Movement	EBL	EBT	EBR	WBL	WBT	WBR	NBL	NBT	NBR	SBL	SBT	SBR
Lane Configurations												
Traffic Volume (veh/h)	65	185	60	125	110	745	55	1005	195	655	1270	65
Future Volume (veh/h)	65	185	60	125	110	745	55	1005	195	655	1270	65
Number	7	4	14	3	8	18	1	6	16	5	2	12
Initial Q (Qb), veh	0	0	0	0	0	0	0	0	0	0	0	0
Ped-Bike Adj(A_pbT)	0.99		0.98	1.00		0.98	1.00		0.99	1.00		0.99
Parking Bus, Adj	1.00	1.00	1.00	1.00	1.00	1.00	1.00	1.00	1.00	1.00	1.00	1.00
Adj Sat Flow, veh/h/ln	1900	1863	1863	1863	1863	1863	1863	1863	1863	1863	1863	1900
Adj Flow Rate, veh/h	71	201	13	136	120	505	60	1092	130	712	1380	69
Adj No. of Lanes	0	1	1	1	1	1	1	2	1	2	2	0
Peak Hour Factor	0.92	0.92	0.92	0.92	0.92	0.92	0.92	0.92	0.92	0.92	0.92	0.92
Percent Heavy Veh, %	2	2	2	2	2	2	2	2	2	2	2	2
Cap, veh/h	114	278	393	253	639	535	77	1260	559	751	1822	91
Arrive On Green	0.25	0.25	0.25	0.06	0.34	0.34	0.04	0.36	0.36	0.44	1.00	1.00
Sat Flow, veh/h	325	1096	1550	1774	1863	1558	1774	3539	1570	3442	3430	171
Grp Volume(v), veh/h	272	0	13	136	120	505	60	1092	130	712	711	738
Grp Sat Flow(s),veh/h/ln	1421	0	1550	1774	1863	1558	1774	1770	1570	1721	1770	1831
Q Serve(g_s), s	21.7	0.0	0.9	8.1	6.6	45.7	4.9	41.7	8.4	28.8	0.0	0.0
Cycle Q Clear(g_c), s	25.2	0.0	0.9	8.1	6.6	45.7	4.9	41.7	8.4	28.8	0.0	0.0
Prop In Lane	0.26		1.00	1.00		1.00	1.00		1.00	1.00		0.09
Lane Grp Cap(c), veh/h	391	0	393	253	639	535	77	1260	559	751	940	973
V/C Ratio(X)	0.69	0.00	0.03	0.54	0.19	0.94	0.78	0.87	0.23	0.95	0.76	0.76
Avail Cap(c_a), veh/h	413	0	417	253	668	559	110	1260	559	807	940	973
HCM Platoon Ratio	1.00	1.00	1.00	1.00	1.00	1.00	1.00	1.00	1.00	2.00	2.00	2.00
Upstream Filter(I)	1.00	0.00	1.00	1.00	1.00	1.00	0.88	0.88	0.88	0.24	0.24	0.24
Uniform Delay (d), s/veh	49.3	0.0	40.8	38.2	33.4	46.3	68.7	43.5	32.8	40.1	0.0	0.0
Incr Delay (d2), s/veh	4.7	0.0	0.0	2.3	0.1	24.6	11.0	7.3	0.9	6.4	1.4	1.4
Initial Q Delay(d3),s/veh	0.0	0.0	0.0	0.0	0.0	0.0	0.0	0.0	0.0	0.0	0.0	0.0
%ile BackOfQ(50%),veh/ln	10.6	0.0	0.4	4.1	3.4	23.3	2.6	21.6	3.8	14.2	0.4	0.4
LnGrp Delay(d),s/veh	54.1	0.0	40.8	40.5	33.6	70.9	79.7	50.8	33.6	46.5	1.4	1.4
LnGrp LOS	D		D	D	C	E	E	D	C	D	A	A
Approach Vol, veh/h		285			761			1282			2161	
Approach Delay, s/veh		53.4			59.6			50.4			16.2	
Approach LOS		D			E			D			B	

Timer	1	2	3	4	5	6	7	8
Assigned Phs	1	2	3	4	5	6		8
Phs Duration (G+Y+Rc), s	10.3	81.0	13.0	40.7	35.6	55.6		53.7
Change Period (Y+Rc), s	4.0	5.0	5.0	5.0	4.0	5.0		5.0
Max Green Setting (Gmax), s	9.0	71.0	8.0	38.0	34.0	46.0		51.0
Max Q Clear Time (g_c+I1), s	10.9	2.0	10.1	27.2	30.8	43.7		47.7
Green Ext Time (p_c), s	0.0	26.1	0.0	1.0	0.8	1.9		1.1

Intersection Summary	
HCM 2010 Ctrl Delay	35.7
HCM 2010 LOS	D

Notes

Intersection	
Int Delay, s/veh	0.5

Movement	WBL	WBR	NBT	NBR	SBL	SBT
Lane Configurations						
Traffic Vol, veh/h	0	50	925	65	0	890
Future Vol, veh/h	0	50	925	65	0	890
Conflicting Peds, #/hr	0	0	0	0	0	0
Sign Control	Stop	Stop	Free	Free	Free	Free
RT Channelized	-	None	-	None	-	None
Storage Length	-	0	-	0	-	-
Veh in Median Storage, #	0	-	0	-	-	0
Grade, %	0	-	0	-	-	0
Peak Hour Factor	92	92	92	92	92	92
Heavy Vehicles, %	2	2	2	2	2	2
Mvmt Flow	0	54	1005	71	0	967

Major/Minor	Minor1		Major1		Major2	
Conflicting Flow All	-	1005	0	0	-	-
Stage 1	-	-	-	-	-	-
Stage 2	-	-	-	-	-	-
Critical Hdwy	-	6.22	-	-	-	-
Critical Hdwy Stg 1	-	-	-	-	-	-
Critical Hdwy Stg 2	-	-	-	-	-	-
Follow-up Hdwy	-	3.318	-	-	-	-
Pot Cap-1 Maneuver	0	293	-	-	0	-
Stage 1	0	-	-	-	0	-
Stage 2	0	-	-	-	0	-
Platoon blocked, %			-	-		-
Mov Cap-1 Maneuver	-	293	-	-	-	-
Mov Cap-2 Maneuver	-	-	-	-	-	-
Stage 1	-	-	-	-	-	-
Stage 2	-	-	-	-	-	-

Approach	WB	NB	SB
HCM Control Delay, s	20.1	0	0
HCM LOS	C		

Minor Lane/Major Mvmt	NBT	NBR	WBLn1	SBT
Capacity (veh/h)	-	-	293	-
HCM Lane V/C Ratio	-	-	0.185	-
HCM Control Delay (s)	-	-	20.1	-
HCM Lane LOS	-	-	C	-
HCM 95th %tile Q(veh)	-	-	0.7	-

Intersection	
Int Delay, s/veh	1.9

Movement	WBL	WBR	NBT	NBR	SBL	SBT
Lane Configurations						
Traffic Vol, veh/h	55	30	1120	80	45	970
Future Vol, veh/h	55	30	1120	80	45	970
Conflicting Peds, #/hr	0	0	0	0	0	0
Sign Control	Stop	Stop	Free	Free	Free	Free
RT Channelized	-	None	-	None	-	None
Storage Length	0	100	-	100	100	-
Veh in Median Storage, #	0	-	0	-	-	0
Grade, %	0	-	0	-	-	0
Peak Hour Factor	92	92	92	92	92	92
Heavy Vehicles, %	2	2	2	2	2	2
Mvmt Flow	60	33	1217	87	49	1054

Major/Minor	Minor1		Major1		Major2	
Conflicting Flow All	2369	1217	0	0	1304	0
Stage 1	1217	-	-	-	-	-
Stage 2	1152	-	-	-	-	-
Critical Hdwy	6.42	6.22	-	-	4.12	-
Critical Hdwy Stg 1	5.42	-	-	-	-	-
Critical Hdwy Stg 2	5.42	-	-	-	-	-
Follow-up Hdwy	3.518	3.318	-	-	2.218	-
Pot Cap-1 Maneuver	~ 38	220	-	-	531	-
Stage 1	280	-	-	-	-	-
Stage 2	301	-	-	-	-	-
Platoon blocked, %			-	-		-
Mov Cap-1 Maneuver	~ 35	220	-	-	531	-
Mov Cap-2 Maneuver	131	-	-	-	-	-
Stage 1	254	-	-	-	-	-
Stage 2	301	-	-	-	-	-

Approach	WB	NB	SB
HCM Control Delay, s	43.3	0	0.6
HCM LOS	E		

Minor Lane/Major Mvmt	NBT	NBR	WBLn1	WBLn2	SBL	SBT
Capacity (veh/h)	-	-	131	220	531	-
HCM Lane V/C Ratio	-	-	0.456	0.148	0.092	-
HCM Control Delay (s)	-	-	53.7	24.2	12.5	-
HCM Lane LOS	-	-	F	C	B	-
HCM 95th %tile Q(veh)	-	-	2	0.5	0.3	-

Notes

~: Volume exceeds capacity $: Delay exceeds 300s +: Computation Not Defined *: All major volume in platoon

Intersection	
Int Delay, s/veh	6.8

Movement	EBL	EBT	EBR	WBL	WBT	WBR	NBL	NBT	NBR	SBL	SBT	SBR
Lane Configurations												
Traffic Vol, veh/h	125	90	80	5	70	10	65	10	15	30	10	105
Future Vol, veh/h	125	90	80	5	70	10	65	10	15	30	10	105
Conflicting Peds, #/hr	0	0	0	0	0	0	0	0	0	0	0	0
Sign Control	Free	Free	Free	Free	Free	Free	Stop	Stop	Stop	Stop	Stop	Stop
RT Channelized	-	-	None	-	-	None	-	-	None	-	-	None
Storage Length	100	-	-	100	-	-	-	-	-	-	-	-
Veh in Median Storage, #	-	0	-	-	0	-	-	0	-	-	0	-
Grade, %	-	0	-	-	0	-	-	0	-	-	0	-
Peak Hour Factor	92	92	92	92	92	92	92	92	92	92	92	92
Heavy Vehicles, %	2	2	2	2	2	2	2	2	2	2	2	2
Mvmt Flow	136	98	87	5	76	11	71	11	16	33	11	114

Major/Minor	Major1			Major2			Minor1			Minor2		
Conflicting Flow All	87	0	0	185	0	0	568	511	142	519	549	82
Stage 1	-	-	-	-	-	-	414	414	-	92	92	-
Stage 2	-	-	-	-	-	-	154	97	-	427	457	-
Critical Hdwy	4.12	-	-	4.12	-	-	7.12	6.52	6.22	7.12	6.52	6.22
Critical Hdwy Stg 1	-	-	-	-	-	-	6.12	5.52	-	6.12	5.52	-
Critical Hdwy Stg 2	-	-	-	-	-	-	6.12	5.52	-	6.12	5.52	-
Follow-up Hdwy	2.218	-	-	2.218	-	-	3.518	4.018	3.318	3.518	4.018	3.318
Pot Cap-1 Maneuver	1509	-	-	1390	-	-	434	466	906	467	443	978
Stage 1	-	-	-	-	-	-	616	593	-	915	819	-
Stage 2	-	-	-	-	-	-	848	815	-	606	568	-
Platoon blocked, %		-	-		-	-						
Mov Cap-1 Maneuver	1509	-	-	1390	-	-	349	422	906	417	401	978
Mov Cap-2 Maneuver	-	-	-	-	-	-	349	422	-	417	401	-
Stage 1	-	-	-	-	-	-	561	540	-	833	816	-
Stage 2	-	-	-	-	-	-	736	812	-	531	517	-

Approach	EB	WB	NB	SB
HCM Control Delay, s	3.2	0.4	17	11.5
HCM LOS			C	B

Minor Lane/Major Mvmt	NBLn1	EBL	EBT	EBR	WBL	WBT	WBR	SBLn1
Capacity (veh/h)	397	1509	-	-	1390	-	-	710
HCM Lane V/C Ratio	0.246	0.09	-	-	0.004	-	-	0.222
HCM Control Delay (s)	17	7.6	-	-	7.6	-	-	11.5
HCM Lane LOS	C	A	-	-	A	-	-	B
HCM 95th %tile Q(veh)	1	0.3	-	-	0	-	-	0.8

Intersection	
Int Delay, s/veh	4.5

Movement	EBL	EBT	EBR	WBL	WBT	WBR	NBL	NBT	NBR	SBL	SBT	SBR
Lane Configurations												
Traffic Vol, veh/h	30	15	90	5	20	5	50	5	5	5	5	20
Future Vol, veh/h	30	15	90	5	20	5	50	5	5	5	5	20
Conflicting Peds, #/hr	0	0	0	0	0	0	0	0	0	0	0	0
Sign Control	Free	Free	Free	Free	Free	Free	Stop	Stop	Stop	Stop	Stop	Stop
RT Channelized	-	-	None	-	-	None	-	-	None	-	-	None
Storage Length	-	-	-	-	-	-	-	-	-	-	-	-
Veh in Median Storage, #	-	0	-	-	0	-	-	0	-	-	0	-
Grade, %	-	0	-	-	0	-	-	0	-	-	0	-
Peak Hour Factor	92	92	92	92	92	92	92	92	92	92	92	92
Heavy Vehicles, %	2	2	2	2	2	2	2	2	2	2	2	2
Mvmt Flow	33	16	98	5	22	5	54	5	5	5	5	22

Major/Minor	Major1			Major2			Minor1			Minor2		
Conflicting Flow All	27	0	0	114	0	0	179	168	65	171	215	25
Stage 1	-	-	-	-	-	-	131	131	-	35	35	-
Stage 2	-	-	-	-	-	-	48	37	-	136	180	-
Critical Hdwy	4.12	-	-	4.12	-	-	7.12	6.52	6.22	7.12	6.52	6.22
Critical Hdwy Stg 1	-	-	-	-	-	-	6.12	5.52	-	6.12	5.52	-
Critical Hdwy Stg 2	-	-	-	-	-	-	6.12	5.52	-	6.12	5.52	-
Follow-up Hdwy	2.218	-	-	2.218	-	-	3.518	4.018	3.318	3.518	4.018	3.318
Pot Cap-1 Maneuver	1587	-	-	1475	-	-	783	725	999	792	683	1051
Stage 1	-	-	-	-	-	-	873	788	-	981	866	-
Stage 2	-	-	-	-	-	-	965	864	-	867	750	-
Platoon blocked, %		-	-		-	-						
Mov Cap-1 Maneuver	1587	-	-	1475	-	-	748	707	999	768	666	1051
Mov Cap-2 Maneuver	-	-	-	-	-	-	748	707	-	768	666	-
Stage 1	-	-	-	-	-	-	854	771	-	959	863	-
Stage 2	-	-	-	-	-	-	936	861	-	837	734	-

Approach	EB	WB	NB	SB
HCM Control Delay, s	1.6	1.2	10.2	9.1
HCM LOS			B	A

Minor Lane/Major Mvmt	NBLn1	EBL	EBT	EBR	WBL	WBT	WBR	SBLn1
Capacity (veh/h)	760	1587	-	-	1475	-	-	908
HCM Lane V/C Ratio	0.086	0.021	-	-	0.004	-	-	0.036
HCM Control Delay (s)	10.2	7.3	0	-	7.5	0	-	9.1
HCM Lane LOS	B	A	A	-	A	A	-	A
HCM 95th %tile Q(veh)	0.3	0.1	-	-	0	-	-	0.1

Intersection	
Int Delay, s/veh	1.9

Movement	EBT	EBR	WBL	WBT	NBL	NBR
Lane Configurations						
Traffic Vol, veh/h	85	40	5	45	35	5
Future Vol, veh/h	85	40	5	45	35	5
Conflicting Peds, #/hr	0	0	0	0	0	0
Sign Control	Free	Free	Free	Free	Stop	Stop
RT Channelized	-	None	-	None	-	None
Storage Length	-	-	-	-	0	-
Veh in Median Storage, #	0	-	-	0	0	-
Grade, %	0	-	-	0	0	-
Peak Hour Factor	92	92	92	92	92	92
Heavy Vehicles, %	2	2	2	2	2	2
Mvmt Flow	92	43	5	49	38	5

Major/Minor	Major1		Major2		Minor1	
Conflicting Flow All	0	0	135	0	173	114
Stage 1	-	-	-	-	114	-
Stage 2	-	-	-	-	59	-
Critical Hdwy	-	-	4.12	-	6.42	6.22
Critical Hdwy Stg 1	-	-	-	-	5.42	-
Critical Hdwy Stg 2	-	-	-	-	5.42	-
Follow-up Hdwy	-	-	2.218	-	3.518	3.318
Pot Cap-1 Maneuver	-	-	1449	-	817	939
Stage 1	-	-	-	-	911	-
Stage 2	-	-	-	-	964	-
Platoon blocked, %	-	-		-		
Mov Cap-1 Maneuver	-	-	1449	-	814	939
Mov Cap-2 Maneuver	-	-	-	-	814	-
Stage 1	-	-	-	-	907	-
Stage 2	-	-	-	-	964	-

Approach	EB	WB	NB
HCM Control Delay, s	0	0.7	9.6
HCM LOS			A

Minor Lane/Major Mvmt	NBLn1	EBT	EBR	WBL	WBT
Capacity (veh/h)	828	-	-	1449	-
HCM Lane V/C Ratio	0.053	-	-	0.004	-
HCM Control Delay (s)	9.6	-	-	7.5	0
HCM Lane LOS	A	-	-	A	A
HCM 95th %tile Q(veh)	0.2	-	-	0	-

Intersection	
Intersection Delay, s/veh	3.9
Intersection LOS	A

Approach	EB	WB	NB
Entry Lanes	1	1	1
Conflicting Circle Lanes	1	1	1
Adj Approach Flow, veh/h	97	32	27
Demand Flow Rate, veh/h	99	33	27
Vehicles Circulating, veh/h	5	22	55
Vehicles Exiting, veh/h	50	60	49
Follow-Up Headway, s	3.186	3.186	3.186
Ped Vol Crossing Leg, #/h	0	0	0
Ped Cap Adj	1.000	1.000	1.000
Approach Delay, s/veh	4.0	3.6	3.6
Approach LOS	A	A	A

Lane	Left	Left	Left
Designated Moves	TR	LT	LR
Assumed Moves	TR	LT	LR
RT Channelized			
Lane Util	1.000	1.000	1.000
Critical Headway, s	5.193	5.193	5.193
Entry Flow, veh/h	99	33	27
Cap Entry Lane, veh/h	1124	1105	1069
Entry HV Adj Factor	0.979	0.983	1.000
Flow Entry, veh/h	97	32	27
Cap Entry, veh/h	1101	1087	1069
V/C Ratio	0.088	0.030	0.025
Control Delay, s/veh	4.0	3.6	3.6
LOS	A	A	A
95th %tile Queue, veh	0	0	0

APPENDIX C

LEVEL OF SERVICE CALCULATIONS

- Future Year 2022 Scenario 3 WE Peak

Movement	EBL	EBT	EBR	WBL	WBT	WBR	NBL	NBT	NBR	SBL	SBT	SBR
Lane Configurations												
Traffic Volume (veh/h)	40	45	385	50	50	20	325	370	45	20	325	90
Future Volume (veh/h)	40	45	385	50	50	20	325	370	45	20	325	90
Number	7	4	14	3	8	18	5	2	12	1	6	16
Initial Q (Qb), veh	0	0	0	0	0	0	0	0	0	0	0	0
Ped-Bike Adj(A_pbT)	0.99		0.99	0.99		0.99	1.00		1.00	1.00		1.00
Parking Bus, Adj	1.00	1.00	1.00	1.00	1.00	1.00	1.00	1.00	1.00	1.00	1.00	1.00
Adj Sat Flow, veh/h/ln	1900	1863	1863	1863	1863	1900	1863	1863	1863	1863	1863	1863
Adj Flow Rate, veh/h	43	49	34	54	54	10	353	402	28	22	353	28
Adj No. of Lanes	0	1	1	1	1	0	1	1	1	1	1	1
Peak Hour Factor	0.92	0.92	0.92	0.92	0.92	0.92	0.92	0.92	0.92	0.92	0.92	0.92
Percent Heavy Veh, %	2	2	2	2	2	2	2	2	2	2	2	2
Cap, veh/h	173	126	193	234	188	35	436	1002	850	28	573	487
Arrive On Green	0.12	0.12	0.12	0.12	0.12	0.12	0.25	0.54	0.54	0.02	0.31	0.31
Sat Flow, veh/h	540	1021	1564	1299	1526	283	1774	1863	1580	1774	1863	1581
Grp Volume(v), veh/h	92	0	34	54	0	64	353	402	28	22	353	28
Grp Sat Flow(s),veh/h/ln	1561	0	1564	1299	0	1809	1774	1863	1580	1774	1863	1581
Q Serve(g_s), s	1.1	0.0	1.0	2.0	0.0	1.6	9.3	6.3	0.4	0.6	8.0	0.6
Cycle Q Clear(g_c), s	2.7	0.0	1.0	4.7	0.0	1.6	9.3	6.3	0.4	0.6	8.0	0.6
Prop In Lane	0.47		1.00	1.00		0.16	1.00		1.00	1.00		1.00
Lane Grp Cap(c), veh/h	299	0	193	234	0	223	436	1002	850	28	573	487
V/C Ratio(X)	0.31	0.00	0.18	0.23	0.00	0.29	0.81	0.40	0.03	0.78	0.62	0.06
Avail Cap(c_a), veh/h	864	0	758	703	0	877	1075	2972	2521	537	2407	2043
HCM Platoon Ratio	1.00	1.00	1.00	1.00	1.00	1.00	1.00	1.00	1.00	1.00	1.00	1.00
Upstream Filter(I)	1.00	0.00	1.00	1.00	0.00	1.00	1.00	1.00	1.00	1.00	1.00	1.00
Uniform Delay (d), s/veh	20.2	0.0	19.5	22.4	0.0	19.7	17.6	6.7	5.4	24.3	14.6	12.1
Incr Delay (d2), s/veh	0.6	0.0	0.4	0.5	0.0	0.7	3.6	0.6	0.0	36.5	2.3	0.1
Initial Q Delay(d3),s/veh	0.0	0.0	0.0	0.0	0.0	0.0	0.0	0.0	0.0	0.0	0.0	0.0
%ile BackOfQ(50%),veh/ln	1.2	0.0	0.4	0.8	0.0	0.8	5.0	3.3	0.2	0.6	4.5	0.3
LnGrp Delay(d),s/veh	20.7	0.0	19.9	22.9	0.0	20.4	21.2	7.3	5.4	60.8	16.9	12.2
LnGrp LOS	C		B	C		C	C	A	A	E	B	B
Approach Vol, veh/h		126			118			783			403	
Approach Delay, s/veh		20.5			21.6			13.5			19.0	
Approach LOS		C			C			B			B	

Timer	1	2	3	4	5	6	7	8
Assigned Phs	1	2		4	5	6		8
Phs Duration (G+Y+Rc), s	5.8	32.6		11.1	17.2	21.2		11.1
Change Period (Y+Rc), s	5.0	6.0		5.0	5.0	6.0		5.0
Max Green Setting (Gmax), s	15.0	79.0		24.0	30.0	64.0		24.0
Max Q Clear Time (g_c+I1), s	2.6	8.3		4.7	11.3	10.0		6.7
Green Ext Time (p_c), s	0.0	6.0		0.5	1.0	5.0		0.4

Intersection Summary	
HCM 2010 Ctrl Delay	16.3
HCM 2010 LOS	B

Movement	EBL	EBT	EBR	WBL	WBT	WBR	NBL	NBT	NBR	SBL	SBT	SBR
Lane Configurations												
Traffic Volume (veh/h)	55	20	245	50	15	5	170	565	35	15	595	60
Future Volume (veh/h)	55	20	245	50	15	5	170	565	35	15	595	60
Number	7	4	14	3	8	18	5	2	12	1	6	16
Initial Q (Qb), veh	0	0	0	0	0	0	0	0	0	0	0	0
Ped-Bike Adj(A_pbT)	0.98		0.98	0.99		0.98	1.00		1.00	1.00		1.00
Parking Bus, Adj	1.00	1.00	1.00	1.00	1.00	1.00	1.00	1.00	1.00	1.00	1.00	1.00
Adj Sat Flow, veh/h/ln	1900	1863	1863	1863	1863	1900	1863	1863	1863	1863	1863	1863
Adj Flow Rate, veh/h	60	22	21	54	16	1	185	614	0	16	647	27
Adj No. of Lanes	0	1	1	1	1	0	1	1	1	1	1	1
Peak Hour Factor	0.92	0.92	0.92	0.92	0.92	0.92	0.92	0.92	0.92	0.92	0.92	0.92
Percent Heavy Veh, %	2	2	2	2	2	2	2	2	2	2	2	2
Cap, veh/h	264	78	222	275	248	15	418	970	825	397	822	696
Arrive On Green	0.14	0.14	0.14	0.14	0.14	0.14	0.09	0.52	0.00	0.01	0.44	0.44
Sat Flow, veh/h	966	546	1556	1339	1733	108	1774	1863	1583	1774	1863	1578
Grp Volume(v), veh/h	82	0	21	54	0	17	185	614	0	16	647	27
Grp Sat Flow(s),veh/h/ln	1512	0	1556	1339	0	1841	1774	1863	1583	1774	1863	1578
Q Serve(g_s), s	1.6	0.0	0.6	1.9	0.0	0.4	2.6	11.6	0.0	0.2	14.7	0.5
Cycle Q Clear(g_c), s	2.3	0.0	0.6	4.2	0.0	0.4	2.6	11.6	0.0	0.2	14.7	0.5
Prop In Lane	0.73		1.00	1.00		0.06	1.00		1.00	1.00		1.00
Lane Grp Cap(c), veh/h	342	0	222	275	0	263	418	970	825	397	822	696
V/C Ratio(X)	0.24	0.00	0.09	0.20	0.00	0.06	0.44	0.63	0.00	0.04	0.79	0.04
Avail Cap(c_a), veh/h	878	0	788	762	0	933	794	1925	1636	915	1925	1631
HCM Platoon Ratio	1.00	1.00	1.00	1.00	1.00	1.00	1.00	1.00	1.00	1.00	1.00	1.00
Upstream Filter(I)	1.00	0.00	1.00	1.00	0.00	1.00	1.00	1.00	0.00	1.00	1.00	1.00
Uniform Delay (d), s/veh	19.1	0.0	18.4	21.0	0.0	18.3	8.8	8.4	0.0	8.1	11.8	7.8
Incr Delay (d2), s/veh	0.4	0.0	0.2	0.3	0.0	0.1	0.7	0.7	0.0	0.0	1.7	0.0
Initial Q Delay(d3),s/veh	0.0	0.0	0.0	0.0	0.0	0.0	0.0	0.0	0.0	0.0	0.0	0.0
%ile BackOfQ(50%),veh/ln	1.0	0.0	0.3	0.7	0.0	0.2	1.3	6.0	0.0	0.1	7.8	0.2
LnGrp Delay(d),s/veh	19.4	0.0	18.6	21.3	0.0	18.4	9.5	9.1	0.0	8.1	13.5	7.9
LnGrp LOS	B		B	C		B	A	A		A	B	A
Approach Vol, veh/h		103			71			799			690	
Approach Delay, s/veh		19.2			20.6			9.2			13.2	
Approach LOS		B			C			A			B	

Timer	1	2	3	4	5	6	7	8
Assigned Phs	1	2		4	5	6		8
Phs Duration (G+Y+Rc), s	5.6	31.7		12.1	9.5	27.8		12.1
Change Period (Y+Rc), s	5.0	6.0		5.0	5.0	6.0		5.0
Max Green Setting (Gmax), s	15.0	51.0		25.0	15.0	51.0		25.0
Max Q Clear Time (g_c+I1), s	2.2	13.6		4.3	4.6	16.7		6.2
Green Ext Time (p_c), s	0.0	4.5		0.4	0.3	4.9		0.2

Intersection Summary	
HCM 2010 Ctrl Delay	12.0
HCM 2010 LOS	B

Movement	EBL	EBT	EBR	WBL	WBT	WBR	NBL	NBT	NBR	SBL	SBT	SBR
Lane Configurations												
Traffic Volume (veh/h)	45	75	85	215	80	95	85	640	185	165	680	50
Future Volume (veh/h)	45	75	85	215	80	95	85	640	185	165	680	50
Number	7	4	14	3	8	18	5	2	12	1	6	16
Initial Q (Qb), veh	0	0	0	0	0	0	0	0	0	0	0	0
Ped-Bike Adj(A_pbT)	1.00		0.99	1.00		1.00	1.00		1.00	1.00		1.00
Parking Bus, Adj	1.00	1.00	1.00	1.00	1.00	1.00	1.00	1.00	1.00	1.00	1.00	1.00
Adj Sat Flow, veh/h/ln	1863	1863	1900	1863	1863	1863	1863	1863	1863	1863	1863	1863
Adj Flow Rate, veh/h	49	82	63	234	87	17	92	696	131	179	739	22
Adj No. of Lanes	1	1	0	1	1	1	1	1	1	1	1	1
Peak Hour Factor	0.92	0.92	0.92	0.92	0.92	0.92	0.92	0.92	0.92	0.92	0.92	0.92
Percent Heavy Veh, %	2	2	2	2	2	2	2	2	2	2	2	2
Cap, veh/h	63	107	82	268	420	357	119	784	666	215	885	751
Arrive On Green	0.04	0.11	0.11	0.15	0.23	0.23	0.07	0.42	0.42	0.12	0.47	0.47
Sat Flow, veh/h	1774	972	747	1774	1863	1583	1774	1863	1583	1774	1863	1582
Grp Volume(v), veh/h	49	0	145	234	87	17	92	696	131	179	739	22
Grp Sat Flow(s),veh/h/ln	1774	0	1719	1774	1863	1583	1774	1863	1583	1774	1863	1582
Q Serve(g_s), s	2.8	0.0	8.3	13.1	3.9	0.9	5.2	35.1	5.3	10.0	35.1	0.8
Cycle Q Clear(g_c), s	2.8	0.0	8.3	13.1	3.9	0.9	5.2	35.1	5.3	10.0	35.1	0.8
Prop In Lane	1.00		0.43	1.00		1.00	1.00		1.00	1.00		1.00
Lane Grp Cap(c), veh/h	63	0	189	268	420	357	119	784	666	215	885	751
V/C Ratio(X)	0.77	0.00	0.77	0.87	0.21	0.05	0.77	0.89	0.20	0.83	0.84	0.03
Avail Cap(c_a), veh/h	349	0	355	349	420	357	436	1191	1012	436	1191	1011
HCM Platoon Ratio	1.00	1.00	1.00	1.00	1.00	1.00	1.00	1.00	1.00	1.00	1.00	1.00
Upstream Filter(I)	1.00	0.00	1.00	1.00	1.00	1.00	1.00	1.00	1.00	1.00	1.00	1.00
Uniform Delay (d), s/veh	48.6	0.0	44.0	42.2	32.0	30.8	46.7	27.2	18.6	43.7	23.2	14.2
Incr Delay (d2), s/veh	17.7	0.0	6.4	17.0	0.2	0.1	10.1	5.7	0.1	8.1	4.0	0.0
Initial Q Delay(d3),s/veh	0.0	0.0	0.0	0.0	0.0	0.0	0.0	0.0	0.0	0.0	0.0	0.0
%ile BackOfQ(50%),veh/ln	1.7	0.0	4.3	7.7	2.0	0.4	2.9	19.2	2.4	5.4	18.8	0.3
LnGrp Delay(d),s/veh	66.3	0.0	50.3	59.2	32.2	30.9	56.8	32.9	18.7	51.8	27.2	14.2
LnGrp LOS	E		D	E	C	C	E	C	B	D	C	B
Approach Vol, veh/h		194			338			919			940	
Approach Delay, s/veh		54.4			50.8			33.3			31.6	
Approach LOS		D			D			C			C	

Timer	1	2	3	4	5	6	7	8
Assigned Phs	1	2	3	4	5	6	7	8
Phs Duration (G+Y+Rc), s	17.3	47.8	20.4	16.2	11.8	53.3	8.6	27.9
Change Period (Y+Rc), s	5.0	5.0	5.0	5.0	5.0	5.0	5.0	5.0
Max Green Setting (Gmax), s	25.0	65.0	20.0	21.0	25.0	65.0	20.0	21.0
Max Q Clear Time (g_c+I1), s	12.0	37.1	15.1	10.3	7.2	37.1	4.8	5.9
Green Ext Time (p_c), s	0.4	5.6	0.3	0.5	0.2	5.7	0.1	0.4

Intersection Summary	
HCM 2010 Ctrl Delay	36.8
HCM 2010 LOS	D

Movement	EBL	EBT	EBR	WBL	WBT	WBR	NBL	NBT	NBR	SBL	SBT	SBR
Lane Configurations												
Traffic Volume (veh/h)	80	10	595	10	0	5	410	875	5	0	950	70
Future Volume (veh/h)	80	10	595	10	0	5	410	875	5	0	950	70
Number	3	8	18	7	4	14	1	6	16	5	2	12
Initial Q (Qb), veh	0	0	0	0	0	0	0	0	0	0	0	0
Ped-Bike Adj(A_pbT)	1.00		1.00	1.00		1.00	1.00		1.00	1.00		1.00
Parking Bus, Adj	1.00	1.00	1.00	1.00	1.00	1.00	1.00	1.00	1.00	1.00	1.00	1.00
Adj Sat Flow, veh/h/ln	1900	1863	1863	1900	1863	1900	1863	1863	1900	1863	1863	1863
Adj Flow Rate, veh/h	87	11	0	11	0	1	446	951	5	0	1033	40
Adj No. of Lanes	0	1	1	0	1	0	1	2	0	1	2	1
Peak Hour Factor	0.92	0.92	0.92	0.92	0.92	0.92	0.92	0.92	0.92	0.92	0.92	0.92
Percent Heavy Veh, %	2	2	2	2	2	2	2	2	2	2	2	2
Cap, veh/h	200	14	135	215	3	12	499	2784	15	2	1550	691
Arrive On Green	0.10	0.09	0.00	0.10	0.00	0.09	0.28	0.77	0.77	0.00	0.44	0.44
Sat Flow, veh/h	1302	165	1583	1464	41	137	1774	3610	19	1774	3539	1578
Grp Volume(v), veh/h	98	0	0	12	0	0	446	466	490	0	1033	40
Grp Sat Flow(s),veh/h/ln	1467	0	1583	1642	0	0	1774	1770	1859	1774	1770	1578
Q Serve(g_s), s	4.4	0.0	0.0	0.0	0.0	0.0	18.5	6.3	6.3	0.0	17.7	1.1
Cycle Q Clear(g_c), s	4.9	0.0	0.0	0.5	0.0	0.0	18.5	6.3	6.3	0.0	17.7	1.1
Prop In Lane	0.89		1.00	0.92		0.08	1.00		0.01	1.00		1.00
Lane Grp Cap(c), veh/h	233	0	135	251	0	0	499	1365	1434	2	1550	691
V/C Ratio(X)	0.42	0.00	0.00	0.05	0.00	0.00	0.89	0.34	0.34	0.00	0.67	0.06
Avail Cap(c_a), veh/h	676	0	620	628	0	0	1644	1365	1434	1644	2633	1174
HCM Platoon Ratio	1.00	1.00	1.00	1.00	1.00	1.00	1.00	1.00	1.00	1.00	1.00	1.00
Upstream Filter(I)	1.00	0.00	0.00	1.00	0.00	0.00	1.00	1.00	1.00	0.00	1.00	1.00
Uniform Delay (d), s/veh	33.8	0.0	0.0	31.9	0.0	0.0	26.4	2.7	2.7	0.0	17.1	12.4
Incr Delay (d2), s/veh	1.2	0.0	0.0	0.1	0.0	0.0	2.3	0.3	0.3	0.0	1.1	0.1
Initial Q Delay(d3),s/veh	0.0	0.0	0.0	0.0	0.0	0.0	0.0	0.0	0.0	0.0	0.0	0.0
%ile BackOfQ(50%),veh/ln	2.0	0.0	0.0	0.2	0.0	0.0	9.4	3.1	3.2	0.0	8.8	0.5
LnGrp Delay(d),s/veh	35.0	0.0	0.0	31.9	0.0	0.0	28.8	3.0	3.0	0.0	18.2	12.5
LnGrp LOS	D			C			C	A	A		B	B
Approach Vol, veh/h		98			12			1402			1073	
Approach Delay, s/veh		35.0			31.9			11.2			17.9	
Approach LOS		D			C			B			B	

Timer	1	2	3	4	5	6	7	8
Assigned Phs	1	2		4	5	6		8
Phs Duration (G+Y+Rc), s	25.5	39.5		11.5	0.0	65.1		11.5
Change Period (Y+Rc), s	4.0	6.0		5.0	4.0	6.0		5.0
Max Green Setting (Gmax), s	71.0	57.0		27.0	71.0	57.0		30.0
Max Q Clear Time (g_c+I1), s	20.5	19.7		2.5	0.0	8.3		6.9
Green Ext Time (p_c), s	1.0	13.8		0.0	0.0	11.6		0.3

Intersection Summary	
HCM 2010 Ctrl Delay	15.0
HCM 2010 LOS	B

Movement	EBL	EBT	EBR	WBL	WBT	WBR	NBL	NBT	NBR	SBL	SBT	SBR
Lane Configurations												
Traffic Volume (veh/h)	65	5	145	15	5	15	105	1220	20	10	1500	70
Future Volume (veh/h)	65	5	145	15	5	15	105	1220	20	10	1500	70
Number	3	8	18	7	4	14	1	6	16	5	2	12
Initial Q (Qb), veh	0	0	0	0	0	0	0	0	0	0	0	0
Ped-Bike Adj(A_pbT)	0.98		0.98	0.98		0.98	1.00		1.00	1.00		1.00
Parking Bus, Adj	1.00	1.00	1.00	1.00	1.00	1.00	1.00	1.00	1.00	1.00	1.00	1.00
Adj Sat Flow, veh/h/ln	1900	1863	1863	1900	1863	1900	1863	1863	1900	1863	1863	1863
Adj Flow Rate, veh/h	71	5	5	16	5	1	114	1326	21	11	1630	47
Adj No. of Lanes	0	1	1	0	1	0	1	2	0	1	2	1
Peak Hour Factor	0.92	0.92	0.92	0.92	0.92	0.92	0.92	0.92	0.92	0.92	0.92	0.92
Percent Heavy Veh, %	2	2	2	2	2	2	2	2	2	2	2	2
Cap, veh/h	213	12	142	133	33	4	145	2620	41	14	2341	1045
Arrive On Green	0.10	0.09	0.09	0.10	0.09	0.09	0.08	0.73	0.73	0.01	0.66	0.66
Sat Flow, veh/h	1423	130	1547	652	353	48	1774	3566	56	1774	3539	1580
Grp Volume(v), veh/h	76	0	5	22	0	0	114	658	689	11	1630	47
Grp Sat Flow(s),veh/h/ln	1553	0	1547	1054	0	0	1774	1770	1853	1774	1770	1580
Q Serve(g_s), s	0.0	0.0	0.2	0.3	0.0	0.0	5.3	13.3	13.3	0.5	24.5	0.9
Cycle Q Clear(g_c), s	3.4	0.0	0.2	3.7	0.0	0.0	5.3	13.3	13.3	0.5	24.5	0.9
Prop In Lane	0.93		1.00	0.73		0.05	1.00		0.03	1.00		1.00
Lane Grp Cap(c), veh/h	243	0	142	183	0	0	145	1300	1361	14	2341	1045
V/C Ratio(X)	0.31	0.00	0.04	0.12	0.00	0.00	0.79	0.51	0.51	0.77	0.70	0.04
Avail Cap(c_a), veh/h	495	0	420	446	0	0	439	1794	1879	230	3172	1416
HCM Platoon Ratio	1.00	1.00	1.00	1.00	1.00	1.00	1.00	1.00	1.00	1.00	1.00	1.00
Upstream Filter(I)	1.00	0.00	1.00	1.00	0.00	0.00	1.00	1.00	1.00	1.00	1.00	1.00
Uniform Delay (d), s/veh	36.1	0.0	35.1	35.5	0.0	0.0	38.2	4.7	4.7	42.0	9.0	5.0
Incr Delay (d2), s/veh	0.3	0.0	0.0	0.1	0.0	0.0	3.6	0.7	0.6	26.5	0.8	0.0
Initial Q Delay(d3),s/veh	0.0	0.0	0.0	0.0	0.0	0.0	0.0	0.0	0.0	0.0	0.0	0.0
%ile BackOfQ(50%),veh/ln	1.7	0.0	0.1	0.5	0.0	0.0	2.8	6.6	6.9	0.4	12.0	0.4
LnGrp Delay(d),s/veh	36.3	0.0	35.1	35.7	0.0	0.0	41.8	5.4	5.4	68.5	9.8	5.0
LnGrp LOS	D		D	D			D	A	A	E	A	A
Approach Vol, veh/h		81			22			1461			1688	
Approach Delay, s/veh		36.3			35.7			8.2			10.1	
Approach LOS		D			D			A			B	

Timer	1	2	3	4	5	6	7	8
Assigned Phs	1	2		4	5	6		8
Phs Duration (G+Y+Rc), s	10.9	61.1		12.8	4.7	67.3		12.8
Change Period (Y+Rc), s	4.0	5.0		5.0	4.0	5.0		5.0
Max Green Setting (Gmax), s	21.0	76.0		23.0	11.0	86.0		23.0
Max Q Clear Time (g_c+I1), s	7.3	26.5		5.7	2.5	15.3		5.4
Green Ext Time (p_c), s	0.1	29.6		0.0	0.0	22.6		0.1

Intersection Summary	
HCM 2010 Ctrl Delay	10.1
HCM 2010 LOS	B

Movement	EBL	EBT	EBR	WBL	WBT	WBR	NBL	NBT	NBR	SBL	SBT	SBR
Lane Configurations												
Traffic Volume (veh/h)	75	5	180	45	5	40	110	1270	50	35	1565	85
Future Volume (veh/h)	75	5	180	45	5	40	110	1270	50	35	1565	85
Number	3	8	18	7	4	14	1	6	16	5	2	12
Initial Q (Qb), veh	0	0	0	0	0	0	0	0	0	0	0	0
Ped-Bike Adj(A_pbT)	1.00		1.00	1.00		1.00	1.00		1.00	1.00		1.00
Parking Bus, Adj	1.00	1.00	1.00	1.00	1.00	1.00	1.00	1.00	1.00	1.00	1.00	1.00
Adj Sat Flow, veh/h/ln	1900	1863	1863	1863	1863	1900	1863	1863	1863	1863	1863	1863
Adj Flow Rate, veh/h	82	5	12	49	5	3	120	1380	34	38	1701	53
Adj No. of Lanes	0	1	1	1	1	0	1	2	1	1	2	1
Peak Hour Factor	0.92	0.92	0.92	0.92	0.92	0.92	0.92	0.92	0.92	0.92	0.92	0.92
Percent Heavy Veh, %	2	2	2	2	2	2	2	2	2	2	2	2
Cap, veh/h	259	13	219	193	151	91	153	2330	1042	61	2147	960
Arrive On Green	0.15	0.14	0.14	0.14	0.14	0.14	0.09	0.66	0.66	0.03	0.61	0.61
Sat Flow, veh/h	1300	96	1576	1386	1090	654	1774	3539	1583	1774	3539	1583
Grp Volume(v), veh/h	87	0	12	49	0	8	120	1380	34	38	1701	53
Grp Sat Flow(s),veh/h/ln	1396	0	1576	1386	0	1744	1774	1770	1583	1774	1770	1583
Q Serve(g_s), s	4.8	0.0	0.6	3.0	0.0	0.4	5.9	19.4	0.7	1.9	32.4	1.2
Cycle Q Clear(g_c), s	5.2	0.0	0.6	8.2	0.0	0.4	5.9	19.4	0.7	1.9	32.4	1.2
Prop In Lane	0.94		1.00	1.00		0.38	1.00		1.00	1.00		1.00
Lane Grp Cap(c), veh/h	288	0	219	193	0	242	153	2330	1042	61	2147	960
V/C Ratio(X)	0.30	0.00	0.05	0.25	0.00	0.03	0.79	0.59	0.03	0.63	0.79	0.06
Avail Cap(c_a), veh/h	474	0	425	374	0	471	419	2745	1228	239	2387	1068
HCM Platoon Ratio	1.00	1.00	1.00	1.00	1.00	1.00	1.00	1.00	1.00	1.00	1.00	1.00
Upstream Filter(I)	1.00	0.00	1.00	1.00	0.00	1.00	1.00	1.00	1.00	1.00	1.00	1.00
Uniform Delay (d), s/veh	34.9	0.0	33.2	39.0	0.0	33.1	39.9	8.5	5.3	42.4	13.3	7.1
Incr Delay (d2), s/veh	0.6	0.0	0.1	0.7	0.0	0.1	3.4	0.5	0.0	3.9	2.2	0.1
Initial Q Delay(d3),s/veh	0.0	0.0	0.0	0.0	0.0	0.0	0.0	0.0	0.0	0.0	0.0	0.0
%ile BackOfQ(50%),veh/ln	2.0	0.0	0.3	1.2	0.0	0.2	3.0	9.6	0.3	1.0	16.2	0.5
LnGrp Delay(d),s/veh	35.4	0.0	33.3	39.6	0.0	33.2	43.2	9.0	5.3	46.3	15.4	7.2
LnGrp LOS	D		C	D		C	D	A	A	D	B	A
Approach Vol, veh/h		99			57			1534			1792	
Approach Delay, s/veh		35.2			38.7			11.6			15.8	
Approach LOS		D			D			B			B	

Timer	1	2	3	4	5	6	7	8
Assigned Phs	1	2		4	5	6		8
Phs Duration (G+Y+Rc), s	11.6	60.0		17.3	7.0	64.6		17.3
Change Period (Y+Rc), s	4.0	6.0		5.0	4.0	6.0		5.0
Max Green Setting (Gmax), s	21.6	60.0		24.0	12.0	69.0		24.0
Max Q Clear Time (g_c+I1), s	7.9	34.4		10.2	3.9	21.4		7.2
Green Ext Time (p_c), s	0.2	19.6		0.1	0.0	22.7		0.3

Intersection Summary	
HCM 2010 Ctrl Delay	14.9
HCM 2010 LOS	B

Movement	EBL	EBT	EBR	WBL	WBT	WBR	NBL	NBT	NBR	SBL	SBT	SBR
Lane Configurations												
Traffic Volume (veh/h)	280	5	445	15	5	20	290	1345	15	60	1530	170
Future Volume (veh/h)	280	5	445	15	5	20	290	1345	15	60	1530	170
Number	3	8	18	7	4	14	1	6	16	5	2	12
Initial Q (Qb), veh	0	0	0	0	0	0	0	0	0	0	0	0
Ped-Bike Adj(A_pbT)	1.00		1.00	1.00		1.00	1.00		1.00	1.00		1.00
Parking Bus, Adj	1.00	1.00	1.00	1.00	1.00	1.00	1.00	1.00	1.00	1.00	1.00	1.00
Adj Sat Flow, veh/h/ln	1863	1863	1863	1900	1863	1900	1863	1863	1900	1863	1863	1863
Adj Flow Rate, veh/h	308	0	271	16	5	7	315	1462	16	65	1663	156
Adj No. of Lanes	2	0	2	0	1	0	2	2	0	1	2	1
Peak Hour Factor	0.92	0.92	0.92	0.92	0.92	0.92	0.92	0.92	0.92	0.92	0.92	0.92
Percent Heavy Veh, %	2	2	2	2	2	2	2	2	2	2	2	2
Cap, veh/h	460	0	776	44	14	19	421	2332	26	113	2094	1131
Arrive On Green	0.13	0.00	0.12	0.04	0.04	0.02	0.12	0.65	0.64	0.06	0.59	0.59
Sat Flow, veh/h	3548	0	3167	992	310	434	3442	3586	39	1774	3539	1583
Grp Volume(v), veh/h	308	0	271	28	0	0	315	721	757	65	1663	156
Grp Sat Flow(s),veh/h/ln	1774	0	1583	1737	0	0	1721	1770	1856	1774	1770	1583
Q Serve(g_s), s	11.8	0.0	10.1	2.2	0.0	0.0	12.6	34.4	34.5	5.1	51.8	4.5
Cycle Q Clear(g_c), s	11.8	0.0	10.1	2.2	0.0	0.0	12.6	34.4	34.5	5.1	51.8	4.5
Prop In Lane	1.00		1.00	0.57		0.25	1.00		0.02	1.00		1.00
Lane Grp Cap(c), veh/h	460	0	776	77	0	0	421	1151	1207	113	2094	1131
V/C Ratio(X)	0.67	0.00	0.35	0.36	0.00	0.00	0.75	0.63	0.63	0.57	0.79	0.14
Avail Cap(c_a), veh/h	843	0	1118	376	0	0	1395	2400	2517	186	3736	1865
HCM Platoon Ratio	1.00	1.00	1.00	1.00	1.00	1.00	1.00	1.00	1.00	1.00	1.00	1.00
Upstream Filter(I)	1.00	0.00	1.00	1.00	0.00	0.00	1.00	1.00	1.00	1.00	1.00	1.00
Uniform Delay (d), s/veh	59.3	0.0	44.6	66.8	0.0	0.0	60.6	14.8	14.8	65.1	22.5	6.5
Incr Delay (d2), s/veh	0.6	0.0	0.1	1.1	0.0	0.0	1.0	0.8	0.8	1.7	1.0	0.1
Initial Q Delay(d3),s/veh	0.0	0.0	0.0	0.0	0.0	0.0	0.0	0.0	0.0	0.0	0.0	0.0
%ile BackOfQ(50%),veh/ln	5.9	0.0	4.5	1.1	0.0	0.0	6.1	16.9	17.7	2.6	25.5	2.8
LnGrp Delay(d),s/veh	60.0	0.0	44.7	67.8	0.0	0.0	61.7	15.6	15.6	66.8	23.5	6.6
LnGrp LOS	E		D	E			E	B	B	E	C	A
Approach Vol, veh/h		579			28			1793			1884	
Approach Delay, s/veh		52.8			67.8			23.7			23.6	
Approach LOS		D			E			C			C	

Timer	1	2	3	4	5	6	7	8
Assigned Phs	1	2		4	5	6		8
Phs Duration (G+Y+Rc), s	21.5	88.6		10.4	13.1	97.0		22.6
Change Period (Y+Rc), s	6.0	6.0		7.0	6.0	6.0		7.0
Max Green Setting (Gmax), s	56.0	149.0		28.0	13.0	192.0		31.0
Max Q Clear Time (g_c+I1), s	14.6	53.8		4.2	7.1	36.5		13.8
Green Ext Time (p_c), s	0.9	28.9		0.0	0.0	17.4		1.7

Intersection Summary	
HCM 2010 Ctrl Delay	27.9
HCM 2010 LOS	C

Notes

Movement	EBL	EBT	EBR	WBL	WBT	WBR	NBL	NBT	NBR	SBL	SBT	SBR
Lane Configurations												
Traffic Volume (veh/h)	5	0	5	135	5	70	5	1515	90	95	1950	10
Future Volume (veh/h)	5	0	5	135	5	70	5	1515	90	95	1950	10
Number	3	8	18	7	4	14	1	6	16	5	2	12
Initial Q (Qb), veh	0	0	0	0	0	0	0	0	0	0	0	0
Ped-Bike Adj(A_pbT)	1.00		1.00	1.00		1.00	1.00		1.00	1.00		1.00
Parking Bus, Adj	1.00	1.00	1.00	1.00	1.00	1.00	1.00	1.00	1.00	1.00	1.00	1.00
Adj Sat Flow, veh/h/ln	1900	1863	1900	1863	1863	1900	1863	1863	1900	1863	1863	1900
Adj Flow Rate, veh/h	5	0	1	147	5	5	5	1647	95	103	2120	11
Adj No. of Lanes	0	1	0	1	1	0	1	2	0	1	2	0
Peak Hour Factor	0.92	0.92	0.92	0.92	0.92	0.92	0.92	0.92	0.92	0.92	0.92	0.92
Percent Heavy Veh, %	2	2	2	2	2	2	2	2	2	2	2	2
Cap, veh/h	194	5	30	234	107	107	11	2414	138	129	2801	15
Arrive On Green	0.13	0.00	0.12	0.13	0.13	0.12	0.01	0.94	0.93	0.07	0.78	0.77
Sat Flow, veh/h	1140	37	235	1410	856	856	1774	3403	195	1774	3610	19
Grp Volume(v), veh/h	6	0	0	147	0	10	5	852	890	103	1038	1093
Grp Sat Flow(s),veh/h/ln	1412	0	0	1410	0	1712	1774	1770	1828	1774	1770	1859
Q Serve(g_s), s	0.0	0.0	0.0	12.4	0.0	0.7	0.4	9.8	10.3	7.4	41.4	41.5
Cycle Q Clear(g_c), s	0.7	0.0	0.0	13.0	0.0	0.7	0.4	9.8	10.3	7.4	41.4	41.5
Prop In Lane	0.83		0.17	1.00		0.50	1.00		0.11	1.00		0.01
Lane Grp Cap(c), veh/h	228	0	0	234	0	215	11	1256	1297	129	1373	1443
V/C Ratio(X)	0.03	0.00	0.00	0.63	0.00	0.05	0.44	0.68	0.69	0.80	0.76	0.76
Avail Cap(c_a), veh/h	312	0	0	318	0	316	150	1256	1297	150	1373	1443
HCM Platoon Ratio	1.00	1.00	1.00	1.00	1.00	1.00	1.33	1.33	1.33	1.00	1.00	1.00
Upstream Filter(I)	1.00	0.00	0.00	1.00	0.00	1.00	0.76	0.76	0.76	1.00	1.00	1.00
Uniform Delay (d), s/veh	50.0	0.0	0.0	55.3	0.0	50.2	64.2	1.3	1.4	59.3	7.9	7.9
Incr Delay (d2), s/veh	0.0	0.0	0.0	2.8	0.0	0.1	7.5	2.3	2.3	19.3	3.9	3.8
Initial Q Delay(d3),s/veh	0.0	0.0	0.0	0.0	0.0	0.0	0.0	0.0	0.0	0.0	0.0	0.0
%ile BackOfQ(50%),veh/ln	0.2	0.0	0.0	5.3	0.0	0.3	0.2	4.8	5.4	4.3	21.4	22.5
LnGrp Delay(d),s/veh	50.0	0.0	0.0	58.1	0.0	50.3	71.7	3.6	3.6	78.6	11.8	11.7
LnGrp LOS	D			E		D	E	A	A	E	B	B
Approach Vol, veh/h		6			157			1747			2234	
Approach Delay, s/veh		50.0			57.6			3.8			14.8	
Approach LOS		D			E			A			B	

Timer	1	2	3	4	5	6	7	8
Assigned Phs	1	2		4	5	6		8
Phs Duration (G+Y+Rc), s	4.8	104.9		20.3	13.5	96.2		20.3
Change Period (Y+Rc), s	4.0	5.0		5.0	4.0	5.0		5.0
Max Green Setting (Gmax), s	11.0	82.0		23.0	11.0	82.0		23.0
Max Q Clear Time (g_c+I1), s	2.7	43.5		15.0	9.4	12.3		2.7
Green Ext Time (p_c), s	0.0	32.8		0.3	0.0	37.9		0.0

Intersection Summary	
HCM 2010 Ctrl Delay	11.9
HCM 2010 LOS	B

Movement	EBL	EBT	EBR	WBL	WBT	WBR	NBL	NBT	NBR	SBL	SBT	SBR
Lane Configurations												
Traffic Volume (veh/h)	150	5	15	65	5	15	15	1440	15	10	1715	285
Future Volume (veh/h)	150	5	15	65	5	15	15	1440	15	10	1715	285
Number	3	8	18	7	4	14	1	6	16	5	2	12
Initial Q (Qb), veh	0	0	0	0	0	0	0	0	0	0	0	0
Ped-Bike Adj(A_pbT)	1.00		1.00	1.00		1.00	1.00		1.00	1.00		1.00
Parking Bus, Adj	1.00	1.00	1.00	1.00	1.00	1.00	1.00	1.00	1.00	1.00	1.00	1.00
Adj Sat Flow, veh/h/ln	1900	1863	1900	1900	1863	1900	1863	1863	1900	1863	1863	1863
Adj Flow Rate, veh/h	163	5	14	71	5	9	16	1565	15	11	1864	232
Adj No. of Lanes	0	1	0	0	1	0	1	2	0	1	2	1
Peak Hour Factor	0.92	0.92	0.92	0.92	0.92	0.92	0.92	0.92	0.92	0.92	0.92	0.92
Percent Heavy Veh, %	2	2	2	2	2	2	2	2	2	2	2	2
Cap, veh/h	244	6	16	244	19	25	19	2719	26	13	2668	1193
Arrive On Green	0.14	0.14	0.14	0.14	0.14	0.14	0.01	0.76	0.75	0.01	0.75	0.75
Sat Flow, veh/h	1338	41	115	1347	129	175	1774	3592	34	1774	3539	1582
Grp Volume(v), veh/h	182	0	0	85	0	0	16	771	809	11	1864	232
Grp Sat Flow(s),veh/h/ln	1494	0	0	1651	0	0	1774	1770	1857	1774	1770	1582
Q Serve(g_s), s	9.4	0.0	0.0	0.0	0.0	0.0	1.2	24.4	24.4	0.8	35.6	5.5
Cycle Q Clear(g_c), s	15.2	0.0	0.0	5.8	0.0	0.0	1.2	24.4	24.4	0.8	35.6	5.5
Prop In Lane	0.90		0.08	0.84		0.11	1.00		0.02	1.00		1.00
Lane Grp Cap(c), veh/h	267	0	0	287	0	0	19	1339	1405	13	2668	1193
V/C Ratio(X)	0.68	0.00	0.00	0.30	0.00	0.00	0.84	0.58	0.58	0.82	0.70	0.19
Avail Cap(c_a), veh/h	347	0	0	368	0	0	109	1339	1405	109	2668	1193
HCM Platoon Ratio	1.00	1.00	1.00	1.00	1.00	1.00	1.00	1.00	1.00	1.00	1.00	1.00
Upstream Filter(I)	1.00	0.00	0.00	1.00	0.00	0.00	0.68	0.68	0.68	0.54	0.54	0.54
Uniform Delay (d), s/veh	54.0	0.0	0.0	50.2	0.0	0.0	64.2	6.8	6.8	64.4	8.3	4.6
Incr Delay (d2), s/veh	3.6	0.0	0.0	0.6	0.0	0.0	21.1	1.2	1.2	21.1	0.8	0.2
Initial Q Delay(d3),s/veh	0.0	0.0	0.0	0.0	0.0	0.0	0.0	0.0	0.0	0.0	0.0	0.0
%ile BackOfQ(50%),veh/ln	6.6	0.0	0.0	2.8	0.0	0.0	0.7	12.2	12.8	0.5	17.4	2.5
LnGrp Delay(d),s/veh	57.6	0.0	0.0	50.8	0.0	0.0	85.3	8.0	8.0	85.5	9.2	4.8
LnGrp LOS	E			D			F	A	A	F	A	A
Approach Vol, veh/h		182			85			1596			2107	
Approach Delay, s/veh		57.6			50.8			8.8			9.1	
Approach LOS		E			D			A			A	

Timer	1	2	3	4	5	6	7	8
Assigned Phs	1	2		4	5	6		8
Phs Duration (G+Y+Rc), s	5.4	102.0		22.6	5.0	102.4		22.6
Change Period (Y+Rc), s	4.0	5.0		5.0	4.0	5.0		5.0
Max Green Setting (Gmax), s	8.0	83.0		25.0	8.0	83.0		25.0
Max Q Clear Time (g_c+I1), s	3.2	37.6		7.8	2.8	26.4		17.2
Green Ext Time (p_c), s	0.0	39.8		0.2	0.0	37.3		0.4

Intersection Summary	
HCM 2010 Ctrl Delay	12.1
HCM 2010 LOS	B

Movement	EBL	EBT	EBR	WBL	WBT	WBR	NBL	NBT	NBR	SBL	SBT	SBR
Lane Configurations												
Traffic Volume (veh/h)	210	20	50	90	20	20	60	1450	60	15	1715	140
Future Volume (veh/h)	210	20	50	90	20	20	60	1450	60	15	1715	140
Number	3	8	18	7	4	14	1	6	16	5	2	12
Initial Q (Qb), veh	0	0	0	0	0	0	0	0	0	0	0	0
Ped-Bike Adj(A_pbT)	1.00		1.00	1.00		1.00	1.00		0.99	1.00		1.00
Parking Bus, Adj	1.00	1.00	1.00	1.00	1.00	1.00	1.00	1.00	1.00	1.00	1.00	1.00
Adj Sat Flow, veh/h/ln	1900	1863	1863	1863	1863	1900	1863	1863	1900	1863	1863	1900
Adj Flow Rate, veh/h	228	22	12	98	22	4	65	1576	63	16	1864	148
Adj No. of Lanes	0	1	1	1	1	0	1	2	0	1	2	0
Peak Hour Factor	0.92	0.92	0.92	0.92	0.92	0.92	0.92	0.92	0.92	0.92	0.92	0.92
Percent Heavy Veh, %	2	2	2	2	2	2	2	2	2	2	2	2
Cap, veh/h	308	25	332	404	323	59	83	2381	95	19	2162	169
Arrive On Green	0.21	0.21	0.21	0.21	0.21	0.20	0.05	0.69	0.68	0.01	0.86	0.85
Sat Flow, veh/h	1212	117	1577	1381	1533	279	1774	3469	138	1774	3325	261
Grp Volume(v), veh/h	250	0	12	98	0	26	65	801	838	16	980	1032
Grp Sat Flow(s),veh/h/ln	1329	0	1577	1381	0	1812	1774	1770	1837	1774	1770	1816
Q Serve(g_s), s	22.5	0.0	0.8	0.0	0.0	1.5	4.7	33.8	34.2	1.2	37.0	41.1
Cycle Q Clear(g_c), s	24.0	0.0	0.8	6.3	0.0	1.5	4.7	33.8	34.2	1.2	37.0	41.1
Prop In Lane	0.91		1.00	1.00		0.15	1.00		0.08	1.00		0.14
Lane Grp Cap(c), veh/h	333	0	332	404	0	382	83	1214	1261	19	1151	1181
V/C Ratio(X)	0.75	0.00	0.04	0.24	0.00	0.07	0.78	0.66	0.66	0.84	0.85	0.87
Avail Cap(c_a), veh/h	372	0	376	443	0	432	109	1214	1261	109	1151	1181
HCM Platoon Ratio	1.00	1.00	1.00	1.00	1.00	1.00	1.00	1.00	1.00	1.33	1.33	1.33
Upstream Filter(I)	1.00	0.00	1.00	1.00	0.00	1.00	0.51	0.51	0.51	0.62	0.62	0.62
Uniform Delay (d), s/veh	50.7	0.0	40.8	43.0	0.0	41.1	61.3	11.7	11.8	64.0	5.6	5.9
Incr Delay (d2), s/veh	7.4	0.0	0.0	0.3	0.0	0.1	9.3	1.4	1.4	19.7	5.2	5.9
Initial Q Delay(d3),s/veh	0.0	0.0	0.0	0.0	0.0	0.0	0.0	0.0	0.0	0.0	0.0	0.0
%ile BackOfQ(50%),veh/ln	9.4	0.0	0.3	3.0	0.0	0.8	2.5	16.7	17.7	0.7	18.6	21.3
LnGrp Delay(d),s/veh	58.1	0.0	40.8	43.3	0.0	41.2	70.6	13.1	13.2	83.7	10.8	11.9
LnGrp LOS	E		D	D		D	E	B	B	F	B	B
Approach Vol, veh/h		262			124			1704			2028	
Approach Delay, s/veh		57.3			42.9			15.4			11.9	
Approach LOS		E			D			B			B	

Timer	1	2	3	4	5	6	7	8
Assigned Phs	1	2		4	5	6		8
Phs Duration (G+Y+Rc), s	10.1	88.5		31.4	5.4	93.2		31.4
Change Period (Y+Rc), s	4.0	5.0		5.0	4.0	5.0		5.0
Max Green Setting (Gmax), s	8.0	78.0		30.0	8.0	78.0		30.0
Max Q Clear Time (g_c+I1), s	10.7	43.1		8.3	3.2	36.2		26.0
Green Ext Time (p_c), s	0.0	28.8		0.4	0.0	25.7		0.4

Intersection Summary	
HCM 2010 Ctrl Delay	17.2
HCM 2010 LOS	B

Notes

Movement	EBL	EBT	EBR	WBL	WBT	WBR	NBL	NBT	NBR	SBL	SBT	SBR
Lane Configurations												
Traffic Volume (veh/h)	65	150	90	145	130	715	80	785	195	610	1015	105
Future Volume (veh/h)	65	150	90	145	130	715	80	785	195	610	1015	105
Number	7	4	14	3	8	18	1	6	16	5	2	12
Initial Q (Qb), veh	0	0	0	0	0	0	0	0	0	0	0	0
Ped-Bike Adj(A_pbT)	0.98		0.96	1.00		0.97	1.00		0.99	1.00		1.00
Parking Bus, Adj	1.00	1.00	1.00	1.00	1.00	1.00	1.00	1.00	1.00	1.00	1.00	1.00
Adj Sat Flow, veh/h/ln	1900	1863	1863	1863	1863	1863	1863	1863	1863	1863	1863	1900
Adj Flow Rate, veh/h	71	163	11	158	141	392	87	853	125	663	1103	109
Adj No. of Lanes	0	1	1	1	1	1	1	2	1	2	2	0
Peak Hour Factor	0.92	0.92	0.92	0.92	0.92	0.92	0.92	0.92	0.92	0.92	0.92	0.92
Percent Heavy Veh, %	2	2	2	2	2	2	2	2	2	2	2	2
Cap, veh/h	107	192	281	250	576	477	110	1354	597	743	1746	172
Arrive On Green	0.19	0.19	0.19	0.09	0.31	0.31	0.06	0.38	0.38	0.14	0.36	0.35
Sat Flow, veh/h	379	1032	1514	1774	1863	1542	1774	3539	1561	3442	3254	321
Grp Volume(v), veh/h	234	0	11	158	141	392	87	853	125	663	599	613
Grp Sat Flow(s),veh/h/ln	1411	0	1514	1774	1863	1542	1774	1770	1561	1721	1770	1806
Q Serve(g_s), s	18.8	0.0	0.8	9.0	7.4	30.6	6.3	25.5	7.0	24.6	36.5	36.6
Cycle Q Clear(g_c), s	20.9	0.0	0.8	9.0	7.4	30.6	6.3	25.5	7.0	24.6	36.5	36.6
Prop In Lane	0.30		1.00	1.00		1.00	1.00		1.00	1.00		0.18
Lane Grp Cap(c), veh/h	298	0	281	250	576	477	110	1354	597	743	950	969
V/C Ratio(X)	0.78	0.00	0.04	0.63	0.24	0.82	0.79	0.63	0.21	0.89	0.63	0.63
Avail Cap(c_a), veh/h	318	0	303	276	630	522	328	1354	597	953	950	969
HCM Platoon Ratio	1.00	1.00	1.00	1.00	1.00	1.00	1.00	1.00	1.00	0.67	0.67	0.67
Upstream Filter(I)	1.00	0.00	1.00	1.00	1.00	1.00	0.79	0.79	0.79	0.39	0.39	0.39
Uniform Delay (d), s/veh	51.3	0.0	43.4	37.9	33.6	41.6	60.2	32.6	26.9	54.1	31.0	31.1
Incr Delay (d2), s/veh	11.5	0.0	0.1	4.0	0.2	9.5	3.8	1.8	0.6	3.2	1.2	1.2
Initial Q Delay(d3),s/veh	0.0	0.0	0.0	0.0	0.0	0.0	0.0	0.0	0.0	0.0	0.0	0.0
%ile BackOfQ(50%),veh/ln	9.1	0.0	0.3	4.6	3.8	14.3	3.2	12.8	3.1	12.1	18.2	18.6
LnGrp Delay(d),s/veh	62.8	0.0	43.5	41.9	33.8	51.1	64.0	34.4	27.6	57.3	32.2	32.3
LnGrp LOS	E		D	D	C	D	E	C	C	E	C	C
Approach Vol, veh/h		245			691			1065			1875	
Approach Delay, s/veh		61.9			45.5			36.0			41.1	
Approach LOS		E			D			D			D	

Timer	1	2	3	4	5	6	7	8
Assigned Phs	1	2	3	4	5	6		8
Phs Duration (G+Y+Rc), s	12.0	73.8	16.0	28.2	32.1	53.7		44.2
Change Period (Y+Rc), s	4.0	5.0	5.0	5.0	4.0	5.0		5.0
Max Green Setting (Gmax), s	24.0	49.0	13.0	25.0	36.0	37.0		43.0
Max Q Clear Time (g_c+I1), s	9.3	38.6	11.0	22.9	26.6	27.5		32.6
Green Ext Time (p_c), s	0.1	7.0	0.1	0.2	1.5	5.5		1.9

Intersection Summary	
HCM 2010 Ctrl Delay	41.8
HCM 2010 LOS	D

Notes

Intersection	
Int Delay, s/veh	0.9

Movement	WBL	WBR	NBT	NBR	SBL	SBT
Lane Configurations		↱	↑	↱		↑
Traffic Vol, veh/h	0	95	670	110	0	885
Future Vol, veh/h	0	95	670	110	0	885
Conflicting Peds, #/hr	0	0	0	0	0	0
Sign Control	Stop	Stop	Free	Free	Free	Free
RT Channelized	-	None	-	None	-	None
Storage Length	-	0	-	0	-	-
Veh in Median Storage, #	0	-	0	-	-	0
Grade, %	0	-	0	-	-	0
Peak Hour Factor	92	92	92	92	92	92
Heavy Vehicles, %	2	2	2	2	2	2
Mvmt Flow	0	103	728	120	0	962

Major/Minor	Minor1		Major1		Major2	
Conflicting Flow All	-	728	0	0	-	-
Stage 1	-	-	-	-	-	-
Stage 2	-	-	-	-	-	-
Critical Hdwy	-	6.22	-	-	-	-
Critical Hdwy Stg 1	-	-	-	-	-	-
Critical Hdwy Stg 2	-	-	-	-	-	-
Follow-up Hdwy	-	3.318	-	-	-	-
Pot Cap-1 Maneuver	0	423	-	-	0	-
Stage 1	0	-	-	-	0	-
Stage 2	0	-	-	-	0	-
Platoon blocked, %			-	-		-
Mov Cap-1 Maneuver	-	423	-	-	-	-
Mov Cap-2 Maneuver	-	-	-	-	-	-
Stage 1	-	-	-	-	-	-
Stage 2	-	-	-	-	-	-

Approach	WB	NB	SB
HCM Control Delay, s	16.2	0	0
HCM LOS	C		

Minor Lane/Major Mvmt	NBT	NBR	WBLn1	SBT
Capacity (veh/h)	-	-	423	-
HCM Lane V/C Ratio	-	-	0.244	-
HCM Control Delay (s)	-	-	16.2	-
HCM Lane LOS	-	-	C	-
HCM 95th %tile Q(veh)	-	-	0.9	-

Intersection	
Int Delay, s/veh	1.7

Movement	WBL	WBR	NBT	NBR	SBL	SBT
Lane Configurations						
Traffic Vol, veh/h	60	35	880	75	40	945
Future Vol, veh/h	60	35	880	75	40	945
Conflicting Peds, #/hr	0	0	0	0	0	0
Sign Control	Stop	Stop	Free	Free	Free	Free
RT Channelized	-	None	-	None	-	None
Storage Length	0	100	-	100	100	-
Veh in Median Storage, #	0	-	0	-	-	0
Grade, %	0	-	0	-	-	0
Peak Hour Factor	92	92	92	92	92	92
Heavy Vehicles, %	2	2	2	2	2	2
Mvmt Flow	65	38	957	82	43	1027

Major/Minor	Minor1		Major1		Major2	
Conflicting Flow All	2070	957	0	0	1039	0
Stage 1	957	-	-	-	-	-
Stage 2	1113	-	-	-	-	-
Critical Hdwy	6.42	6.22	-	-	4.12	-
Critical Hdwy Stg 1	5.42	-	-	-	-	-
Critical Hdwy Stg 2	5.42	-	-	-	-	-
Follow-up Hdwy	3.518	3.318	-	-	2.218	-
Pot Cap-1 Maneuver	~ 59	313	-	-	669	-
Stage 1	373	-	-	-	-	-
Stage 2	314	-	-	-	-	-
Platoon blocked, %			-	-		-
Mov Cap-1 Maneuver	~ 55	313	-	-	669	-
Mov Cap-2 Maneuver	164	-	-	-	-	-
Stage 1	349	-	-	-	-	-
Stage 2	314	-	-	-	-	-

Approach	WB	NB	SB
HCM Control Delay, s	32.4	0	0.4
HCM LOS	D		

Minor Lane/Major Mvmt	NBT	NBR	WBLn1	WBLn2	SBL	SBT
Capacity (veh/h)	-	-	164	313	669	-
HCM Lane V/C Ratio	-	-	0.398	0.122	0.065	-
HCM Control Delay (s)	-	-	40.7	18.1	10.8	-
HCM Lane LOS	-	-	E	C	B	-
HCM 95th %tile Q(veh)	-	-	1.7	0.4	0.2	-

Notes

~: Volume exceeds capacity $: Delay exceeds 300s +: Computation Not Defined *: All major volume in platoon

Intersection	
Int Delay, s/veh	11.1

Movement	EBL	EBT	EBR	WBL	WBT	WBR	NBL	NBT	NBR	SBL	SBT	SBR
Lane Configurations												
Traffic Vol, veh/h	190	105	125	5	95	5	115	5	5	5	5	180
Future Vol, veh/h	190	105	125	5	95	5	115	5	5	5	5	180
Conflicting Peds, #/hr	0	0	0	0	0	0	0	0	0	0	0	0
Sign Control	Free	Free	Free	Free	Free	Free	Stop	Stop	Stop	Stop	Stop	Stop
RT Channelized	-	-	None	-	-	None	-	-	None	-	-	None
Storage Length	100	-	-	100	-	-	-	-	-	-	-	-
Veh in Median Storage, #	-	0	-	-	0	-	-	0	-	-	0	-
Grade, %	-	0	-	-	0	-	-	0	-	-	0	-
Peak Hour Factor	92	92	92	92	92	92	92	92	92	92	92	92
Heavy Vehicles, %	2	2	2	2	2	2	2	2	2	2	2	2
Mvmt Flow	207	114	136	5	103	5	125	5	5	5	5	196

Major/Minor	Major1			Major2			Minor1			Minor2		
Conflicting Flow All	108	0	0	250	0	0	812	714	182	717	780	106
Stage 1	-	-	-	-	-	-	596	596	-	116	116	-
Stage 2	-	-	-	-	-	-	216	118	-	601	664	-
Critical Hdwy	4.12	-	-	4.12	-	-	7.12	6.52	6.22	7.12	6.52	6.22
Critical Hdwy Stg 1	-	-	-	-	-	-	6.12	5.52	-	6.12	5.52	-
Critical Hdwy Stg 2	-	-	-	-	-	-	6.12	5.52	-	6.12	5.52	-
Follow-up Hdwy	2.218	-	-	2.218	-	-	3.518	4.018	3.318	3.518	4.018	3.318
Pot Cap-1 Maneuver	1483	-	-	1316	-	-	298	357	861	345	327	948
Stage 1	-	-	-	-	-	-	490	492	-	889	800	-
Stage 2	-	-	-	-	-	-	786	798	-	487	458	-
Platoon blocked, %		-	-		-	-						
Mov Cap-1 Maneuver	1483	-	-	1316	-	-	207	306	861	301	280	948
Mov Cap-2 Maneuver	-	-	-	-	-	-	207	306	-	301	280	-
Stage 1	-	-	-	-	-	-	421	423	-	765	797	-
Stage 2	-	-	-	-	-	-	617	795	-	411	394	-

Approach	EB	WB	NB	SB
HCM Control Delay, s	3.5	0.4	46.3	10.6
HCM LOS			E	B

Minor Lane/Major Mvmt	NBLn1	EBL	EBT	EBR	WBL	WBT	WBR	SBLn1
Capacity (veh/h)	216	1483	-	-	1316	-	-	847
HCM Lane V/C Ratio	0.629	0.139	-	-	0.004	-	-	0.244
HCM Control Delay (s)	46.3	7.8	-	-	7.7	-	-	10.6
HCM Lane LOS	E	A	-	-	A	-	-	B
HCM 95th %tile Q(veh)	3.7	0.5	-	-	0	-	-	1

Intersection	
Int Delay, s/veh	4.8

Movement	EBL	EBT	EBR	WBL	WBT	WBR	NBL	NBT	NBR	SBL	SBT	SBR
Lane Configurations												
Traffic Vol, veh/h	25	20	65	5	25	5	55	5	5	5	5	20
Future Vol, veh/h	25	20	65	5	25	5	55	5	5	5	5	20
Conflicting Peds, #/hr	0	0	0	0	0	0	0	0	0	0	0	0
Sign Control	Free	Free	Free	Free	Free	Free	Stop	Stop	Stop	Stop	Stop	Stop
RT Channelized	-	-	None	-	-	None	-	-	None	-	-	None
Storage Length	-	-	-	-	-	-	-	-	-	-	-	-
Veh in Median Storage, #	-	0	-	-	0	-	-	0	-	-	0	-
Grade, %	-	0	-	-	0	-	-	0	-	-	0	-
Peak Hour Factor	92	92	92	92	92	92	92	92	92	92	92	92
Heavy Vehicles, %	2	2	2	2	2	2	2	2	2	2	2	2
Mvmt Flow	27	22	71	5	27	5	60	5	5	5	5	22

Major/Minor	Major1			Major2			Minor1			Minor2		
Conflicting Flow All	32	0	0	93	0	0	165	154	58	157	187	30
Stage 1	-	-	-	-	-	-	112	112	-	40	40	-
Stage 2	-	-	-	-	-	-	53	42	-	117	147	-
Critical Hdwy	4.12	-	-	4.12	-	-	7.12	6.52	6.22	7.12	6.52	6.22
Critical Hdwy Stg 1	-	-	-	-	-	-	6.12	5.52	-	6.12	5.52	-
Critical Hdwy Stg 2	-	-	-	-	-	-	6.12	5.52	-	6.12	5.52	-
Follow-up Hdwy	2.218	-	-	2.218	-	-	3.518	4.018	3.318	3.518	4.018	3.318
Pot Cap-1 Maneuver	1580	-	-	1501	-	-	800	738	1008	809	708	1044
Stage 1	-	-	-	-	-	-	893	803	-	975	862	-
Stage 2	-	-	-	-	-	-	960	860	-	888	775	-
Platoon blocked, %		-	-		-	-						
Mov Cap-1 Maneuver	1580	-	-	1501	-	-	766	723	1008	787	693	1044
Mov Cap-2 Maneuver	-	-	-	-	-	-	766	723	-	787	693	-
Stage 1	-	-	-	-	-	-	877	789	-	957	859	-
Stage 2	-	-	-	-	-	-	931	857	-	861	761	-

Approach	EB	WB	NB	SB
HCM Control Delay, s	1.7	1.1	10.1	9.1
HCM LOS			B	A

Minor Lane/Major Mvmt	NBLn1	EBL	EBT	EBR	WBL	WBT	WBR	SBLn1
Capacity (veh/h)	777	1580	-	-	1501	-	-	917
HCM Lane V/C Ratio	0.091	0.017	-	-	0.004	-	-	0.036
HCM Control Delay (s)	10.1	7.3	0	-	7.4	0	-	9.1
HCM Lane LOS	B	A	A	-	A	A	-	A
HCM 95th %tile Q(veh)	0.3	0.1	-	-	0	-	-	0.1

Intersection	
Int Delay, s/veh	2.1

Movement	EBT	EBR	WBL	WBT	NBL	NBR
Lane Configurations						
Traffic Vol, veh/h	60	55	5	55	40	5
Future Vol, veh/h	60	55	5	55	40	5
Conflicting Peds, #/hr	0	0	0	0	0	0
Sign Control	Free	Free	Free	Free	Stop	Stop
RT Channelized	-	None	-	None	-	None
Storage Length	-	-	-	-	0	-
Veh in Median Storage, #	0	-	-	0	0	-
Grade, %	0	-	-	0	0	-
Peak Hour Factor	92	92	92	92	92	92
Heavy Vehicles, %	2	2	2	2	2	2
Mvmt Flow	65	60	5	60	43	5

Major/Minor	Major1		Major2		Minor1	
Conflicting Flow All	0	0	125	0	165	95
Stage 1	-	-	-	-	95	-
Stage 2	-	-	-	-	70	-
Critical Hdwy	-	-	4.12	-	6.42	6.22
Critical Hdwy Stg 1	-	-	-	-	5.42	-
Critical Hdwy Stg 2	-	-	-	-	5.42	-
Follow-up Hdwy	-	-	2.218	-	3.518	3.318
Pot Cap-1 Maneuver	-	-	1462	-	826	962
Stage 1	-	-	-	-	929	-
Stage 2	-	-	-	-	953	-
Platoon blocked, %	-	-		-		
Mov Cap-1 Maneuver	-	-	1462	-	823	962
Mov Cap-2 Maneuver	-	-	-	-	823	-
Stage 1	-	-	-	-	925	-
Stage 2	-	-	-	-	953	-

Approach	EB	WB	NB
HCM Control Delay, s	0	0.6	9.6
HCM LOS			A

Minor Lane/Major Mvmt	NBLn1	EBT	EBR	WBL	WBT
Capacity (veh/h)	836	-	-	1462	-
HCM Lane V/C Ratio	0.059	-	-	0.004	-
HCM Control Delay (s)	9.6	-	-	7.5	0
HCM Lane LOS	A	-	-	A	A
HCM 95th %tile Q(veh)	0.2	-	-	0	-

Intersection	
Intersection Delay, s/veh	3.7
Intersection LOS	A

Approach	EB	WB	NB
Entry Lanes	1	1	1
Conflicting Circle Lanes	1	1	1
Adj Approach Flow, veh/h	71	38	32
Demand Flow Rate, veh/h	73	39	33
Vehicles Circulating, veh/h	5	28	39
Vehicles Exiting, veh/h	62	44	39
Follow-Up Headway, s	3.186	3.186	3.186
Ped Vol Crossing Leg, #/h	0	0	0
Ped Cap Adj	1.000	1.000	1.000
Approach Delay, s/veh	3.8	3.6	3.7
Approach LOS	A	A	A

Lane	Left	Left	Left
Designated Moves	TR	LT	LR
Assumed Moves	TR	LT	LR
RT Channelized			
Lane Util	1.000	1.000	1.000
Critical Headway, s	5.193	5.193	5.193
Entry Flow, veh/h	73	39	33
Cap Entry Lane, veh/h	1124	1099	1087
Entry HV Adj Factor	0.976	0.983	0.970
Flow Entry, veh/h	71	38	32
Cap Entry, veh/h	1097	1080	1054
V/C Ratio	0.065	0.035	0.030
Control Delay, s/veh	3.8	3.6	3.7
LOS	A	A	A
95th %tile Queue, veh	0	0	0

APPENDIX C

LEVEL OF SERVICE CALCULATIONS

- Future Year 2027 Scenario 4 AM Peak

Movement	EBL	EBT	EBR	WBL	WBT	WBR	NBL	NBT	NBR	SBL	SBT	SBR
Lane Configurations												
Traffic Volume (veh/h)	50	45	310	95	50	20	255	290	115	10	210	30
Future Volume (veh/h)	50	45	310	95	50	20	255	290	115	10	210	30
Number	7	4	14	3	8	18	5	2	12	1	6	16
Initial Q (Qb), veh	0	0	0	0	0	0	0	0	0	0	0	0
Ped-Bike Adj(A_pbT)	0.99		0.99	0.99		0.99	1.00		1.00	1.00		1.00
Parking Bus, Adj	1.00	1.00	1.00	1.00	1.00	1.00	1.00	1.00	1.00	1.00	1.00	1.00
Adj Sat Flow, veh/h/ln	1900	1863	1863	1863	1863	1900	1863	1863	1863	1863	1863	1863
Adj Flow Rate, veh/h	54	49	40	103	54	10	277	315	63	11	228	9
Adj No. of Lanes	0	1	1	1	1	0	1	1	1	1	1	1
Peak Hour Factor	0.92	0.92	0.92	0.92	0.92	0.92	0.92	0.92	0.92	0.92	0.92	0.92
Percent Heavy Veh, %	2	2	2	2	2	2	2	2	2	2	2	2
Cap, veh/h	235	169	264	326	257	48	364	815	693	15	449	382
Arrive On Green	0.17	0.17	0.17	0.17	0.17	0.17	0.21	0.44	0.44	0.01	0.24	0.24
Sat Flow, veh/h	611	1002	1569	1294	1527	283	1774	1863	1583	1774	1863	1583
Grp Volume(v), veh/h	103	0	40	103	0	64	277	315	63	11	228	9
Grp Sat Flow(s),veh/h/ln	1613	0	1569	1294	0	1810	1774	1863	1583	1774	1863	1583
Q Serve(g_s), s	0.4	0.0	0.9	3.2	0.0	1.3	6.1	4.8	1.0	0.3	4.4	0.2
Cycle Q Clear(g_c), s	2.1	0.0	0.9	5.3	0.0	1.3	6.1	4.8	1.0	0.3	4.4	0.2
Prop In Lane	0.52		1.00	1.00		0.16	1.00		1.00	1.00		1.00
Lane Grp Cap(c), veh/h	404	0	264	326	0	305	364	815	693	15	449	382
V/C Ratio(X)	0.26	0.00	0.15	0.32	0.00	0.21	0.76	0.39	0.09	0.72	0.51	0.02
Avail Cap(c_a), veh/h	1033	0	908	856	0	1047	1282	3546	3014	641	2873	2442
HCM Platoon Ratio	1.00	1.00	1.00	1.00	1.00	1.00	1.00	1.00	1.00	1.00	1.00	1.00
Upstream Filter(I)	1.00	0.00	1.00	1.00	0.00	1.00	1.00	1.00	1.00	1.00	1.00	1.00
Uniform Delay (d), s/veh	15.2	0.0	14.7	17.5	0.0	14.9	15.5	7.9	6.8	20.5	13.6	12.0
Incr Delay (d2), s/veh	0.3	0.0	0.3	0.6	0.0	0.3	3.3	0.6	0.1	47.6	1.9	0.1
Initial Q Delay(d3),s/veh	0.0	0.0	0.0	0.0	0.0	0.0	0.0	0.0	0.0	0.0	0.0	0.0
%ile BackOfQ(50%),veh/ln	1.1	0.0	0.4	1.2	0.0	0.7	3.3	2.5	0.4	0.3	2.5	0.1
LnGrp Delay(d),s/veh	15.5	0.0	15.0	18.1	0.0	15.2	18.8	8.5	7.0	68.1	15.5	12.1
LnGrp LOS	B		B	B		B	B	A	A	E	B	B
Approach Vol, veh/h		143			167			655			248	
Approach Delay, s/veh		15.4			17.0			12.7			17.7	
Approach LOS		B			B			B			B	

Timer	1	2	3	4	5	6	7	8
Assigned Phs	1	2		4	5	6		8
Phs Duration (G+Y+Rc), s	5.4	24.2		12.0	13.5	16.0		12.0
Change Period (Y+Rc), s	5.0	6.0		5.0	5.0	6.0		5.0
Max Green Setting (Gmax), s	15.0	79.0		24.0	30.0	64.0		24.0
Max Q Clear Time (g_c+I1), s	2.3	6.8		4.1	8.1	6.4		7.3
Green Ext Time (p_c), s	0.0	4.8		0.6	0.8	3.0		0.6

Intersection Summary	
HCM 2010 Ctrl Delay	14.7
HCM 2010 LOS	B

Movement	EBL	EBT	EBR	WBL	WBT	WBR	NBL	NBT	NBR	SBL	SBT	SBR
Lane Configurations												
Traffic Volume (veh/h)	60	5	190	95	20	15	160	630	20	10	620	65
Future Volume (veh/h)	60	5	190	95	20	15	160	630	20	10	620	65
Number	7	4	14	3	8	18	5	2	12	1	6	16
Initial Q (Qb), veh	0	0	0	0	0	0	0	0	0	0	0	0
Ped-Bike Adj(A_pbT)	0.98		0.97	0.98		0.97	1.00		1.00	1.00		0.99
Parking Bus, Adj	1.00	1.00	1.00	1.00	1.00	1.00	1.00	1.00	1.00	1.00	1.00	1.00
Adj Sat Flow, veh/h/ln	1900	1863	1863	1863	1863	1900	1863	1863	1863	1863	1863	1863
Adj Flow Rate, veh/h	65	5	19	103	22	2	174	685	0	11	674	31
Adj No. of Lanes	0	1	1	1	1	0	1	1	1	1	1	1
Peak Hour Factor	0.92	0.92	0.92	0.92	0.92	0.92	0.92	0.92	0.92	0.92	0.92	0.92
Percent Heavy Veh, %	2	2	2	2	2	2	2	2	2	2	2	2
Cap, veh/h	358	23	305	322	331	30	370	968	823	319	820	692
Arrive On Green	0.20	0.20	0.20	0.20	0.20	0.20	0.09	0.52	0.00	0.01	0.44	0.44
Sat Flow, veh/h	1208	118	1543	1352	1679	153	1774	1863	1583	1774	1863	1573
Grp Volume(v), veh/h	70	0	19	103	0	24	174	685	0	11	674	31
Grp Sat Flow(s),veh/h/ln	1326	0	1543	1352	0	1831	1774	1863	1583	1774	1863	1573
Q Serve(g_s), s	2.3	0.0	0.6	4.1	0.0	0.6	2.8	16.3	0.0	0.2	18.5	0.7
Cycle Q Clear(g_c), s	2.9	0.0	0.6	7.0	0.0	0.6	2.8	16.3	0.0	0.2	18.5	0.7
Prop In Lane	0.93		1.00	1.00		0.08	1.00		1.00	1.00		1.00
Lane Grp Cap(c), veh/h	381	0	305	322	0	362	370	968	823	319	820	692
V/C Ratio(X)	0.18	0.00	0.06	0.32	0.00	0.07	0.47	0.71	0.00	0.03	0.82	0.04
Avail Cap(c_a), veh/h	700	0	662	635	0	786	671	1630	1386	761	1630	1376
HCM Platoon Ratio	1.00	1.00	1.00	1.00	1.00	1.00	1.00	1.00	1.00	1.00	1.00	1.00
Upstream Filter(I)	1.00	0.00	1.00	1.00	0.00	1.00	1.00	1.00	0.00	1.00	1.00	1.00
Uniform Delay (d), s/veh	20.1	0.0	19.0	23.0	0.0	19.0	10.9	10.6	0.0	10.1	14.3	9.3
Incr Delay (d2), s/veh	0.2	0.0	0.1	0.6	0.0	0.1	0.9	1.0	0.0	0.0	2.1	0.0
Initial Q Delay(d3),s/veh	0.0	0.0	0.0	0.0	0.0	0.0	0.0	0.0	0.0	0.0	0.0	0.0
%ile BackOfQ(50%),veh/ln	1.0	0.0	0.3	1.6	0.0	0.3	1.4	8.4	0.0	0.1	9.8	0.3
LnGrp Delay(d),s/veh	20.3	0.0	19.1	23.5	0.0	19.1	11.8	11.6	0.0	10.1	16.5	9.3
LnGrp LOS	C		B	C		B	B	B		B	B	A
Approach Vol, veh/h		89			127			859			716	
Approach Delay, s/veh		20.1			22.7			11.7			16.1	
Approach LOS		C			C			B			B	

Timer	1	2	3	4	5	6	7	8
Assigned Phs	1	2		4	5	6		8
Phs Duration (G+Y+Rc), s	5.5	36.3		16.5	10.1	31.6		16.5
Change Period (Y+Rc), s	5.0	6.0		5.0	5.0	6.0		5.0
Max Green Setting (Gmax), s	15.0	51.0		25.0	15.0	51.0		25.0
Max Q Clear Time (g_c+I1), s	2.2	18.3		4.9	4.8	20.5		9.0
Green Ext Time (p_c), s	0.0	5.2		0.4	0.3	5.1		0.3

Intersection Summary	
HCM 2010 Ctrl Delay	14.6
HCM 2010 LOS	B

Notes

Movement	EBL	EBT	EBR	WBL	WBT	WBR	NBL	NBT	NBR	SBL	SBT	SBR
Lane Configurations												
Traffic Volume (veh/h)	45	20	125	155	45	150	60	610	130	135	715	30
Future Volume (veh/h)	45	20	125	155	45	150	60	610	130	135	715	30
Number	7	4	14	3	8	18	5	2	12	1	6	16
Initial Q (Qb), veh	0	0	0	0	0	0	0	0	0	0	0	0
Ped-Bike Adj(A_pbT)	1.00		0.98	1.00		0.99	1.00		1.00	1.00		1.00
Parking Bus, Adj	1.00	1.00	1.00	1.00	1.00	1.00	1.00	1.00	1.00	1.00	1.00	1.00
Adj Sat Flow, veh/h/ln	1863	1863	1900	1863	1863	1863	1863	1863	1863	1863	1863	1863
Adj Flow Rate, veh/h	49	22	6	168	49	20	65	663	89	147	777	16
Adj No. of Lanes	1	1	0	1	1	1	1	1	1	1	1	1
Peak Hour Factor	0.92	0.92	0.92	0.92	0.92	0.92	0.92	0.92	0.92	0.92	0.92	0.92
Percent Heavy Veh, %	2	2	2	2	2	2	2	2	2	2	2	2
Cap, veh/h	63	175	48	208	384	324	85	777	661	186	883	751
Arrive On Green	0.04	0.12	0.12	0.12	0.21	0.21	0.05	0.42	0.42	0.10	0.47	0.47
Sat Flow, veh/h	1774	1405	383	1774	1863	1574	1774	1863	1583	1774	1863	1583
Grp Volume(v), veh/h	49	0	28	168	49	20	65	663	89	147	777	16
Grp Sat Flow(s),veh/h/ln	1774	0	1788	1774	1863	1574	1774	1863	1583	1774	1863	1583
Q Serve(g_s), s	2.3	0.0	1.2	7.8	1.8	0.9	3.1	27.3	2.9	6.8	31.9	0.5
Cycle Q Clear(g_c), s	2.3	0.0	1.2	7.8	1.8	0.9	3.1	27.3	2.9	6.8	31.9	0.5
Prop In Lane	1.00		0.21	1.00		1.00	1.00		1.00	1.00		1.00
Lane Grp Cap(c), veh/h	63	0	222	208	384	324	85	777	661	186	883	751
V/C Ratio(X)	0.78	0.00	0.13	0.81	0.13	0.06	0.76	0.85	0.13	0.79	0.88	0.02
Avail Cap(c_a), veh/h	419	0	443	419	462	390	524	1430	1215	524	1430	1215
HCM Platoon Ratio	1.00	1.00	1.00	1.00	1.00	1.00	1.00	1.00	1.00	1.00	1.00	1.00
Upstream Filter(I)	1.00	0.00	1.00	1.00	1.00	1.00	1.00	1.00	1.00	1.00	1.00	1.00
Uniform Delay (d), s/veh	40.5	0.0	33.0	36.4	27.4	27.0	39.8	22.3	15.2	37.0	20.1	11.8
Incr Delay (d2), s/veh	18.4	0.0	0.3	7.2	0.1	0.1	13.2	2.8	0.1	7.3	3.9	0.0
Initial Q Delay(d3),s/veh	0.0	0.0	0.0	0.0	0.0	0.0	0.0	0.0	0.0	0.0	0.0	0.0
%ile BackOfQ(50%),veh/ln	1.5	0.0	0.6	4.2	1.0	0.4	1.8	14.6	1.3	3.7	17.2	0.2
LnGrp Delay(d),s/veh	58.9	0.0	33.2	43.7	27.6	27.1	53.0	25.1	15.3	44.3	24.0	11.8
LnGrp LOS	E		C	D	C	C	D	C	B	D	C	B
Approach Vol, veh/h		77			237			817			940	
Approach Delay, s/veh		49.6			39.0			26.3			27.0	
Approach LOS		D			D			C			C	

Timer	1	2	3	4	5	6	7	8
Assigned Phs	1	2	3	4	5	6	7	8
Phs Duration (G+Y+Rc), s	13.9	40.3	14.9	15.5	9.1	45.2	8.0	22.5
Change Period (Y+Rc), s	5.0	5.0	5.0	5.0	5.0	5.0	5.0	5.0
Max Green Setting (Gmax), s	25.0	65.0	20.0	21.0	25.0	65.0	20.0	21.0
Max Q Clear Time (g_c+I1), s	3.8	29.3	9.8	3.2	5.1	33.9	4.3	3.8
Green Ext Time (p_c), s	0.3	5.3	0.3	0.1	0.1	6.3	0.1	0.2

Intersection Summary	
HCM 2010 Ctrl Delay	28.9
HCM 2010 LOS	C

Movement	EBL	EBT	EBR	WBL	WBT	WBR	NBL	NBT	NBR	SBL	SBT	SBR
Lane Configurations												
Traffic Volume (veh/h)	40	10	480	20	5	0	315	765	45	15	1005	15
Future Volume (veh/h)	40	10	480	20	5	0	315	765	45	15	1005	15
Number	3	8	18	7	4	14	1	6	16	5	2	12
Initial Q (Qb), veh	0	0	0	0	0	0	0	0	0	0	0	0
Ped-Bike Adj(A_pbT)	0.99		1.00	0.99		1.00	1.00		1.00	1.00		1.00
Parking Bus, Adj	1.00	1.00	1.00	1.00	1.00	1.00	1.00	1.00	1.00	1.00	1.00	1.00
Adj Sat Flow, veh/h/ln	1900	1863	1863	1900	1863	1900	1863	1863	1900	1863	1863	1863
Adj Flow Rate, veh/h	43	11	0	22	5	0	342	832	48	16	1092	7
Adj No. of Lanes	0	1	1	0	1	0	1	2	0	1	2	1
Peak Hour Factor	0.92	0.92	0.92	0.92	0.92	0.92	0.92	0.92	0.92	0.92	0.92	0.92
Percent Heavy Veh, %	2	2	2	2	2	2	2	2	2	2	2	2
Cap, veh/h	177	25	111	179	29	0	401	2364	136	20	1701	761
Arrive On Green	0.08	0.07	0.00	0.08	0.07	0.00	0.23	0.70	0.70	0.01	0.48	0.48
Sat Flow, veh/h	1160	364	1583	1172	414	0	1774	3402	196	1774	3539	1583
Grp Volume(v), veh/h	54	0	0	27	0	0	342	433	447	16	1092	7
Grp Sat Flow(s),veh/h/ln	1525	0	1583	1586	0	0	1774	1770	1828	1774	1770	1583
Q Serve(g_s), s	1.2	0.0	0.0	0.0	0.0	0.0	12.4	6.6	6.6	0.6	15.5	0.2
Cycle Q Clear(g_c), s	2.1	0.0	0.0	0.9	0.0	0.0	12.4	6.6	6.6	0.6	15.5	0.2
Prop In Lane	0.80		1.00	0.81		0.00	1.00		0.11	1.00		1.00
Lane Grp Cap(c), veh/h	226	0	111	232	0	0	401	1230	1271	20	1701	761
V/C Ratio(X)	0.24	0.00	0.00	0.12	0.00	0.00	0.85	0.35	0.35	0.78	0.64	0.01
Avail Cap(c_a), veh/h	781	0	708	717	0	0	1878	1504	1554	1878	3008	1346
HCM Platoon Ratio	1.00	1.00	1.00	1.00	1.00	1.00	1.00	1.00	1.00	1.00	1.00	1.00
Upstream Filter(I)	1.00	0.00	0.00	1.00	0.00	0.00	1.00	1.00	1.00	1.00	1.00	1.00
Uniform Delay (d), s/veh	29.6	0.0	0.0	29.1	0.0	0.0	24.9	4.1	4.1	33.1	13.1	9.1
Incr Delay (d2), s/veh	0.5	0.0	0.0	0.2	0.0	0.0	2.0	0.4	0.4	20.9	0.9	0.0
Initial Q Delay(d3),s/veh	0.0	0.0	0.0	0.0	0.0	0.0	0.0	0.0	0.0	0.0	0.0	0.0
%ile BackOfQ(50%),veh/ln	1.0	0.0	0.0	0.5	0.0	0.0	6.3	3.3	3.4	0.4	7.8	0.1
LnGrp Delay(d),s/veh	30.1	0.0	0.0	29.3	0.0	0.0	26.9	4.5	4.5	54.0	13.9	9.1
LnGrp LOS	C			C			C	A	A	D	B	A
Approach Vol, veh/h		54			27			1222			1115	
Approach Delay, s/veh		30.1			29.3			10.8			14.5	
Approach LOS		C			C			B			B	

Timer	1	2	3	4	5	6	7	8
Assigned Phs	1	2		4	5	6		8
Phs Duration (G+Y+Rc), s	19.1	38.2		9.7	4.8	52.6		9.7
Change Period (Y+Rc), s	4.0	6.0		5.0	4.0	6.0		5.0
Max Green Setting (Gmax), s	71.0	57.0		27.0	71.0	57.0		30.0
Max Q Clear Time (g_c+I1), s	14.4	17.5		2.9	2.6	8.6		4.1
Green Ext Time (p_c), s	0.8	14.7		0.1	0.0	10.3		0.1

Intersection Summary	
HCM 2010 Ctrl Delay	13.1
HCM 2010 LOS	B

Movement	EBL	EBT	EBR	WBL	WBT	WBR	NBL	NBT	NBR	SBL	SBT	SBR
Lane Configurations												
Traffic Volume (veh/h)	35	0	70	10	5	10	135	1170	20	20	1475	75
Future Volume (veh/h)	35	0	70	10	5	10	135	1170	20	20	1475	75
Number	3	8	18	7	4	14	1	6	16	5	2	12
Initial Q (Qb), veh	0	0	0	0	0	0	0	0	0	0	0	0
Ped-Bike Adj(A_pbT)	1.00		1.00	1.00		1.00	1.00		1.00	1.00		1.00
Parking Bus, Adj	1.00	1.00	1.00	1.00	1.00	1.00	1.00	1.00	1.00	1.00	1.00	1.00
Adj Sat Flow, veh/h/ln	1900	1863	1863	1900	1863	1900	1863	1863	1900	1863	1863	1863
Adj Flow Rate, veh/h	38	0	1	11	5	1	147	1272	21	22	1603	53
Adj No. of Lanes	0	1	1	0	1	0	1	2	0	1	2	1
Peak Hour Factor	0.92	0.92	0.92	0.92	0.92	0.92	0.92	0.92	0.92	0.92	0.92	0.92
Percent Heavy Veh, %	2	2	2	2	2	2	2	2	2	2	2	2
Cap, veh/h	161	0	71	103	21	3	183	2721	45	26	2389	1069
Arrive On Green	0.06	0.00	0.04	0.06	0.04	0.04	0.10	0.76	0.76	0.01	0.67	0.67
Sat Flow, veh/h	1558	0	1583	634	475	69	1774	3563	59	1774	3539	1583
Grp Volume(v), veh/h	38	0	1	17	0	0	147	632	661	22	1603	53
Grp Sat Flow(s),veh/h/ln	1558	0	1583	1178	0	0	1774	1770	1852	1774	1770	1583
Q Serve(g_s), s	0.0	0.0	0.0	0.3	0.0	0.0	6.4	10.4	10.4	1.0	21.3	0.9
Cycle Q Clear(g_c), s	1.6	0.0	0.0	1.9	0.0	0.0	6.4	10.4	10.4	1.0	21.3	0.9
Prop In Lane	1.00		1.00	0.65		0.06	1.00		0.03	1.00		1.00
Lane Grp Cap(c), veh/h	181	0	71	143	0	0	183	1351	1414	26	2389	1069
V/C Ratio(X)	0.21	0.00	0.01	0.12	0.00	0.00	0.80	0.47	0.47	0.85	0.67	0.05
Avail Cap(c_a), veh/h	526	0	461	519	0	0	471	1926	2016	247	3403	1523
HCM Platoon Ratio	1.00	1.00	1.00	1.00	1.00	1.00	1.00	1.00	1.00	1.00	1.00	1.00
Upstream Filter(I)	1.00	0.00	1.00	1.00	0.00	0.00	1.00	1.00	1.00	1.00	1.00	1.00
Uniform Delay (d), s/veh	36.3	0.0	36.1	36.4	0.0	0.0	34.7	3.4	3.4	38.9	7.6	4.3
Incr Delay (d2), s/veh	0.2	0.0	0.0	0.1	0.0	0.0	3.1	0.5	0.5	23.8	0.7	0.0
Initial Q Delay(d3),s/veh	0.0	0.0	0.0	0.0	0.0	0.0	0.0	0.0	0.0	0.0	0.0	0.0
%ile BackOfQ(50%),veh/ln	0.8	0.0	0.0	0.4	0.0	0.0	3.3	5.1	5.3	0.6	10.5	0.4
LnGrp Delay(d),s/veh	36.6	0.0	36.1	36.6	0.0	0.0	37.7	4.0	4.0	62.7	8.3	4.4
LnGrp LOS	D		D	D			D	A	A	E	A	A
Approach Vol, veh/h		39			17			1440			1678	
Approach Delay, s/veh		36.5			36.6			7.4			8.9	
Approach LOS		D			D			A			A	

Timer	1	2	3	4	5	6	7	8
Assigned Phs	1	2		4	5	6		8
Phs Duration (G+Y+Rc), s	12.2	58.3		8.5	5.1	65.3		8.5
Change Period (Y+Rc), s	4.0	5.0		5.0	4.0	5.0		5.0
Max Green Setting (Gmax), s	21.0	76.0		23.0	11.0	86.0		23.0
Max Q Clear Time (g_c+I1), s	3.6	23.3		3.9	3.0	12.4		3.6
Green Ext Time (p_c), s	0.1	30.1		0.0	0.0	21.1		0.0

Intersection Summary	
HCM 2010 Ctrl Delay	8.7
HCM 2010 LOS	A

Movement	EBL	EBT	EBR	WBL	WBT	WBR	NBL	NBT	NBR	SBL	SBT	SBR
Lane Configurations												
Traffic Volume (veh/h)	60	5	35	40	15	55	110	1325	60	30	1415	50
Future Volume (veh/h)	60	5	35	40	15	55	110	1325	60	30	1415	50
Number	3	8	18	7	4	14	1	6	16	5	2	12
Initial Q (Qb), veh	0	0	0	0	0	0	0	0	0	0	0	0
Ped-Bike Adj(A_pbT)	1.00		1.00	1.00		1.00	1.00		1.00	1.00		1.00
Parking Bus, Adj	1.00	1.00	1.00	1.00	1.00	1.00	1.00	1.00	1.00	1.00	1.00	1.00
Adj Sat Flow, veh/h/ln	1900	1863	1863	1863	1863	1900	1863	1863	1863	1863	1863	1863
Adj Flow Rate, veh/h	65	5	1	43	16	1	120	1440	48	33	1538	39
Adj No. of Lanes	0	1	1	1	1	0	1	2	1	1	2	1
Peak Hour Factor	0.92	0.92	0.92	0.92	0.92	0.92	0.92	0.92	0.92	0.92	0.92	0.92
Percent Heavy Veh, %	2	2	2	2	2	2	2	2	2	2	2	2
Cap, veh/h	165	11	158	111	174	11	142	2756	1233	43	2560	1145
Arrive On Green	0.10	0.10	0.10	0.10	0.10	0.10	0.08	0.78	0.78	0.02	0.72	0.72
Sat Flow, veh/h	1202	111	1579	1401	1735	108	1774	3539	1583	1774	3539	1583
Grp Volume(v), veh/h	70	0	1	43	0	17	120	1440	48	33	1538	39
Grp Sat Flow(s),veh/h/ln	1313	0	1579	1401	0	1843	1774	1770	1583	1774	1770	1583
Q Serve(g_s), s	7.1	0.0	0.1	4.7	0.0	1.3	10.3	23.5	1.1	2.9	33.0	1.1
Cycle Q Clear(g_c), s	8.4	0.0	0.1	13.1	0.0	1.3	10.3	23.5	1.1	2.9	33.0	1.1
Prop In Lane	0.93		1.00	1.00		0.06	1.00		1.00	1.00		1.00
Lane Grp Cap(c), veh/h	176	0	158	111	0	184	142	2756	1233	43	2560	1145
V/C Ratio(X)	0.40	0.00	0.01	0.39	0.00	0.09	0.85	0.52	0.04	0.76	0.60	0.03
Avail Cap(c_a), veh/h	254	0	244	187	0	285	240	2756	1233	240	2560	1145
HCM Platoon Ratio	1.00	1.00	1.00	1.00	1.00	1.00	1.00	1.00	1.00	1.00	1.00	1.00
Upstream Filter(I)	1.00	0.00	1.00	1.00	0.00	1.00	0.72	0.72	0.72	1.00	1.00	1.00
Uniform Delay (d), s/veh	67.0	0.0	62.8	72.8	0.0	63.4	70.4	6.4	3.9	75.2	10.5	6.1
Incr Delay (d2), s/veh	1.4	0.0	0.0	2.2	0.0	0.2	3.8	0.5	0.0	9.7	1.1	0.1
Initial Q Delay(d3),s/veh	0.0	0.0	0.0	0.0	0.0	0.0	0.0	0.0	0.0	0.0	0.0	0.0
%ile BackOfQ(50%),veh/ln	2.9	0.0	0.0	1.9	0.0	0.7	5.2	11.6	0.5	1.5	16.4	0.5
LnGrp Delay(d),s/veh	68.5	0.0	62.8	75.0	0.0	63.6	74.2	6.9	4.0	84.8	11.6	6.1
LnGrp LOS	E		E	E		E	E	A	A	F	B	A
Approach Vol, veh/h		71			60			1608			1610	
Approach Delay, s/veh		68.4			71.8			11.8			12.9	
Approach LOS		E			E			B			B	

Timer	1	2	3	4	5	6	7	8
Assigned Phs	1	2		4	5	6		8
Phs Duration (G+Y+Rc), s	16.4	118.1		20.5	7.8	126.7		20.5
Change Period (Y+Rc), s	4.0	6.0		5.0	4.0	6.0		5.0
Max Green Setting (Gmax), s	21.0	95.0		24.0	21.0	95.0		24.0
Max Q Clear Time (g_c+I1), s	12.3	35.0		15.1	4.9	25.5		10.4
Green Ext Time (p_c), s	0.1	29.9		0.1	0.0	28.5		0.1

Intersection Summary	
HCM 2010 Ctrl Delay	14.6
HCM 2010 LOS	B

Movement	EBL	EBT	EBR	WBL	WBT	WBR	NBL	NBT	NBR	SBL	SBT	SBR
Lane Configurations												
Traffic Volume (veh/h)	155	10	235	10	10	10	460	1385	15	85	1330	125
Future Volume (veh/h)	155	10	235	10	10	10	460	1385	15	85	1330	125
Number	3	8	18	7	4	14	1	6	16	5	2	12
Initial Q (Qb), veh	0	0	0	0	0	0	0	0	0	0	0	0
Ped-Bike Adj(A_pbT)	1.00		0.97	1.00		0.97	1.00		1.00	1.00		1.00
Parking Bus, Adj	1.00	1.00	1.00	1.00	1.00	1.00	1.00	1.00	1.00	1.00	1.00	1.00
Adj Sat Flow, veh/h/ln	1863	1863	1863	1900	1863	1900	1863	1863	1900	1863	1863	1863
Adj Flow Rate, veh/h	176	0	70	11	11	3	500	1505	16	92	1446	101
Adj No. of Lanes	2	0	2	0	1	0	2	2	0	1	2	1
Peak Hour Factor	0.92	0.92	0.92	0.92	0.92	0.92	0.92	0.92	0.92	0.92	0.92	0.92
Percent Heavy Veh, %	2	2	2	2	2	2	2	2	2	2	2	2
Cap, veh/h	329	0	838	57	57	16	627	2239	24	146	1857	962
Arrive On Green	0.09	0.00	0.08	0.07	0.07	0.05	0.18	0.62	0.61	0.08	0.52	0.52
Sat Flow, veh/h	3548	0	3073	783	783	213	3442	3588	38	1774	3539	1578
Grp Volume(v), veh/h	176	0	70	25	0	0	500	742	779	92	1446	101
Grp Sat Flow(s),veh/h/ln	1774	0	1537	1779	0	0	1721	1770	1856	1774	1770	1578
Q Serve(g_s), s	5.9	0.0	2.1	1.7	0.0	0.0	17.4	34.0	34.1	6.3	41.1	3.3
Cycle Q Clear(g_c), s	5.9	0.0	2.1	1.7	0.0	0.0	17.4	34.0	34.1	6.3	41.1	3.3
Prop In Lane	1.00		1.00	0.44		0.12	1.00		0.02	1.00		1.00
Lane Grp Cap(c), veh/h	329	0	838	129	0	0	627	1105	1159	146	1857	962
V/C Ratio(X)	0.53	0.00	0.08	0.19	0.00	0.00	0.80	0.67	0.67	0.63	0.78	0.10
Avail Cap(c_a), veh/h	963	0	1387	440	0	0	1594	2741	2875	212	4267	2037
HCM Platoon Ratio	1.00	1.00	1.00	1.00	1.00	1.00	1.00	1.00	1.00	1.00	1.00	1.00
Upstream Filter(I)	1.00	0.00	1.00	1.00	0.00	0.00	1.00	1.00	1.00	1.00	1.00	1.00
Uniform Delay (d), s/veh	54.2	0.0	34.4	54.8	0.0	0.0	49.0	15.2	15.3	55.6	23.9	10.2
Incr Delay (d2), s/veh	0.5	0.0	0.0	0.7	0.0	0.0	0.9	1.0	1.0	1.7	1.0	0.1
Initial Q Delay(d3),s/veh	0.0	0.0	0.0	0.0	0.0	0.0	0.0	0.0	0.0	0.0	0.0	0.0
%ile BackOfQ(50%),veh/ln	2.9	0.0	0.9	0.8	0.0	0.0	8.3	16.8	17.6	3.2	20.4	1.8
LnGrp Delay(d),s/veh	54.7	0.0	34.4	55.5	0.0	0.0	49.9	16.2	16.2	57.2	25.0	10.3
LnGrp LOS	D		C	E			D	B	B	E	C	B
Approach Vol, veh/h		246			25			2021			1639	
Approach Delay, s/veh		49.0			55.5			24.6			25.9	
Approach LOS		D			E			C			C	

Timer	1	2	3	4	5	6	7	8
Assigned Phs	1	2		4	5	6		8
Phs Duration (G+Y+Rc), s	26.8	69.7		13.1	14.3	82.2		15.6
Change Period (Y+Rc), s	6.0	6.0		7.0	6.0	6.0		7.0
Max Green Setting (Gmax), s	56.0	149.0		28.0	13.0	192.0		31.0
Max Q Clear Time (g_c+I1), s	19.4	43.1		3.7	8.3	36.1		7.9
Green Ext Time (p_c), s	1.4	20.6		0.0	0.1	18.7		0.7

Intersection Summary	
HCM 2010 Ctrl Delay	26.8
HCM 2010 LOS	C

Notes

Movement	EBL	EBT	EBR	WBL	WBT	WBR	NBL	NBT	NBR	SBL	SBT	SBR
Lane Configurations												
Traffic Volume (veh/h)	5	5	5	60	0	45	5	1860	90	35	1520	5
Future Volume (veh/h)	5	5	5	60	0	45	5	1860	90	35	1520	5
Number	3	8	18	7	4	14	1	6	16	5	2	12
Initial Q (Qb), veh	0	0	0	0	0	0	0	0	0	0	0	0
Ped-Bike Adj(A_pbT)	0.98		0.97	0.98		0.97	1.00		1.00	1.00		1.00
Parking Bus, Adj	1.00	1.00	1.00	1.00	1.00	1.00	1.00	1.00	1.00	1.00	1.00	1.00
Adj Sat Flow, veh/h/ln	1900	1863	1900	1863	1863	1900	1863	1863	1900	1863	1863	1900
Adj Flow Rate, veh/h	5	5	1	65	0	1	5	2022	96	38	1652	5
Adj No. of Lanes	0	1	0	1	1	0	1	2	0	1	2	0
Peak Hour Factor	0.92	0.92	0.92	0.92	0.92	0.92	0.92	0.92	0.92	0.92	0.92	0.92
Percent Heavy Veh, %	2	2	2	2	2	2	2	2	2	2	2	2
Cap, veh/h	90	80	13	176	0	138	11	2715	128	63	2962	9
Arrive On Green	0.09	0.09	0.08	0.09	0.00	0.08	0.01	0.79	0.78	0.04	0.82	0.81
Sat Flow, veh/h	584	895	148	1372	0	1543	1774	3441	162	1774	3619	11
Grp Volume(v), veh/h	11	0	0	65	0	1	5	1032	1086	38	807	850
Grp Sat Flow(s),veh/h/ln	1627	0	0	1372	0	1543	1774	1770	1834	1774	1770	1861
Q Serve(g_s), s	0.0	0.0	0.0	5.4	0.0	0.1	0.4	41.3	43.0	3.0	21.3	21.4
Cycle Q Clear(g_c), s	0.8	0.0	0.0	6.1	0.0	0.1	0.4	41.3	43.0	3.0	21.3	21.4
Prop In Lane	0.45		0.09	1.00		1.00	1.00		0.09	1.00		0.01
Lane Grp Cap(c), veh/h	183	0	0	176	0	138	11	1396	1447	63	1448	1523
V/C Ratio(X)	0.06	0.00	0.00	0.37	0.00	0.01	0.45	0.74	0.75	0.60	0.56	0.56
Avail Cap(c_a), veh/h	312	0	0	289	0	265	101	1396	1447	101	1448	1523
HCM Platoon Ratio	1.00	1.00	1.00	1.00	1.00	1.00	1.00	1.00	1.00	1.00	1.00	1.00
Upstream Filter(I)	1.00	0.00	0.00	1.00	0.00	1.00	0.58	0.58	0.58	1.00	1.00	1.00
Uniform Delay (d), s/veh	58.4	0.0	0.0	60.7	0.0	58.5	69.3	7.5	7.7	66.5	4.2	4.2
Incr Delay (d2), s/veh	0.1	0.0	0.0	1.3	0.0	0.0	5.9	2.1	2.1	3.4	1.6	1.5
Initial Q Delay(d3),s/veh	0.0	0.0	0.0	0.0	0.0	0.0	0.0	0.0	0.0	0.0	0.0	0.0
%ile BackOfQ(50%),veh/ln	0.4	0.0	0.0	2.5	0.0	0.0	0.2	20.6	22.3	1.5	10.9	11.5
LnGrp Delay(d),s/veh	58.6	0.0	0.0	62.0	0.0	58.6	75.2	9.5	9.8	69.9	5.8	5.7
LnGrp LOS	E			E		E	E	A	A	E	A	A
Approach Vol, veh/h		11			66			2123			1695	
Approach Delay, s/veh		58.6			62.0			9.8			7.2	
Approach LOS		E			E			A			A	

Timer	1	2	3	4	5	6	7	8
Assigned Phs	1	2		4	5	6		8
Phs Duration (G+Y+Rc), s	4.9	118.6		16.5	9.0	114.5		16.5
Change Period (Y+Rc), s	4.0	5.0		5.0	4.0	5.0		5.0
Max Green Setting (Gmax), s	8.0	95.0		23.0	8.0	95.0		23.0
Max Q Clear Time (g_c+I1), s	2.8	23.4		8.1	5.0	45.0		2.8
Green Ext Time (p_c), s	0.0	34.6		0.1	0.0	40.8		0.0

Intersection Summary	
HCM 2010 Ctrl Delay	9.7
HCM 2010 LOS	A

Movement	EBL	EBT	EBR	WBL	WBT	WBR	NBL	NBT	NBR	SBL	SBT	SBR
Lane Configurations												
Traffic Volume (veh/h)	95	5	5	105	15	15	5	1830	20	10	1345	210
Future Volume (veh/h)	95	5	5	105	15	15	5	1830	20	10	1345	210
Number	3	8	18	7	4	14	1	6	16	5	2	12
Initial Q (Qb), veh	0	0	0	0	0	0	0	0	0	0	0	0
Ped-Bike Adj(A_pbT)	1.00		1.00	1.00		1.00	1.00		1.00	1.00		1.00
Parking Bus, Adj	1.00	1.00	1.00	1.00	1.00	1.00	1.00	1.00	1.00	1.00	1.00	1.00
Adj Sat Flow, veh/h/ln	1900	1863	1900	1900	1863	1900	1863	1863	1900	1863	1863	1863
Adj Flow Rate, veh/h	103	5	3	114	16	12	5	1989	22	11	1462	166
Adj No. of Lanes	0	1	0	0	1	0	1	2	0	1	2	1
Peak Hour Factor	0.92	0.92	0.92	0.92	0.92	0.92	0.92	0.92	0.92	0.92	0.92	0.92
Percent Heavy Veh, %	2	2	2	2	2	2	2	2	2	2	2	2
Cap, veh/h	210	7	4	198	20	15	7	2808	31	14	2785	1246
Arrive On Green	0.11	0.11	0.10	0.11	0.11	0.10	0.00	0.78	0.77	0.01	0.79	0.79
Sat Flow, veh/h	1391	68	41	1323	186	139	1774	3586	40	1774	3539	1583
Grp Volume(v), veh/h	111	0	0	142	0	0	5	980	1031	11	1462	166
Grp Sat Flow(s),veh/h/ln	1499	0	0	1647	0	0	1774	1770	1856	1774	1770	1583
Q Serve(g_s), s	0.0	0.0	0.0	1.3	0.0	0.0	0.3	32.3	32.6	0.7	18.0	3.0
Cycle Q Clear(g_c), s	8.3	0.0	0.0	9.6	0.0	0.0	0.3	32.3	32.6	0.7	18.0	3.0
Prop In Lane	0.93		0.03	0.80		0.08	1.00		0.02	1.00		1.00
Lane Grp Cap(c), veh/h	221	0	0	234	0	0	7	1386	1453	14	2785	1246
V/C Ratio(X)	0.50	0.00	0.00	0.61	0.00	0.00	0.73	0.71	0.71	0.81	0.52	0.13
Avail Cap(c_a), veh/h	430	0	0	451	0	0	118	1386	1453	118	2785	1246
HCM Platoon Ratio	1.00	1.00	1.00	1.00	1.00	1.00	1.00	1.00	1.00	1.00	1.00	1.00
Upstream Filter(I)	1.00	0.00	0.00	1.00	0.00	0.00	0.63	0.63	0.63	0.82	0.82	0.82
Uniform Delay (d), s/veh	51.3	0.0	0.0	51.9	0.0	0.0	59.7	6.3	6.4	59.5	4.6	3.0
Incr Delay (d2), s/veh	1.8	0.0	0.0	2.5	0.0	0.0	29.5	1.9	1.9	27.7	0.6	0.2
Initial Q Delay(d3),s/veh	0.0	0.0	0.0	0.0	0.0	0.0	0.0	0.0	0.0	0.0	0.0	0.0
%ile BackOfQ(50%),veh/ln	3.7	0.0	0.0	4.7	0.0	0.0	0.2	16.3	17.1	0.5	8.8	1.4
LnGrp Delay(d),s/veh	53.1	0.0	0.0	54.4	0.0	0.0	89.2	8.3	8.2	87.1	5.2	3.2
LnGrp LOS	D			D			F	A	A	F	A	A
Approach Vol, veh/h		111			142			2016			1639	
Approach Delay, s/veh		53.1			54.4			8.4			5.6	
Approach LOS		D			D			A			A	

Timer	1	2	3	4	5	6	7	8
Assigned Phs	1	2		4	5	6		8
Phs Duration (G+Y+Rc), s	4.5	98.4		17.1	4.9	98.0		17.1
Change Period (Y+Rc), s	4.0	5.0		5.0	4.0	5.0		5.0
Max Green Setting (Gmax), s	8.0	68.0		30.0	8.0	68.0		30.0
Max Q Clear Time (g_c+I1), s	2.3	20.0		11.6	2.7	34.6		10.3
Green Ext Time (p_c), s	0.0	33.7		0.5	0.0	30.6		0.3

Intersection Summary	
HCM 2010 Ctrl Delay	10.2
HCM 2010 LOS	B

Movement	EBL	EBT	EBR	WBL	WBT	WBR	NBL	NBT	NBR	SBL	SBT	SBR
Lane Configurations												
Traffic Volume (veh/h)	155	30	20	145	25	35	25	1640	75	10	1375	80
Future Volume (veh/h)	155	30	20	145	25	35	25	1640	75	10	1375	80
Number	3	8	18	7	4	14	1	6	16	5	2	12
Initial Q (Qb), veh	0	0	0	0	0	0	0	0	0	0	0	0
Ped-Bike Adj(A_pbT)	0.98		0.98	0.99		0.98	1.00		1.00	1.00		1.00
Parking Bus, Adj	1.00	1.00	1.00	1.00	1.00	1.00	1.00	1.00	1.00	1.00	1.00	1.00
Adj Sat Flow, veh/h/ln	1863	1863	1900	1863	1863	1900	1863	1863	1900	1863	1863	1900
Adj Flow Rate, veh/h	168	33	2	158	27	3	27	1783	80	11	1495	85
Adj No. of Lanes	1	1	0	1	1	0	1	2	0	1	2	0
Peak Hour Factor	0.92	0.92	0.92	0.92	0.92	0.92	0.92	0.92	0.92	0.92	0.92	0.92
Percent Heavy Veh, %	2	2	2	2	2	2	2	2	2	2	2	2
Cap, veh/h	256	287	17	252	272	30	34	2560	114	13	2486	141
Arrive On Green	0.17	0.17	0.17	0.17	0.17	0.16	0.04	1.00	1.00	0.01	0.73	0.72
Sat Flow, veh/h	1353	1737	105	1348	1644	183	1774	3451	154	1774	3405	193
Grp Volume(v), veh/h	168	0	35	158	0	30	27	909	954	11	774	806
Grp Sat Flow(s),veh/h/ln	1353	0	1842	1348	0	1827	1774	1770	1836	1774	1770	1829
Q Serve(g_s), s	16.8	0.0	2.3	15.8	0.0	2.0	2.1	0.0	0.0	0.9	29.4	29.8
Cycle Q Clear(g_c), s	18.8	0.0	2.3	18.1	0.0	2.0	2.1	0.0	0.0	0.9	29.4	29.8
Prop In Lane	1.00		0.06	1.00		0.10	1.00		0.08	1.00		0.11
Lane Grp Cap(c), veh/h	256	0	304	252	0	302	34	1312	1361	13	1292	1335
V/C Ratio(X)	0.66	0.00	0.12	0.63	0.00	0.10	0.79	0.69	0.70	0.83	0.60	0.60
Avail Cap(c_a), veh/h	303	0	368	299	0	365	139	1312	1361	139	1292	1335
HCM Platoon Ratio	1.00	1.00	1.00	1.00	1.00	1.00	2.00	2.00	2.00	1.00	1.00	1.00
Upstream Filter(I)	1.00	0.00	1.00	1.00	0.00	1.00	0.44	0.44	0.44	0.82	0.82	0.82
Uniform Delay (d), s/veh	57.6	0.0	49.7	57.4	0.0	49.6	67.0	0.0	0.0	69.4	9.1	9.2
Incr Delay (d2), s/veh	3.9	0.0	0.2	3.1	0.0	0.1	6.8	1.4	1.4	31.3	1.7	1.7
Initial Q Delay(d3),s/veh	0.0	0.0	0.0	0.0	0.0	0.0	0.0	0.0	0.0	0.0	0.0	0.0
%ile BackOfQ(50%),veh/ln	6.6	0.0	1.2	6.1	0.0	1.0	1.1	0.5	0.5	0.5	14.8	15.6
LnGrp Delay(d),s/veh	61.5	0.0	49.9	60.5	0.0	49.8	73.9	1.4	1.4	100.7	10.8	10.8
LnGrp LOS	E		D	E		D	E	A	A	F	B	B
Approach Vol, veh/h		203			188			1890			1591	
Approach Delay, s/veh		59.5			58.8			2.4			11.4	
Approach LOS		E			E			A			B	

Timer	1	2	3	4	5	6	7	8
Assigned Phs	1	2		4	5	6		8
Phs Duration (G+Y+Rc), s	6.7	106.2		27.1	5.0	107.8		27.1
Change Period (Y+Rc), s	4.0	5.0		5.0	4.0	5.0		5.0
Max Green Setting (Gmax), s	11.0	88.0		27.0	11.0	88.0		27.0
Max Q Clear Time (g_c+I1), s	4.1	31.8		20.1	2.9	2.0		20.8
Green Ext Time (p_c), s	0.0	28.5		0.4	0.0	48.3		0.4

Intersection Summary	
HCM 2010 Ctrl Delay	11.8
HCM 2010 LOS	B

Movement	EBL	EBT	EBR	WBL	WBT	WBR	NBL	NBT	NBR	SBL	SBT	SBR
Lane Configurations												
Traffic Volume (veh/h)	15	110	35	95	75	720	25	935	120	520	950	20
Future Volume (veh/h)	15	110	35	95	75	720	25	935	120	520	950	20
Number	7	4	14	3	8	18	1	6	16	5	2	12
Initial Q (Qb), veh	0	0	0	0	0	0	0	0	0	0	0	0
Ped-Bike Adj(A_pbT)	0.99		0.99	0.99		0.99	1.00		1.00	1.00		1.00
Parking Bus, Adj	1.00	1.00	1.00	1.00	1.00	1.00	1.00	1.00	1.00	1.00	1.00	1.00
Adj Sat Flow, veh/h/ln	1900	1863	1863	1863	1863	1863	1863	1863	1863	1863	1863	1900
Adj Flow Rate, veh/h	16	120	5	103	82	448	27	1016	53	565	1033	21
Adj No. of Lanes	0	1	1	1	1	1	1	2	1	2	2	0
Peak Hour Factor	0.92	0.92	0.92	0.92	0.92	0.92	0.92	0.92	0.92	0.92	0.92	0.92
Percent Heavy Veh, %	2	2	2	2	2	2	2	2	2	2	2	2
Cap, veh/h	53	349	337	360	577	486	34	1504	670	619	2077	42
Arrive On Green	0.22	0.22	0.22	0.07	0.31	0.31	0.02	0.42	0.42	0.36	1.00	1.00
Sat Flow, veh/h	112	1623	1563	1774	1863	1570	1774	3539	1576	3442	3547	72
Grp Volume(v), veh/h	136	0	5	103	82	448	27	1016	53	565	515	539
Grp Sat Flow(s),veh/h/ln	1734	0	1563	1774	1863	1570	1774	1770	1576	1721	1770	1850
Q Serve(g_s), s	0.0	0.0	0.4	6.1	4.5	38.6	2.1	32.4	2.8	21.9	0.0	0.0
Cycle Q Clear(g_c), s	8.7	0.0	0.4	6.1	4.5	38.6	2.1	32.4	2.8	21.9	0.0	0.0
Prop In Lane	0.12		1.00	1.00		1.00	1.00		1.00	1.00		0.04
Lane Grp Cap(c), veh/h	402	0	337	360	577	486	34	1504	670	619	1036	1083
V/C Ratio(X)	0.34	0.00	0.01	0.29	0.14	0.92	0.79	0.68	0.08	0.91	0.50	0.50
Avail Cap(c_a), veh/h	402	0	337	535	665	561	177	1504	670	836	1036	1083
HCM Platoon Ratio	1.00	1.00	1.00	1.00	1.00	1.00	1.00	1.00	1.00	2.00	2.00	2.00
Upstream Filter(I)	1.00	0.00	1.00	1.00	1.00	1.00	0.79	0.79	0.79	0.74	0.74	0.74
Uniform Delay (d), s/veh	46.5	0.0	43.2	37.3	34.9	46.7	68.4	32.5	24.0	43.8	0.0	0.0
Incr Delay (d2), s/veh	0.5	0.0	0.0	0.4	0.1	19.3	11.4	1.9	0.2	7.6	1.3	1.2
Initial Q Delay(d3),s/veh	0.0	0.0	0.0	0.0	0.0	0.0	0.0	0.0	0.0	0.0	0.0	0.0
%ile BackOfQ(50%),veh/ln	4.5	0.0	0.2	3.0	2.3	19.4	1.2	16.2	1.3	11.0	0.4	0.4
LnGrp Delay(d),s/veh	47.0	0.0	43.2	37.8	35.0	66.0	79.8	34.4	24.1	51.4	1.3	1.2
LnGrp LOS	D		D	D	D	E	E	C	C	D	A	A
Approach Vol, veh/h		141			633			1096			1619	
Approach Delay, s/veh		46.8			57.4			35.0			18.8	
Approach LOS		D			E			D			B	

Timer	1	2	3	4	5	6	7	8
Assigned Phs	1	2	3	4	5	6		8
Phs Duration (G+Y+Rc), s	6.7	86.0	13.2	34.2	29.2	63.5		47.3
Change Period (Y+Rc), s	4.0	5.0	5.0	5.0	4.0	5.0		5.0
Max Green Setting (Gmax), s	14.0	63.0	22.0	22.0	34.0	43.0		49.0
Max Q Clear Time (g_c+I1), s	4.1	2.0	8.1	10.7	23.9	34.4		40.6
Green Ext Time (p_c), s	0.0	14.1	0.3	0.4	1.3	5.5		1.7

Intersection Summary	
HCM 2010 Ctrl Delay	32.0
HCM 2010 LOS	C

Notes

Intersection	
Int Delay, s/veh	0.1

Movement	WBL	WBR	NBT	NBR	SBL	SBT
Lane Configurations		↱	↑	↱		↑
Traffic Vol, veh/h	0	15	780	25	0	915
Future Vol, veh/h	0	15	780	25	0	915
Conflicting Peds, #/hr	0	0	0	0	0	0
Sign Control	Stop	Stop	Free	Free	Free	Free
RT Channelized	-	None	-	None	-	None
Storage Length	-	0	-	0	-	-
Veh in Median Storage, #	0	-	0	-	-	0
Grade, %	0	-	0	-	-	0
Peak Hour Factor	92	92	92	92	92	92
Heavy Vehicles, %	2	2	2	2	2	2
Mvmt Flow	0	16	848	27	0	995

Major/Minor	Minor1		Major1		Major2	
Conflicting Flow All	-	848	0	0	-	-
Stage 1	-	-	-	-	-	-
Stage 2	-	-	-	-	-	-
Critical Hdwy	-	6.22	-	-	-	-
Critical Hdwy Stg 1	-	-	-	-	-	-
Critical Hdwy Stg 2	-	-	-	-	-	-
Follow-up Hdwy	-	3.318	-	-	-	-
Pot Cap-1 Maneuver	0	361	-	-	0	-
Stage 1	0	-	-	-	0	-
Stage 2	0	-	-	-	0	-
Platoon blocked, %			-	-		-
Mov Cap-1 Maneuver	-	361	-	-	-	-
Mov Cap-2 Maneuver	-	-	-	-	-	-
Stage 1	-	-	-	-	-	-
Stage 2	-	-	-	-	-	-

Approach	WB	NB	SB
HCM Control Delay, s	15.4	0	0
HCM LOS	C		

Minor Lane/Major Mvmt	NBT	NBR	WBLn1	SBT
Capacity (veh/h)	-	-	361	-
HCM Lane V/C Ratio	-	-	0.045	-
HCM Control Delay (s)	-	-	15.4	-
HCM Lane LOS	-	-	C	-
HCM 95th %tile Q(veh)	-	-	0.1	-

Intersection	
Int Delay, s/veh	1.5

Movement	WBL	WBR	NBT	NBR	SBL	SBT
Lane Configurations						
Traffic Vol, veh/h	65	35	785	20	10	990
Future Vol, veh/h	65	35	785	20	10	990
Conflicting Peds, #/hr	0	0	0	0	0	0
Sign Control	Stop	Stop	Free	Free	Free	Free
RT Channelized	-	None	-	None	-	None
Storage Length	0	100	-	100	100	-
Veh in Median Storage, #	0	-	0	-	-	0
Grade, %	0	-	0	-	-	0
Peak Hour Factor	92	92	92	92	92	92
Heavy Vehicles, %	2	2	2	2	2	2
Mvmt Flow	71	38	853	22	11	1076

Major/Minor	Minor1		Major1		Major2	
Conflicting Flow All	1951	853	0	0	875	0
Stage 1	853	-	-	-	-	-
Stage 2	1098	-	-	-	-	-
Critical Hdwy	6.42	6.22	-	-	4.12	-
Critical Hdwy Stg 1	5.42	-	-	-	-	-
Critical Hdwy Stg 2	5.42	-	-	-	-	-
Follow-up Hdwy	3.518	3.318	-	-	2.218	-
Pot Cap-1 Maneuver	71	359	-	-	771	-
Stage 1	418	-	-	-	-	-
Stage 2	319	-	-	-	-	-
Platoon blocked, %			-	-		-
Mov Cap-1 Maneuver	~ 70	359	-	-	771	-
Mov Cap-2 Maneuver	192	-	-	-	-	-
Stage 1	412	-	-	-	-	-
Stage 2	319	-	-	-	-	-

Approach	WB	NB	SB
HCM Control Delay, s	28	0	0.1
HCM LOS	D		

Minor Lane/Major Mvmt	NBT	NBR	WBLn1	WBLn2	SBL	SBT
Capacity (veh/h)	-	-	192	359	771	-
HCM Lane V/C Ratio	-	-	0.368	0.106	0.014	-
HCM Control Delay (s)	-	-	34.3	16.2	9.7	-
HCM Lane LOS	-	-	D	C	A	-
HCM 95th %tile Q(veh)	-	-	1.6	0.4	0	-

Notes

~: Volume exceeds capacity $: Delay exceeds 300s +: Computation Not Defined *: All major volume in platoon

Intersection	
Int Delay, s/veh	6.8

Movement	EBL	EBT	EBR	WBL	WBT	WBR	NBL	NBT	NBR	SBL	SBT	SBR
Lane Configurations												
Traffic Vol, veh/h	45	40	200	5	105	5	185	5	5	5	5	65
Future Vol, veh/h	45	40	200	5	105	5	185	5	5	5	5	65
Conflicting Peds, #/hr	0	0	0	0	0	0	0	0	0	0	0	0
Sign Control	Free	Free	Free	Free	Free	Free	Stop	Stop	Stop	Stop	Stop	Stop
RT Channelized	-	-	None	-	-	None	-	-	None	-	-	None
Storage Length	100	-	-	100	-	-	-	-	-	-	-	-
Veh in Median Storage, #	-	0	-	-	0	-	-	0	-	-	0	-
Grade, %	-	0	-	-	0	-	-	0	-	-	0	-
Peak Hour Factor	92	92	92	92	92	92	92	92	92	92	92	92
Heavy Vehicles, %	2	2	2	2	2	2	2	2	2	2	2	2
Mvmt Flow	49	43	217	5	114	5	201	5	5	5	5	71

Major/Minor	Major1			Major2			Minor1			Minor2		
Conflicting Flow All	119	0	0	260	0	0	415	379	152	382	485	117
Stage 1	-	-	-	-	-	-	250	250	-	127	127	-
Stage 2	-	-	-	-	-	-	165	129	-	255	358	-
Critical Hdwy	4.12	-	-	4.12	-	-	7.12	6.52	6.22	7.12	6.52	6.22
Critical Hdwy Stg 1	-	-	-	-	-	-	6.12	5.52	-	6.12	5.52	-
Critical Hdwy Stg 2	-	-	-	-	-	-	6.12	5.52	-	6.12	5.52	-
Follow-up Hdwy	2.218	-	-	2.218	-	-	3.518	4.018	3.318	3.518	4.018	3.318
Pot Cap-1 Maneuver	1469	-	-	1304	-	-	548	553	894	576	482	935
Stage 1	-	-	-	-	-	-	754	700	-	877	791	-
Stage 2	-	-	-	-	-	-	837	789	-	749	628	-
Platoon blocked, %		-	-		-	-						
Mov Cap-1 Maneuver	1469	-	-	1304	-	-	488	533	894	552	464	935
Mov Cap-2 Maneuver	-	-	-	-	-	-	488	533	-	552	464	-
Stage 1	-	-	-	-	-	-	729	677	-	848	788	-
Stage 2	-	-	-	-	-	-	765	786	-	714	607	-

Approach	EB	WB	NB	SB
HCM Control Delay, s	1.2	0.3	17.6	9.8
HCM LOS			C	A

Minor Lane/Major Mvmt	NBLn1	EBL	EBT	EBR	WBL	WBT	WBR	SBLn1
Capacity (veh/h)	495	1469	-	-	1304	-	-	839
HCM Lane V/C Ratio	0.428	0.033	-	-	0.004	-	-	0.097
HCM Control Delay (s)	17.6	7.5	-	-	7.8	-	-	9.8
HCM Lane LOS	C	A	-	-	A	-	-	A
HCM 95th %tile Q(veh)	2.1	0.1	-	-	0	-	-	0.3

Intersection	
Int Delay, s/veh	6.5

Movement	EBL	EBT	EBR	WBL	WBT	WBR	NBL	NBT	NBR	SBL	SBT	SBR
Lane Configurations												
Traffic Vol, veh/h	10	20	20	5	10	5	70	5	5	5	5	25
Future Vol, veh/h	10	20	20	5	10	5	70	5	5	5	5	25
Conflicting Peds, #/hr	0	0	0	0	0	0	0	0	0	0	0	0
Sign Control	Free	Free	Free	Free	Free	Free	Stop	Stop	Stop	Stop	Stop	Stop
RT Channelized	-	-	None	-	-	None	-	-	None	-	-	None
Storage Length	-	-	-	-	-	-	-	-	-	-	-	-
Veh in Median Storage, #	-	0	-	-	0	-	-	0	-	-	0	-
Grade, %	-	0	-	-	0	-	-	0	-	-	0	-
Peak Hour Factor	92	92	92	92	92	92	92	92	92	92	92	92
Heavy Vehicles, %	2	2	2	2	2	2	2	2	2	2	2	2
Mvmt Flow	11	22	22	5	11	5	76	5	5	5	5	27

Major/Minor	Major1			Major2			Minor1			Minor2		
Conflicting Flow All	16	0	0	44	0	0	95	81	33	84	90	14
Stage 1	-	-	-	-	-	-	55	55	-	24	24	-
Stage 2	-	-	-	-	-	-	40	26	-	60	66	-
Critical Hdwy	4.12	-	-	4.12	-	-	7.12	6.52	6.22	7.12	6.52	6.22
Critical Hdwy Stg 1	-	-	-	-	-	-	6.12	5.52	-	6.12	5.52	-
Critical Hdwy Stg 2	-	-	-	-	-	-	6.12	5.52	-	6.12	5.52	-
Follow-up Hdwy	2.218	-	-	2.218	-	-	3.518	4.018	3.318	3.518	4.018	3.318
Pot Cap-1 Maneuver	1602	-	-	1564	-	-	888	809	1041	903	800	1066
Stage 1	-	-	-	-	-	-	957	849	-	994	875	-
Stage 2	-	-	-	-	-	-	975	874	-	951	840	-
Platoon blocked, %		-	-		-	-						
Mov Cap-1 Maneuver	1602	-	-	1564	-	-	854	801	1041	887	792	1066
Mov Cap-2 Maneuver	-	-	-	-	-	-	854	801	-	887	792	-
Stage 1	-	-	-	-	-	-	950	843	-	987	872	-
Stage 2	-	-	-	-	-	-	941	871	-	933	834	-

Approach	EB	WB	NB	SB
HCM Control Delay, s	1.5	1.8	9.7	8.8
HCM LOS			A	A

Minor Lane/Major Mvmt	NBLn1	EBL	EBT	EBR	WBL	WBT	WBR	SBLn1
Capacity (veh/h)	860	1602	-	-	1564	-	-	989
HCM Lane V/C Ratio	0.101	0.007	-	-	0.003	-	-	0.038
HCM Control Delay (s)	9.7	7.3	0	-	7.3	0	-	8.8
HCM Lane LOS	A	A	A	-	A	A	-	A
HCM 95th %tile Q(veh)	0.3	0	-	-	0	-	-	0.1

Intersection	
Int Delay, s/veh	2.1

Movement	EBT	EBR	WBL	WBT	NBL	NBR
Lane Configurations						
Traffic Vol, veh/h	20	10	5	75	25	5
Future Vol, veh/h	20	10	5	75	25	5
Conflicting Peds, #/hr	0	0	0	0	0	0
Sign Control	Free	Free	Free	Free	Stop	Stop
RT Channelized	-	None	-	None	-	Stop
Storage Length	-	-	-	-	0	-
Veh in Median Storage, #	0	-	-	0	0	-
Grade, %	0	-	-	0	0	-
Peak Hour Factor	92	92	92	92	92	92
Heavy Vehicles, %	2	2	2	2	2	2
Mvmt Flow	22	11	5	82	27	5

Major/Minor	Major1		Major2		Minor1	
Conflicting Flow All	0	0	33	0	120	28
Stage 1	-	-	-	-	28	-
Stage 2	-	-	-	-	92	-
Critical Hdwy	-	-	4.12	-	6.42	6.22
Critical Hdwy Stg 1	-	-	-	-	5.42	-
Critical Hdwy Stg 2	-	-	-	-	5.42	-
Follow-up Hdwy	-	-	2.218	-	3.518	3.318
Pot Cap-1 Maneuver	-	-	1579	-	876	1047
Stage 1	-	-	-	-	995	-
Stage 2	-	-	-	-	932	-
Platoon blocked, %	-	-		-		
Mov Cap-1 Maneuver	-	-	1579	-	873	1047
Mov Cap-2 Maneuver	-	-	-	-	873	-
Stage 1	-	-	-	-	992	-
Stage 2	-	-	-	-	932	-

Approach	EB	WB	NB
HCM Control Delay, s	0	0.5	8.5
HCM LOS			A

Minor Lane/Major Mvmt	NBLn1	EBT	EBR	WBL	WBT
Capacity (veh/h)	1048	-	-	1579	-
HCM Lane V/C Ratio	0.031	-	-	0.003	-
HCM Control Delay (s)	8.5	-	-	7.3	0
HCM Lane LOS	A	-	-	A	A
HCM 95th %tile Q(veh)	0.1	-	-	0	-

Intersection	
Intersection Delay, s/veh	3.6
Intersection LOS	A

Approach	EB	WB	NB
Entry Lanes	1	1	1
Conflicting Circle Lanes	1	1	1
Adj Approach Flow, veh/h	27	48	43
Demand Flow Rate, veh/h	27	49	44
Vehicles Circulating, veh/h	5	39	16
Vehicles Exiting, veh/h	83	21	16
Follow-Up Headway, s	3.186	3.186	3.186
Ped Vol Crossing Leg, #/h	0	0	0
Ped Cap Adj	1.000	1.000	1.000
Approach Delay, s/veh	3.4	3.8	3.6
Approach LOS	A	A	A

Lane	Left	Left	Left
Designated Moves	TR	LT	LR
Assumed Moves	TR	LT	LR
RT Channelized			
Lane Util	1.000	1.000	1.000
Critical Headway, s	5.193	5.193	5.193
Entry Flow, veh/h	27	49	44
Cap Entry Lane, veh/h	1124	1087	1112
Entry HV Adj Factor	0.988	0.982	0.977
Flow Entry, veh/h	27	48	43
Cap Entry, veh/h	1111	1068	1087
V/C Ratio	0.024	0.045	0.040
Control Delay, s/veh	3.4	3.8	3.6
LOS	A	A	A
95th %tile Queue, veh	0	0	0

APPENDIX C

LEVEL OF SERVICE CALCULATIONS

- Future Year 2027 Scenario 4 PM Peak

HCM 2010 Signalized Intersection Summary
1: Napilihau Street

10/05/2017

Movement	EBL	EBT	EBR	WBL	WBT	WBR	NBL	NBT	NBR	SBL	SBT	SBR
Lane Configurations												
Traffic Volume (veh/h)	55	25	420	65	25	5	420	300	70	10	410	75
Future Volume (veh/h)	55	25	420	65	25	5	420	300	70	10	410	75
Number	7	4	14	3	8	18	5	2	12	1	6	16
Initial Q (Qb), veh	0	0	0	0	0	0	0	0	0	0	0	0
Ped-Bike Adj(A_pbT)	1.00		1.00	1.00		1.00	1.00		1.00	1.00		1.00
Parking Bus, Adj	1.00	1.00	1.00	1.00	1.00	1.00	1.00	1.00	1.00	1.00	1.00	1.00
Adj Sat Flow, veh/h/ln	1900	1863	1863	1863	1863	1900	1863	1863	1863	1863	1863	1863
Adj Flow Rate, veh/h	60	27	27	71	27	1	457	326	50	11	446	25
Adj No. of Lanes	0	1	1	1	1	0	1	1	1	1	1	1
Peak Hour Factor	0.92	0.92	0.92	0.92	0.92	0.92	0.92	0.92	0.92	0.92	0.92	0.92
Percent Heavy Veh, %	2	2	2	2	2	2	2	2	2	2	2	2
Cap, veh/h	199	73	181	198	204	8	523	1169	994	15	636	540
Arrive On Green	0.11	0.11	0.11	0.11	0.11	0.11	0.29	0.63	0.63	0.01	0.34	0.34
Sat Flow, veh/h	908	634	1583	1345	1785	66	1774	1863	1583	1774	1863	1583
Grp Volume(v), veh/h	87	0	27	71	0	28	457	326	50	11	446	25
Grp Sat Flow(s),veh/h/ln	1542	0	1583	1345	0	1851	1774	1863	1583	1774	1863	1583
Q Serve(g_s), s	2.4	0.0	1.0	3.3	0.0	0.9	15.7	5.1	0.8	0.4	13.3	0.7
Cycle Q Clear(g_c), s	3.3	0.0	1.0	6.6	0.0	0.9	15.7	5.1	0.8	0.4	13.3	0.7
Prop In Lane	0.69		1.00	1.00		0.04	1.00		1.00	1.00		1.00
Lane Grp Cap(c), veh/h	272	0	181	198	0	212	523	1169	994	15	636	540
V/C Ratio(X)	0.32	0.00	0.15	0.36	0.00	0.13	0.87	0.28	0.05	0.74	0.70	0.05
Avail Cap(c_a), veh/h	661	0	593	547	0	693	830	2296	1952	415	1860	1581
HCM Platoon Ratio	1.00	1.00	1.00	1.00	1.00	1.00	1.00	1.00	1.00	1.00	1.00	1.00
Upstream Filter(I)	1.00	0.00	1.00	1.00	0.00	1.00	1.00	1.00	1.00	1.00	1.00	1.00
Uniform Delay (d), s/veh	26.5	0.0	25.6	29.7	0.0	25.5	21.5	5.4	4.6	31.7	18.3	14.1
Incr Delay (d2), s/veh	0.7	0.0	0.4	1.1	0.0	0.3	6.4	0.3	0.0	52.7	3.0	0.1
Initial Q Delay(d3),s/veh	0.0	0.0	0.0	0.0	0.0	0.0	0.0	0.0	0.0	0.0	0.0	0.0
%ile BackOfQ(50%),veh/ln	1.5	0.0	0.4	1.3	0.0	0.5	8.5	2.6	0.3	0.4	7.3	0.3
LnGrp Delay(d),s/veh	27.2	0.0	25.9	30.8	0.0	25.8	27.8	5.7	4.6	84.4	21.3	14.2
LnGrp LOS	C		C	C		C	C	A	A	F	C	B
Approach Vol, veh/h		114			99			833			482	
Approach Delay, s/veh		26.9			29.4			17.8			22.4	
Approach LOS		C			C			B			C	

Timer	1	2	3	4	5	6	7	8
Assigned Phs	1	2		4	5	6		8
Phs Duration (G+Y+Rc), s	5.5	46.2		12.3	23.9	27.9		12.3
Change Period (Y+Rc), s	5.0	6.0		5.0	5.0	6.0		5.0
Max Green Setting (Gmax), s	15.0	79.0		24.0	30.0	64.0		24.0
Max Q Clear Time (g_c+I1), s	2.4	7.1		5.3	17.7	15.3		8.6
Green Ext Time (p_c), s	0.0	4.9		0.5	1.2	6.6		0.2

Intersection Summary	
HCM 2010 Ctrl Delay	20.6
HCM 2010 LOS	C

Movement	EBL	EBT	EBR	WBL	WBT	WBR	NBL	NBT	NBR	SBL	SBT	SBR
Lane Configurations												
Traffic Volume (veh/h)	75	20	175	55	15	10	220	725	50	25	770	80
Future Volume (veh/h)	75	20	175	55	15	10	220	725	50	25	770	80
Number	7	4	14	3	8	18	5	2	12	1	6	16
Initial Q (Qb), veh	0	0	0	0	0	0	0	0	0	0	0	0
Ped-Bike Adj(A_pbT)	1.00		1.00	1.00		1.00	1.00		1.00	1.00		1.00
Parking Bus, Adj	1.00	1.00	1.00	1.00	1.00	1.00	1.00	1.00	1.00	1.00	1.00	1.00
Adj Sat Flow, veh/h/ln	1900	1863	1863	1863	1863	1900	1863	1863	1863	1863	1863	1863
Adj Flow Rate, veh/h	82	22	11	60	16	1	239	788	0	27	837	51
Adj No. of Lanes	0	1	1	1	1	0	1	1	1	1	1	1
Peak Hour Factor	0.92	0.92	0.92	0.92	0.92	0.92	0.92	0.92	0.92	0.92	0.92	0.92
Percent Heavy Veh, %	2	2	2	2	2	2	2	2	2	2	2	2
Cap, veh/h	247	55	214	210	235	15	360	1115	947	351	976	826
Arrive On Green	0.14	0.14	0.14	0.14	0.14	0.14	0.09	0.60	0.00	0.02	0.52	0.52
Sat Flow, veh/h	1087	406	1583	1370	1735	108	1774	1863	1583	1774	1863	1577
Grp Volume(v), veh/h	104	0	11	60	0	17	239	788	0	27	837	51
Grp Sat Flow(s),veh/h/ln	1493	0	1583	1370	0	1844	1774	1863	1583	1774	1863	1577
Q Serve(g_s), s	3.6	0.0	0.4	2.7	0.0	0.5	3.6	19.0	0.0	0.5	25.0	1.0
Cycle Q Clear(g_c), s	4.1	0.0	0.4	6.8	0.0	0.5	3.6	19.0	0.0	0.5	25.0	1.0
Prop In Lane	0.79		1.00	1.00		0.06	1.00		1.00	1.00		1.00
Lane Grp Cap(c), veh/h	302	0	214	210	0	249	360	1115	947	351	976	826
V/C Ratio(X)	0.34	0.00	0.05	0.29	0.00	0.07	0.66	0.71	0.00	0.08	0.86	0.06
Avail Cap(c_a), veh/h	674	0	615	557	0	716	610	1476	1255	733	1476	1250
HCM Platoon Ratio	1.00	1.00	1.00	1.00	1.00	1.00	1.00	1.00	1.00	1.00	1.00	1.00
Upstream Filter(I)	1.00	0.00	1.00	1.00	0.00	1.00	1.00	1.00	0.00	1.00	1.00	1.00
Uniform Delay (d), s/veh	25.8	0.0	24.2	29.0	0.0	24.3	13.0	9.0	0.0	8.5	13.2	7.5
Incr Delay (d2), s/veh	0.7	0.0	0.1	0.7	0.0	0.1	2.1	1.0	0.0	0.1	3.4	0.0
Initial Q Delay(d3),s/veh	0.0	0.0	0.0	0.0	0.0	0.0	0.0	0.0	0.0	0.0	0.0	0.0
%ile BackOfQ(50%),veh/ln	1.8	0.0	0.2	1.1	0.0	0.3	2.5	10.0	0.0	0.2	13.5	0.4
LnGrp Delay(d),s/veh	26.5	0.0	24.3	29.7	0.0	24.4	15.1	10.0	0.0	8.6	16.6	7.6
LnGrp LOS	C		C	C		C	B	B		A	B	A
Approach Vol, veh/h		115			77			1027			915	
Approach Delay, s/veh		26.3			28.6			11.2			15.9	
Approach LOS		C			C			B			B	

Timer	1	2	3	4	5	6	7	8
Assigned Phs	1	2		4	5	6		8
Phs Duration (G+Y+Rc), s	6.1	44.5		13.7	10.9	39.7		13.7
Change Period (Y+Rc), s	5.0	6.0		5.0	5.0	6.0		5.0
Max Green Setting (Gmax), s	15.0	51.0		25.0	15.0	51.0		25.0
Max Q Clear Time (g_c+I1), s	2.5	21.0		6.1	5.6	27.0		8.8
Green Ext Time (p_c), s	0.0	6.3		0.5	0.5	6.7		0.2

Intersection Summary	
HCM 2010 Ctrl Delay	14.7
HCM 2010 LOS	B

Movement	EBL	EBT	EBR	WBL	WBT	WBR	NBL	NBT	NBR	SBL	SBT	SBR
Lane Configurations												
Traffic Volume (veh/h)	60	50	100	145	50	90	170	915	155	135	865	75
Future Volume (veh/h)	60	50	100	145	50	90	170	915	155	135	865	75
Number	7	4	14	3	8	18	5	2	12	1	6	16
Initial Q (Qb), veh	0	0	0	0	0	0	0	0	0	0	0	0
Ped-Bike Adj(A_pbT)	1.00		0.96	1.00		0.99	1.00		1.00	1.00		1.00
Parking Bus, Adj	1.00	1.00	1.00	1.00	1.00	1.00	1.00	1.00	1.00	1.00	1.00	1.00
Adj Sat Flow, veh/h/ln	1863	1863	1900	1863	1863	1863	1863	1863	1863	1863	1863	1863
Adj Flow Rate, veh/h	65	54	62	158	54	9	185	995	131	147	940	42
Adj No. of Lanes	1	1	0	1	1	1	1	1	1	1	1	1
Peak Hour Factor	0.92	0.92	0.92	0.92	0.92	0.92	0.92	0.92	0.92	0.92	0.92	0.92
Percent Heavy Veh, %	2	2	2	2	2	2	2	2	2	2	2	2
Cap, veh/h	84	73	84	185	282	237	209	1049	892	170	1008	855
Arrive On Green	0.05	0.09	0.09	0.10	0.15	0.15	0.12	0.56	0.56	0.10	0.54	0.54
Sat Flow, veh/h	1774	775	890	1774	1863	1561	1774	1863	1583	1774	1863	1580
Grp Volume(v), veh/h	65	0	116	158	54	9	185	995	131	147	940	42
Grp Sat Flow(s),veh/h/ln	1774	0	1665	1774	1863	1561	1774	1863	1583	1774	1863	1580
Q Serve(g_s), s	5.1	0.0	9.5	12.3	3.6	0.7	14.4	70.4	5.5	11.5	65.7	1.8
Cycle Q Clear(g_c), s	5.1	0.0	9.5	12.3	3.6	0.7	14.4	70.4	5.5	11.5	65.7	1.8
Prop In Lane	1.00		0.53	1.00		1.00	1.00		1.00	1.00		1.00
Lane Grp Cap(c), veh/h	84	0	158	185	282	237	209	1049	892	170	1008	855
V/C Ratio(X)	0.77	0.00	0.74	0.85	0.19	0.04	0.89	0.95	0.15	0.87	0.93	0.05
Avail Cap(c_a), veh/h	404	0	213	404	282	237	240	1139	968	177	1073	910
HCM Platoon Ratio	1.00	1.00	1.00	1.00	1.00	1.00	1.00	1.00	1.00	1.00	1.00	1.00
Upstream Filter(I)	1.00	0.00	1.00	1.00	1.00	1.00	1.00	1.00	1.00	1.00	1.00	1.00
Uniform Delay (d), s/veh	66.2	0.0	61.9	61.9	52.1	50.9	61.1	28.8	14.6	62.7	29.9	15.2
Incr Delay (d2), s/veh	13.9	0.0	8.5	10.6	0.3	0.1	27.9	15.3	0.1	32.6	13.7	0.0
Initial Q Delay(d3),s/veh	0.0	0.0	0.0	0.0	0.0	0.0	0.0	0.0	0.0	0.0	0.0	0.0
%ile BackOfQ(50%),veh/ln	2.8	0.0	4.8	6.6	1.9	0.3	8.7	40.4	2.4	7.2	37.5	0.8
LnGrp Delay(d),s/veh	80.1	0.0	70.4	72.5	52.5	51.0	89.0	44.1	14.7	95.3	43.6	15.2
LnGrp LOS	F		E	E	D	D	F	D	B	F	D	B
Approach Vol, veh/h		181			221			1311			1129	
Approach Delay, s/veh		73.9			66.8			47.5			49.2	
Approach LOS		E			E			D			D	

Timer	1	2	3	4	5	6	7	8
Assigned Phs	1	2	3	4	5	6	7	8
Phs Duration (G+Y+Rc), s	18.5	84.2	19.7	18.3	21.5	81.1	11.7	26.3
Change Period (Y+Rc), s	5.0	5.0	5.0	5.0	5.0	5.0	5.0	5.0
Max Green Setting (Gmax), s	14.0	86.0	32.0	18.0	19.0	81.0	32.0	18.0
Max Q Clear Time (g_c+I1), s	13.5	72.4	14.3	11.5	16.4	67.7	7.1	5.6
Green Ext Time (p_c), s	0.0	6.8	0.4	0.3	0.1	6.0	0.1	0.2

Intersection Summary	
HCM 2010 Ctrl Delay	51.4
HCM 2010 LOS	D

Notes

Movement	EBL	EBT	EBR	WBL	WBT	WBR	NBL	NBT	NBR	SBL	SBT	SBR
Lane Configurations												
Traffic Volume (veh/h)	95	5	600	80	10	10	605	1135	10	5	1055	25
Future Volume (veh/h)	95	5	600	80	10	10	605	1135	10	5	1055	25
Number	3	8	18	7	4	14	1	6	16	5	2	12
Initial Q (Qb), veh	0	0	0	0	0	0	0	0	0	0	0	0
Ped-Bike Adj(A_pbT)	1.00		1.00	1.00		1.00	1.00		1.00	1.00		1.00
Parking Bus, Adj	1.00	1.00	1.00	1.00	1.00	1.00	1.00	1.00	1.00	1.00	1.00	1.00
Adj Sat Flow, veh/h/ln	1900	1863	1863	1900	1863	1900	1863	1863	1900	1863	1863	1863
Adj Flow Rate, veh/h	103	5	0	87	11	9	658	1234	11	5	1147	6
Adj No. of Lanes	0	1	1	0	1	0	1	2	0	1	2	1
Peak Hour Factor	0.92	0.92	0.92	0.92	0.92	0.92	0.92	0.92	0.92	0.92	0.92	0.92
Percent Heavy Veh, %	2	2	2	2	2	2	2	2	2	2	2	2
Cap, veh/h	184	6	137	173	15	12	692	2820	25	7	1410	631
Arrive On Green	0.09	0.09	0.00	0.09	0.09	0.09	0.39	0.78	0.78	0.00	0.40	0.40
Sat Flow, veh/h	1443	70	1583	1374	174	142	1774	3595	32	1774	3539	1583
Grp Volume(v), veh/h	108	0	0	107	0	0	658	607	638	5	1147	6
Grp Sat Flow(s),veh/h/ln	1513	0	1583	1690	0	0	1774	1770	1857	1774	1770	1583
Q Serve(g_s), s	1.2	0.0	0.0	0.0	0.0	0.0	43.2	13.5	13.5	0.3	34.6	0.3
Cycle Q Clear(g_c), s	8.1	0.0	0.0	6.9	0.0	0.0	43.2	13.5	13.5	0.3	34.6	0.3
Prop In Lane	0.95		1.00	0.81		0.08	1.00		0.02	1.00		1.00
Lane Grp Cap(c), veh/h	202	0	137	215	0	0	692	1388	1457	7	1410	631
V/C Ratio(X)	0.53	0.00	0.00	0.50	0.00	0.00	0.95	0.44	0.44	0.73	0.81	0.01
Avail Cap(c_a), veh/h	431	0	396	416	0	0	1049	1388	1457	1049	1680	752
HCM Platoon Ratio	1.00	1.00	1.00	1.00	1.00	1.00	1.00	1.00	1.00	1.00	1.00	1.00
Upstream Filter(I)	1.00	0.00	0.00	1.00	0.00	0.00	1.00	1.00	1.00	1.00	1.00	1.00
Uniform Delay (d), s/veh	53.3	0.0	0.0	52.9	0.0	0.0	35.5	4.2	4.2	59.8	32.2	21.8
Incr Delay (d2), s/veh	2.2	0.0	0.0	1.8	0.0	0.0	10.6	0.5	0.4	43.1	3.5	0.0
Initial Q Delay(d3),s/veh	0.0	0.0	0.0	0.0	0.0	0.0	0.0	0.0	0.0	0.0	0.0	0.0
%ile BackOfQ(50%),veh/ln	3.6	0.0	0.0	3.5	0.0	0.0	23.1	6.6	6.9	0.2	17.6	0.1
LnGrp Delay(d),s/veh	55.4	0.0	0.0	54.6	0.0	0.0	46.1	4.7	4.7	102.9	35.7	21.8
LnGrp LOS	E			D			D	A	A	F	D	C
Approach Vol, veh/h		108			107			1903			1158	
Approach Delay, s/veh		55.4			54.6			19.0			35.9	
Approach LOS		E			D			B			D	

Timer	1	2	3	4	5	6	7	8
Assigned Phs	1	2		4	5	6		8
Phs Duration (G+Y+Rc), s	50.9	53.8		15.4	4.5	100.2		15.4
Change Period (Y+Rc), s	4.0	6.0		5.0	4.0	6.0		5.0
Max Green Setting (Gmax), s	71.0	57.0		27.0	71.0	57.0		30.0
Max Q Clear Time (g_c+I1), s	45.2	36.6		8.9	2.3	15.5		10.1
Green Ext Time (p_c), s	1.7	11.2		0.3	0.0	16.8		0.3

Intersection Summary	
HCM 2010 Ctrl Delay	27.4
HCM 2010 LOS	C

Notes

Movement	EBL	EBT	EBR	WBL	WBT	WBR	NBL	NBT	NBR	SBL	SBT	SBR
Lane Configurations												
Traffic Volume (veh/h)	55	5	140	15	0	5	135	1685	10	10	1745	60
Future Volume (veh/h)	55	5	140	15	0	5	135	1685	10	10	1745	60
Number	3	8	18	7	4	14	1	6	16	5	2	12
Initial Q (Qb), veh	0	0	0	0	0	0	0	0	0	0	0	0
Ped-Bike Adj(A_pbT)	0.97		0.96	0.97		0.96	1.00		1.00	1.00		1.00
Parking Bus, Adj	1.00	1.00	1.00	1.00	1.00	1.00	1.00	1.00	1.00	1.00	1.00	1.00
Adj Sat Flow, veh/h/ln	1900	1863	1863	1900	1863	1900	1863	1863	1900	1863	1863	1863
Adj Flow Rate, veh/h	60	5	5	16	0	1	147	1832	11	11	1897	41
Adj No. of Lanes	0	1	1	0	1	0	1	2	0	1	2	1
Peak Hour Factor	0.92	0.92	0.92	0.92	0.92	0.92	0.92	0.92	0.92	0.92	0.92	0.92
Percent Heavy Veh, %	2	2	2	2	2	2	2	2	2	2	2	2
Cap, veh/h	220	16	171	170	2	7	177	2697	16	14	2322	1038
Arrive On Green	0.12	0.11	0.11	0.12	0.00	0.11	0.10	0.75	0.75	0.01	0.66	0.66
Sat Flow, veh/h	1380	139	1520	923	17	59	1774	3607	22	1774	3539	1582
Grp Volume(v), veh/h	65	0	5	17	0	0	147	898	945	11	1897	41
Grp Sat Flow(s),veh/h/ln	1519	0	1520	999	0	0	1774	1770	1859	1774	1770	1582
Q Serve(g_s), s	0.0	0.0	0.3	1.1	0.0	0.0	8.6	27.6	27.7	0.7	42.1	1.0
Cycle Q Clear(g_c), s	3.6	0.0	0.3	4.7	0.0	0.0	8.6	27.6	27.7	0.7	42.1	1.0
Prop In Lane	0.92		1.00	0.94		0.06	1.00		0.01	1.00		1.00
Lane Grp Cap(c), veh/h	250	0	171	188	0	0	177	1323	1390	14	2322	1038
V/C Ratio(X)	0.26	0.00	0.03	0.09	0.00	0.00	0.83	0.68	0.68	0.79	0.82	0.04
Avail Cap(c_a), veh/h	396	0	330	330	0	0	351	1435	1507	184	2536	1134
HCM Platoon Ratio	1.00	1.00	1.00	1.00	1.00	1.00	1.00	1.00	1.00	1.00	1.00	1.00
Upstream Filter(I)	1.00	0.00	1.00	1.00	0.00	0.00	1.00	1.00	1.00	1.00	1.00	1.00
Uniform Delay (d), s/veh	43.0	0.0	41.9	44.6	0.0	0.0	46.9	6.8	6.9	52.5	13.5	6.4
Incr Delay (d2), s/veh	0.2	0.0	0.0	0.1	0.0	0.0	3.8	1.7	1.6	29.9	2.5	0.0
Initial Q Delay(d3),s/veh	0.0	0.0	0.0	0.0	0.0	0.0	0.0	0.0	0.0	0.0	0.0	0.0
%ile BackOfQ(50%),veh/ln	1.7	0.0	0.1	0.5	0.0	0.0	4.4	13.8	14.5	0.4	21.1	0.4
LnGrp Delay(d),s/veh	43.2	0.0	41.9	44.6	0.0	0.0	50.7	8.5	8.5	82.4	16.0	6.5
LnGrp LOS	D		D	D			D	A	A	F	B	A
Approach Vol, veh/h		70			17			1990			1949	
Approach Delay, s/veh		43.1			44.6			11.6			16.2	
Approach LOS		D			D			B			B	

Timer	1	2	3	4	5	6	7	8
Assigned Phs	1	2		4	5	6		8
Phs Duration (G+Y+Rc), s	14.6	74.6		16.9	4.8	84.3		16.9
Change Period (Y+Rc), s	4.0	5.0		5.0	4.0	5.0		5.0
Max Green Setting (Gmax), s	21.6	76.0		23.0	11.0	86.0		23.0
Max Q Clear Time (g_c+I1), s	10.6	44.1		6.7	2.7	29.7		5.6
Green Ext Time (p_c), s	0.1	25.4		0.0	0.0	36.9		0.1

Intersection Summary	
HCM 2010 Ctrl Delay	14.5
HCM 2010 LOS	B

Movement	EBL	EBT	EBR	WBL	WBT	WBR	NBL	NBT	NBR	SBL	SBT	SBR
Lane Configurations												
Traffic Volume (veh/h)	85	5	175	70	5	50	125	1690	60	35	1890	105
Future Volume (veh/h)	85	5	175	70	5	50	125	1690	60	35	1890	105
Number	3	8	18	7	4	14	1	6	16	5	2	12
Initial Q (Qb), veh	0	0	0	0	0	0	0	0	0	0	0	0
Ped-Bike Adj(A_pbT)	0.99		0.99	0.99		0.99	1.00		1.00	1.00		1.00
Parking Bus, Adj	1.00	1.00	1.00	1.00	1.00	1.00	1.00	1.00	1.00	1.00	1.00	1.00
Adj Sat Flow, veh/h/ln	1900	1863	1863	1863	1863	1900	1863	1863	1863	1863	1863	1863
Adj Flow Rate, veh/h	92	5	44	76	5	2	136	1837	48	38	2054	92
Adj No. of Lanes	0	1	1	1	1	0	1	2	1	1	2	1
Peak Hour Factor	0.92	0.92	0.92	0.92	0.92	0.92	0.92	0.92	0.92	0.92	0.92	0.92
Percent Heavy Veh, %	2	2	2	2	2	2	2	2	2	2	2	2
Cap, veh/h	222	10	216	138	174	70	157	2632	1177	49	2415	1081
Arrive On Green	0.14	0.14	0.14	0.14	0.14	0.14	0.09	0.74	0.74	0.03	0.68	0.68
Sat Flow, veh/h	1300	71	1563	1338	1261	505	1774	3539	1582	1774	3539	1583
Grp Volume(v), veh/h	97	0	44	76	0	7	136	1837	48	38	2054	92
Grp Sat Flow(s),veh/h/ln	1371	0	1563	1338	0	1766	1774	1770	1582	1774	1770	1583
Q Serve(g_s), s	10.5	0.0	4.1	9.2	0.0	0.6	12.5	45.7	1.3	3.5	72.5	3.2
Cycle Q Clear(g_c), s	11.1	0.0	4.1	20.3	0.0	0.6	12.5	45.7	1.3	3.5	72.5	3.2
Prop In Lane	0.95		1.00	1.00		0.29	1.00		1.00	1.00		1.00
Lane Grp Cap(c), veh/h	240	0	216	138	0	244	157	2632	1177	49	2415	1081
V/C Ratio(X)	0.40	0.00	0.20	0.55	0.00	0.03	0.86	0.70	0.04	0.78	0.85	0.09
Avail Cap(c_a), veh/h	250	0	227	148	0	257	280	2632	1177	108	2415	1081
HCM Platoon Ratio	1.00	1.00	1.00	1.00	1.00	1.00	1.00	1.00	1.00	1.00	1.00	1.00
Upstream Filter(I)	1.00	0.00	1.00	1.00	0.00	1.00	0.60	0.60	0.60	1.00	1.00	1.00
Uniform Delay (d), s/veh	65.9	0.0	63.1	75.5	0.0	61.6	74.2	11.3	5.6	79.7	19.8	8.8
Incr Delay (d2), s/veh	1.1	0.0	0.5	3.7	0.0	0.0	3.3	0.9	0.0	9.3	4.0	0.2
Initial Q Delay(d3),s/veh	0.0	0.0	0.0	0.0	0.0	0.0	0.0	0.0	0.0	0.0	0.0	0.0
%ile BackOfQ(50%),veh/ln	4.1	0.0	1.8	3.6	0.0	0.3	6.3	22.5	0.6	1.8	36.4	1.5
LnGrp Delay(d),s/veh	67.0	0.0	63.6	79.2	0.0	61.6	77.5	12.2	5.6	89.0	23.8	9.0
LnGrp LOS	E		E	E		E	E	B	A	F	C	A
Approach Vol, veh/h		141			83			2021			2184	
Approach Delay, s/veh		65.9			77.7			16.5			24.3	
Approach LOS		E			E			B			C	

Timer	1	2	3	4	5	6	7	8
Assigned Phs	1	2		4	5	6		8
Phs Duration (G+Y+Rc), s	18.6	118.6		27.8	8.6	128.7		27.8
Change Period (Y+Rc), s	4.0	6.0		5.0	4.0	6.0		5.0
Max Green Setting (Gmax), s	26.0	100.0		24.0	10.0	116.0		24.0
Max Q Clear Time (g_c+I1), s	14.5	74.5		22.3	5.5	47.7		13.1
Green Ext Time (p_c), s	0.2	22.5		0.0	0.0	42.6		0.3

Intersection Summary	
HCM 2010 Ctrl Delay	23.1
HCM 2010 LOS	C

Movement	EBL	EBT	EBR	WBL	WBT	WBR	NBL	NBT	NBR	SBL	SBT	SBR
Lane Configurations												
Traffic Volume (veh/h)	390	5	740	15	0	5	500	1650	10	80	1845	200
Future Volume (veh/h)	390	5	740	15	0	5	500	1650	10	80	1845	200
Number	3	8	18	7	4	14	1	6	16	5	2	12
Initial Q (Qb), veh	0	0	0	0	0	0	0	0	0	0	0	0
Ped-Bike Adj(A_pbT)	1.00		0.98	1.00		0.94	1.00		1.00	1.00		1.00
Parking Bus, Adj	1.00	1.00	1.00	1.00	1.00	1.00	1.00	1.00	1.00	1.00	1.00	1.00
Adj Sat Flow, veh/h/ln	1863	1863	1863	1900	1863	1900	1863	1863	1900	1863	1863	1863
Adj Flow Rate, veh/h	428	0	662	16	0	1	543	1793	11	87	2005	185
Adj No. of Lanes	2	0	2	0	1	0	2	2	0	1	2	1
Peak Hour Factor	0.92	0.92	0.92	0.92	0.92	0.92	0.92	0.92	0.92	0.92	0.92	0.92
Percent Heavy Veh, %	2	2	2	2	2	2	2	2	2	2	2	2
Cap, veh/h	472	0	946	40	0	3	590	2597	16	112	2166	1174
Arrive On Green	0.13	0.00	0.13	0.02	0.00	0.01	0.17	0.72	0.71	0.06	0.61	0.61
Sat Flow, veh/h	3548	0	3118	1650	0	103	3442	3606	22	1774	3539	1583
Grp Volume(v), veh/h	428	0	662	17	0	0	543	879	925	87	2005	185
Grp Sat Flow(s),veh/h/ln	1774	0	1559	1754	0	0	1721	1770	1859	1774	1770	1583
Q Serve(g_s), s	32.2	0.0	35.0	2.6	0.0	0.0	42.0	74.8	75.1	13.1	137.2	9.3
Cycle Q Clear(g_c), s	32.2	0.0	35.0	2.6	0.0	0.0	42.0	74.8	75.1	13.1	137.2	9.3
Prop In Lane	1.00		1.00	0.94		0.06	1.00		0.01	1.00		1.00
Lane Grp Cap(c), veh/h	472	0	946	43	0	0	590	1274	1338	112	2166	1174
V/C Ratio(X)	0.91	0.00	0.70	0.40	0.00	0.00	0.92	0.69	0.69	0.77	0.93	0.16
Avail Cap(c_a), veh/h	472	0	946	162	0	0	610	1281	1346	177	2288	1228
HCM Platoon Ratio	1.00	1.00	1.00	1.00	1.00	1.00	1.00	1.00	1.00	1.00	1.00	1.00
Upstream Filter(I)	1.00	0.00	1.00	1.00	0.00	0.00	1.00	1.00	1.00	1.00	1.00	1.00
Uniform Delay (d), s/veh	115.7	0.0	84.0	130.2	0.0	0.0	110.3	21.1	21.1	124.9	47.0	10.3
Incr Delay (d2), s/veh	20.7	0.0	2.0	2.2	0.0	0.0	18.5	1.8	1.7	4.2	7.1	0.1
Initial Q Delay(d3),s/veh	0.0	0.0	0.0	0.0	0.0	0.0	0.0	0.0	0.0	0.0	0.0	0.0
%ile BackOfQ(50%),veh/ln	17.2	0.0	22.3	1.3	0.0	0.0	21.6	37.0	38.9	6.6	69.2	6.1
LnGrp Delay(d),s/veh	136.4	0.0	85.9	132.4	0.0	0.0	128.9	22.8	22.8	129.1	54.1	10.3
LnGrp LOS	F		F	F			F	C	C	F	D	B
Approach Vol, veh/h		1090			17			2347			2277	
Approach Delay, s/veh		105.7			132.4			47.3			53.4	
Approach LOS		F			F			D			D	

Timer	1	2	3	4	5	6	7	8
Assigned Phs	1	2		4	5	6		8
Phs Duration (G+Y+Rc), s	50.4	169.7		10.6	21.2	198.9		40.0
Change Period (Y+Rc), s	6.0	6.0		7.0	6.0	6.0		7.0
Max Green Setting (Gmax), s	46.0	173.0		22.0	25.0	194.0		33.0
Max Q Clear Time (g_c+I1), s	44.0	139.2		4.6	15.1	77.1		37.0
Green Ext Time (p_c), s	0.4	24.4		0.0	0.1	29.2		0.0

Intersection Summary	
HCM 2010 Ctrl Delay	61.1
HCM 2010 LOS	E

Notes

Movement	EBL	EBT	EBR	WBL	WBT	WBR	NBL	NBT	NBR	SBL	SBT	SBR
Lane Configurations												
Traffic Volume (veh/h)	10	0	5	90	5	65	10	2110	90	90	2545	5
Future Volume (veh/h)	10	0	5	90	5	65	10	2110	90	90	2545	5
Number	3	8	18	7	4	14	1	6	16	5	2	12
Initial Q (Qb), veh	0	0	0	0	0	0	0	0	0	0	0	0
Ped-Bike Adj(A_pbT)	1.00		1.00	1.00		1.00	1.00		1.00	1.00		1.00
Parking Bus, Adj	1.00	1.00	1.00	1.00	1.00	1.00	1.00	1.00	1.00	1.00	1.00	1.00
Adj Sat Flow, veh/h/ln	1900	1863	1900	1863	1863	1900	1863	1863	1900	1863	1863	1900
Adj Flow Rate, veh/h	11	0	1	98	5	3	11	2293	96	98	2766	5
Adj No. of Lanes	0	1	0	1	1	0	1	2	0	1	2	0
Peak Hour Factor	0.92	0.92	0.92	0.92	0.92	0.92	0.92	0.92	0.92	0.92	0.92	0.92
Percent Heavy Veh, %	2	2	2	2	2	2	2	2	2	2	2	2
Cap, veh/h	155	2	10	176	95	57	22	2638	110	122	2965	5
Arrive On Green	0.09	0.00	0.08	0.09	0.09	0.08	0.02	1.00	1.00	0.07	0.82	0.81
Sat Flow, veh/h	1234	24	114	1410	1092	655	1774	3463	144	1774	3625	7
Grp Volume(v), veh/h	12	0	0	98	0	8	11	1164	1225	98	1350	1421
Grp Sat Flow(s),veh/h/ln	1373	0	0	1410	0	1747	1774	1770	1837	1774	1770	1862
Q Serve(g_s), s	0.9	0.0	0.0	8.0	0.0	0.6	0.9	0.0	0.0	7.9	84.9	85.1
Cycle Q Clear(g_c), s	1.5	0.0	0.0	9.5	0.0	0.6	0.9	0.0	0.0	7.9	84.9	85.1
Prop In Lane	0.92		0.08	1.00		0.38	1.00		0.08	1.00		0.00
Lane Grp Cap(c), veh/h	167	0	0	176	0	152	22	1348	1399	122	1448	1523
V/C Ratio(X)	0.07	0.00	0.00	0.56	0.00	0.05	0.50	0.86	0.88	0.80	0.93	0.93
Avail Cap(c_a), veh/h	278	0	0	287	0	289	61	1348	1399	184	1448	1523
HCM Platoon Ratio	1.00	1.00	1.00	1.00	1.00	1.00	2.00	2.00	2.00	1.00	1.00	1.00
Upstream Filter(I)	1.00	0.00	0.00	1.00	0.00	1.00	0.41	0.41	0.41	1.00	1.00	1.00
Uniform Delay (d), s/veh	61.3	0.0	0.0	64.6	0.0	60.9	70.3	0.0	0.0	66.6	10.1	10.1
Incr Delay (d2), s/veh	0.2	0.0	0.0	2.7	0.0	0.1	2.7	3.3	3.5	8.0	12.3	11.8
Initial Q Delay(d3),s/veh	0.0	0.0	0.0	0.0	0.0	0.0	0.0	0.0	0.0	0.0	0.0	0.0
%ile BackOfQ(50%),veh/ln	0.5	0.0	0.0	4.0	0.0	0.3	0.5	1.2	1.4	4.1	45.4	47.6
LnGrp Delay(d),s/veh	61.5	0.0	0.0	67.4	0.0	61.0	73.0	3.3	3.5	74.5	22.4	22.0
LnGrp LOS	E			E		E	E	A	A	E	C	C
Approach Vol, veh/h		12			106			2400			2869	
Approach Delay, s/veh		61.5			66.9			3.7			24.0	
Approach LOS		E			E			A			C	

Timer	1	2	3	4	5	6	7	8
Assigned Phs	1	2		4	5	6		8
Phs Duration (G+Y+Rc), s	5.8	122.6		16.6	14.0	114.4		16.6
Change Period (Y+Rc), s	4.0	5.0		5.0	4.0	5.0		5.0
Max Green Setting (Gmax), s	5.0	103.0		23.0	15.0	93.0		23.0
Max Q Clear Time (g_c+I1), s	2.9	87.1		11.5	9.9	2.0		3.5
Green Ext Time (p_c), s	0.0	15.7		0.2	0.1	77.2		0.0

Intersection Summary	
HCM 2010 Ctrl Delay	15.9
HCM 2010 LOS	B

Movement	EBL	EBT	EBR	WBL	WBT	WBR	NBL	NBT	NBR	SBL	SBT	SBR
Lane Configurations												
Traffic Volume (veh/h)	195	15	10	60	5	10	5	2015	20	5	2180	340
Future Volume (veh/h)	195	15	10	60	5	10	5	2015	20	5	2180	340
Number	3	8	18	7	4	14	1	6	16	5	2	12
Initial Q (Qb), veh	0	0	0	0	0	0	0	0	0	0	0	0
Ped-Bike Adj(A_pbT)	1.00		1.00	1.00		1.00	1.00		1.00	1.00		1.00
Parking Bus, Adj	1.00	1.00	1.00	1.00	1.00	1.00	1.00	1.00	1.00	1.00	1.00	1.00
Adj Sat Flow, veh/h/ln	1900	1863	1900	1900	1863	1900	1863	1863	1900	1863	1863	1863
Adj Flow Rate, veh/h	212	16	9	65	5	7	5	2190	21	5	2370	296
Adj No. of Lanes	0	1	0	0	1	0	1	2	0	1	2	1
Peak Hour Factor	0.92	0.92	0.92	0.92	0.92	0.92	0.92	0.92	0.92	0.92	0.92	0.92
Percent Heavy Veh, %	2	2	2	2	2	2	2	2	2	2	2	2
Cap, veh/h	284	18	10	292	23	27	7	2639	25	7	2600	1163
Arrive On Green	0.18	0.18	0.17	0.18	0.18	0.17	0.01	0.98	0.97	0.00	0.73	0.73
Sat Flow, veh/h	1326	100	56	1379	130	151	1774	3592	34	1774	3539	1583
Grp Volume(v), veh/h	237	0	0	77	0	0	5	1077	1134	5	2370	296
Grp Sat Flow(s),veh/h/ln	1482	0	0	1660	0	0	1774	1770	1857	1774	1770	1583
Q Serve(g_s), s	16.9	0.0	0.0	0.0	0.0	0.0	0.4	10.6	10.9	0.4	78.0	8.8
Cycle Q Clear(g_c), s	22.5	0.0	0.0	5.6	0.0	0.0	0.4	10.6	10.9	0.4	78.0	8.8
Prop In Lane	0.89		0.04	0.84		0.09	1.00		0.02	1.00		1.00
Lane Grp Cap(c), veh/h	312	0	0	343	0	0	7	1300	1364	7	2600	1163
V/C Ratio(X)	0.76	0.00	0.00	0.22	0.00	0.00	0.75	0.83	0.83	0.75	0.91	0.25
Avail Cap(c_a), veh/h	362	0	0	392	0	0	37	1300	1364	37	2600	1163
HCM Platoon Ratio	1.00	1.00	1.00	1.00	1.00	1.00	1.33	1.33	1.33	1.00	1.00	1.00
Upstream Filter(I)	1.00	0.00	0.00	1.00	0.00	0.00	0.45	0.45	0.45	0.19	0.19	0.19
Uniform Delay (d), s/veh	57.8	0.0	0.0	51.2	0.0	0.0	72.1	0.6	0.6	72.2	15.5	6.3
Incr Delay (d2), s/veh	7.8	0.0	0.0	0.3	0.0	0.0	23.5	2.9	2.8	10.8	1.3	0.1
Initial Q Delay(d3),s/veh	0.0	0.0	0.0	0.0	0.0	0.0	0.0	0.0	0.0	0.0	0.0	0.0
%ile BackOfQ(50%),veh/ln	10.0	0.0	0.0	2.7	0.0	0.0	0.2	4.2	4.8	0.2	38.0	3.9
LnGrp Delay(d),s/veh	65.6	0.0	0.0	51.6	0.0	0.0	95.6	3.4	3.4	83.0	16.7	6.4
LnGrp LOS	E			D			F	A	A	F	B	A
Approach Vol, veh/h		237			77			2216			2671	
Approach Delay, s/veh		65.6			51.6			3.6			15.7	
Approach LOS		E			D			A			B	

Timer	1	2	3	4	5	6	7	8
Assigned Phs	1	2		4	5	6		8
Phs Duration (G+Y+Rc), s	4.5	110.5		29.9	4.5	110.5		29.9
Change Period (Y+Rc), s	4.0	5.0		5.0	4.0	5.0		5.0
Max Green Setting (Gmax), s	3.0	98.0		30.0	3.0	98.0		30.0
Max Q Clear Time (g_c+I1), s	2.4	80.0		7.6	2.4	12.9		24.5
Green Ext Time (p_c), s	0.0	17.8		0.2	0.0	76.1		0.4

Intersection Summary	
HCM 2010 Ctrl Delay	13.4
HCM 2010 LOS	B

Movement	EBL	EBT	EBR	WBL	WBT	WBR	NBL	NBT	NBR	SBL	SBT	SBR
Lane Configurations												
Traffic Volume (veh/h)	190	35	45	95	25	20	55	1800	105	30	2105	160
Future Volume (veh/h)	190	35	45	95	25	20	55	1800	105	30	2105	160
Number	3	8	18	7	4	14	1	6	16	5	2	12
Initial Q (Qb), veh	0	0	0	0	0	0	0	0	0	0	0	0
Ped-Bike Adj(A_pbT)	0.98		0.97	0.98		0.97	1.00		1.00	1.00		1.00
Parking Bus, Adj	1.00	1.00	1.00	1.00	1.00	1.00	1.00	1.00	1.00	1.00	1.00	1.00
Adj Sat Flow, veh/h/ln	1863	1863	1900	1863	1863	1900	1863	1863	1900	1863	1863	1900
Adj Flow Rate, veh/h	207	38	14	103	27	2	60	1957	111	33	2288	170
Adj No. of Lanes	1	1	0	1	1	0	1	2	0	1	2	0
Peak Hour Factor	0.92	0.92	0.92	0.92	0.92	0.92	0.92	0.92	0.92	0.92	0.92	0.92
Percent Heavy Veh, %	2	2	2	2	2	2	2	2	2	2	2	2
Cap, veh/h	272	231	85	253	307	23	73	2433	137	42	2329	171
Arrive On Green	0.18	0.18	0.18	0.18	0.18	0.17	0.08	1.00	1.00	0.05	1.00	1.00
Sat Flow, veh/h	1341	1289	475	1316	1710	127	1774	3407	191	1774	3343	245
Grp Volume(v), veh/h	207	0	52	103	0	29	60	1007	1061	33	1197	1261
Grp Sat Flow(s),veh/h/ln	1341	0	1764	1316	0	1836	1774	1770	1829	1774	1770	1819
Q Serve(g_s), s	22.1	0.0	3.6	10.4	0.0	1.9	4.8	0.0	0.0	2.7	0.0	0.0
Cycle Q Clear(g_c), s	24.0	0.0	3.6	14.0	0.0	1.9	4.8	0.0	0.0	2.7	0.0	0.0
Prop In Lane	1.00		0.27	1.00		0.07	1.00		0.10	1.00		0.13
Lane Grp Cap(c), veh/h	272	0	316	253	0	329	73	1264	1306	42	1233	1267
V/C Ratio(X)	0.76	0.00	0.16	0.41	0.00	0.09	0.82	0.80	0.81	0.79	0.97	1.00
Avail Cap(c_a), veh/h	272	0	316	253	0	329	73	1264	1306	73	1233	1267
HCM Platoon Ratio	1.00	1.00	1.00	1.00	1.00	1.00	2.00	2.00	2.00	2.00	2.00	2.00
Upstream Filter(I)	1.00	0.00	1.00	1.00	0.00	1.00	0.13	0.13	0.13	0.29	0.29	0.29
Uniform Delay (d), s/veh	59.6	0.0	50.3	56.2	0.0	49.6	66.0	0.0	0.0	68.7	0.0	0.0
Incr Delay (d2), s/veh	11.7	0.0	0.2	1.1	0.0	0.1	8.8	0.7	0.8	3.5	8.6	12.5
Initial Q Delay(d3),s/veh	0.0	0.0	0.0	0.0	0.0	0.0	0.0	0.0	0.0	0.0	0.0	0.0
%ile BackOfQ(50%),veh/ln	9.1	0.0	1.8	3.9	0.0	1.0	2.5	0.3	0.3	1.4	2.9	4.4
LnGrp Delay(d),s/veh	71.3	0.0	50.6	57.3	0.0	49.8	74.8	0.7	0.8	72.2	8.6	12.5
LnGrp LOS	E		D	E		D	E	A	A	E	A	B
Approach Vol, veh/h		259			132			2128			2491	
Approach Delay, s/veh		67.2			55.6			2.9			11.4	
Approach LOS		E			E			A			B	

Timer	1	2	3	4	5	6	7	8
Assigned Phs	1	2		4	5	6		8
Phs Duration (G+Y+Rc), s	10.0	105.0		30.0	7.4	107.6		30.0
Change Period (Y+Rc), s	4.0	5.0		5.0	4.0	5.0		5.0
Max Green Setting (Gmax), s	6.0	100.0		25.0	6.0	100.0		25.0
Max Q Clear Time (g_c+I1), s	16.8	2.0		16.0	4.7	2.0		26.0
Green Ext Time (p_c), s	0.0	83.6		0.3	0.0	62.3		0.0

Intersection Summary	
HCM 2010 Ctrl Delay	11.8
HCM 2010 LOS	B

Notes

Movement	EBL	EBT	EBR	WBL	WBT	WBR	NBL	NBT	NBR	SBL	SBT	SBR
Lane Configurations												
Traffic Volume (veh/h)	65	185	60	125	110	735	55	1145	195	645	1450	65
Future Volume (veh/h)	65	185	60	125	110	735	55	1145	195	645	1450	65
Number	7	4	14	3	8	18	1	6	16	5	2	12
Initial Q (Qb), veh	0	0	0	0	0	0	0	0	0	0	0	0
Ped-Bike Adj(A_pbT)	0.98		0.98	1.00		0.98	1.00		0.99	1.00		0.99
Parking Bus, Adj	1.00	1.00	1.00	1.00	1.00	1.00	1.00	1.00	1.00	1.00	1.00	1.00
Adj Sat Flow, veh/h/ln	1900	1863	1863	1863	1863	1863	1863	1863	1863	1863	1863	1900
Adj Flow Rate, veh/h	71	201	8	136	120	535	60	1245	137	701	1576	69
Adj No. of Lanes	0	1	1	1	1	1	1	2	1	2	2	0
Peak Hour Factor	0.92	0.92	0.92	0.92	0.92	0.92	0.92	0.92	0.92	0.92	0.92	0.92
Percent Heavy Veh, %	2	2	2	2	2	2	2	2	2	2	2	2
Cap, veh/h	117	277	337	360	604	505	77	1367	607	712	1899	83
Arrive On Green	0.22	0.22	0.22	0.08	0.32	0.32	0.04	0.39	0.39	0.41	1.00	1.00
Sat Flow, veh/h	393	1272	1544	1774	1863	1557	1774	3539	1571	3442	3454	151
Grp Volume(v), veh/h	272	0	8	136	120	535	60	1245	137	701	805	840
Grp Sat Flow(s),veh/h/ln	1665	0	1544	1774	1863	1557	1774	1770	1571	1721	1770	1835
Q Serve(g_s), s	19.3	0.0	0.6	8.3	6.7	47.0	4.9	48.3	8.5	29.2	0.0	0.0
Cycle Q Clear(g_c), s	22.0	0.0	0.6	8.3	6.7	47.0	4.9	48.3	8.5	29.2	0.0	0.0
Prop In Lane	0.26		1.00	1.00		1.00	1.00		1.00	1.00		0.08
Lane Grp Cap(c), veh/h	394	0	337	360	604	505	77	1367	607	712	973	1009
V/C Ratio(X)	0.69	0.00	0.02	0.38	0.20	1.06	0.78	0.91	0.23	0.98	0.83	0.83
Avail Cap(c_a), veh/h	394	0	337	404	604	505	122	1367	607	712	973	1009
HCM Platoon Ratio	1.00	1.00	1.00	1.00	1.00	1.00	1.00	1.00	1.00	2.00	2.00	2.00
Upstream Filter(I)	1.00	0.00	1.00	1.00	1.00	1.00	0.88	0.88	0.88	0.13	0.13	0.13
Uniform Delay (d), s/veh	52.8	0.0	44.6	37.3	35.4	49.0	68.7	42.1	29.9	42.3	0.0	0.0
Incr Delay (d2), s/veh	5.0	0.0	0.0	0.7	0.2	56.9	5.7	9.6	0.8	9.1	1.2	1.2
Initial Q Delay(d3),s/veh	0.0	0.0	0.0	0.0	0.0	0.0	0.0	0.0	0.0	0.0	0.0	0.0
%ile BackOfQ(50%),veh/ln	10.8	0.0	0.3	4.1	3.5	28.2	2.5	25.3	3.8	14.6	0.3	0.3
LnGrp Delay(d),s/veh	57.8	0.0	44.6	38.0	35.6	105.9	74.4	51.7	30.7	51.4	1.2	1.2
LnGrp LOS	E		D	D	D	F	E	D	C	D	A	A
Approach Vol, veh/h		280			791			1442			2346	
Approach Delay, s/veh		57.5			83.6			50.7			16.2	
Approach LOS		E			F			D			B	

Timer	1	2	3	4	5	6	7	8
Assigned Phs	1	2	3	4	5	6		8
Phs Duration (G+Y+Rc), s	10.3	83.7	15.4	35.6	34.0	60.0		51.0
Change Period (Y+Rc), s	4.0	5.0	5.0	5.0	4.0	5.0		5.0
Max Green Setting (Gmax), s	10.0	75.0	14.0	27.0	30.0	55.0		46.0
Max Q Clear Time (g_c+I1), s	6.9	2.0	10.3	24.0	31.2	50.3		49.0
Green Ext Time (p_c), s	0.0	34.5	0.1	0.3	0.0	3.8		0.0

Intersection Summary	
HCM 2010 Ctrl Delay	39.8
HCM 2010 LOS	D

Notes

Intersection	
Int Delay, s/veh	0.5

Movement	WBL	WBR	NBT	NBR	SBL	SBT
Lane Configurations		↱	↑	↱		↑
Traffic Vol, veh/h	0	50	1005	65	0	1000
Future Vol, veh/h	0	50	1005	65	0	1000
Conflicting Peds, #/hr	0	0	0	0	0	0
Sign Control	Stop	Stop	Free	Free	Free	Free
RT Channelized	-	None	-	None	-	None
Storage Length	-	0	-	0	-	-
Veh in Median Storage, #	0	-	0	-	-	0
Grade, %	0	-	0	-	-	0
Peak Hour Factor	92	92	92	92	92	92
Heavy Vehicles, %	2	2	2	2	2	2
Mvmt Flow	0	54	1092	71	0	1087

Major/Minor	Minor1		Major1		Major2	
Conflicting Flow All	-	1092	0	0	-	-
Stage 1	-	-	-	-	-	-
Stage 2	-	-	-	-	-	-
Critical Hdwy	-	6.22	-	-	-	-
Critical Hdwy Stg 1	-	-	-	-	-	-
Critical Hdwy Stg 2	-	-	-	-	-	-
Follow-up Hdwy	-	3.318	-	-	-	-
Pot Cap-1 Maneuver	0	261	-	-	0	-
Stage 1	0	-	-	-	0	-
Stage 2	0	-	-	-	0	-
Platoon blocked, %			-	-		-
Mov Cap-1 Maneuver	-	261	-	-	-	-
Mov Cap-2 Maneuver	-	-	-	-	-	-
Stage 1	-	-	-	-	-	-
Stage 2	-	-	-	-	-	-

Approach	WB	NB	SB
HCM Control Delay, s	22.4	0	0
HCM LOS	C		

Minor Lane/Major Mvmt	NBT	NBR	WBLn1	SBT
Capacity (veh/h)	-	-	261	-
HCM Lane V/C Ratio	-	-	0.208	-
HCM Control Delay (s)	-	-	22.4	-
HCM Lane LOS	-	-	C	-
HCM 95th %tile Q(veh)	-	-	0.8	-

Intersection	
Int Delay, s/veh	2

Movement	WBL	WBR	NBT	NBR	SBL	SBT
Lane Configurations						
Traffic Vol, veh/h	55	30	1165	80	45	1075
Future Vol, veh/h	55	30	1165	80	45	1075
Conflicting Peds, #/hr	0	0	0	0	0	0
Sign Control	Stop	Stop	Free	Free	Free	Free
RT Channelized	-	None	-	None	-	None
Storage Length	0	100	-	100	100	-
Veh in Median Storage, #	0	-	0	-	-	0
Grade, %	0	-	0	-	-	0
Peak Hour Factor	92	92	92	92	92	92
Heavy Vehicles, %	2	2	2	2	2	2
Mvmt Flow	60	33	1266	87	49	1168

Major/Minor	Minor1		Major1		Major2	
Conflicting Flow All	2532	1266	0	0	1353	0
Stage 1	1266	-	-	-	-	-
Stage 2	1266	-	-	-	-	-
Critical Hdwy	6.42	6.22	-	-	4.12	-
Critical Hdwy Stg 1	5.42	-	-	-	-	-
Critical Hdwy Stg 2	5.42	-	-	-	-	-
Follow-up Hdwy	3.518	3.318	-	-	2.218	-
Pot Cap-1 Maneuver	~ 30	206	-	-	509	-
Stage 1	265	-	-	-	-	-
Stage 2	265	-	-	-	-	-
Platoon blocked, %			-	-		-
Mov Cap-1 Maneuver	~ 27	206	-	-	509	-
Mov Cap-2 Maneuver	116	-	-	-	-	-
Stage 1	240	-	-	-	-	-
Stage 2	265	-	-	-	-	-

Approach	WB	NB	SB
HCM Control Delay, s	51.3	0	0.5
HCM LOS	F		

Minor Lane/Major Mvmt	NBT	NBR	WBLn1	WBLn2	SBL	SBT
Capacity (veh/h)	-	-	116	206	509	-
HCM Lane V/C Ratio	-	-	0.515	0.158	0.096	-
HCM Control Delay (s)	-	-	65.2	25.7	12.8	-
HCM Lane LOS	-	-	F	D	B	-
HCM 95th %tile Q(veh)	-	-	2.4	0.6	0.3	-

Notes

~: Volume exceeds capacity $: Delay exceeds 300s +: Computation Not Defined *: All major volume in platoon

Intersection	
Int Delay, s/veh	7.8

Movement	EBL	EBT	EBR	WBL	WBT	WBR	NBL	NBT	NBR	SBL	SBT	SBR
Lane Configurations												
Traffic Vol, veh/h	120	85	130	5	65	10	115	10	15	30	10	100
Future Vol, veh/h	120	85	130	5	65	10	115	10	15	30	10	100
Conflicting Peds, #/hr	0	0	0	0	0	0	0	0	0	0	0	0
Sign Control	Free	Free	Free	Free	Free	Free	Stop	Stop	Stop	Stop	Stop	Stop
RT Channelized	-	-	None	-	-	None	-	-	None	-	-	None
Storage Length	100	-	-	100	-	-	-	-	-	-	-	-
Veh in Median Storage, #	-	0	-	-	0	-	-	0	-	-	0	-
Grade, %	-	0	-	-	0	-	-	0	-	-	0	-
Peak Hour Factor	92	92	92	92	92	92	92	92	92	92	92	92
Heavy Vehicles, %	2	2	2	2	2	2	2	2	2	2	2	2
Mvmt Flow	130	92	141	5	71	11	125	11	16	33	11	109

Major/Minor	Major1			Major2			Minor1			Minor2		
Conflicting Flow All	82	0	0	233	0	0	570	515	163	523	580	77
Stage 1	-	-	-	-	-	-	423	423	-	87	87	-
Stage 2	-	-	-	-	-	-	147	92	-	436	493	-
Critical Hdwy	4.12	-	-	4.12	-	-	7.12	6.52	6.22	7.12	6.52	6.22
Critical Hdwy Stg 1	-	-	-	-	-	-	6.12	5.52	-	6.12	5.52	-
Critical Hdwy Stg 2	-	-	-	-	-	-	6.12	5.52	-	6.12	5.52	-
Follow-up Hdwy	2.218	-	-	2.218	-	-	3.518	4.018	3.318	3.518	4.018	3.318
Pot Cap-1 Maneuver	1515	-	-	1335	-	-	432	464	882	465	426	984
Stage 1	-	-	-	-	-	-	609	588	-	921	823	-
Stage 2	-	-	-	-	-	-	856	819	-	599	547	-
Platoon blocked, %		-	-		-	-						
Mov Cap-1 Maneuver	1515	-	-	1335	-	-	350	422	882	417	388	984
Mov Cap-2 Maneuver	-	-	-	-	-	-	350	422	-	417	388	-
Stage 1	-	-	-	-	-	-	557	537	-	842	820	-
Stage 2	-	-	-	-	-	-	749	816	-	527	500	-

Approach	EB	WB	NB	SB
HCM Control Delay, s	2.7	0.5	20.7	11.5
HCM LOS			C	B

Minor Lane/Major Mvmt	NBLn1	EBL	EBT	EBR	WBL	WBT	WBR	SBLn1
Capacity (veh/h)	379	1515	-	-	1335	-	-	702
HCM Lane V/C Ratio	0.402	0.086	-	-	0.004	-	-	0.217
HCM Control Delay (s)	20.7	7.6	-	-	7.7	-	-	11.5
HCM Lane LOS	C	A	-	-	A	-	-	B
HCM 95th %tile Q(veh)	1.9	0.3	-	-	0	-	-	0.8

Intersection	
Int Delay, s/veh	4.2

Movement	EBL	EBT	EBR	WBL	WBT	WBR	NBL	NBT	NBR	SBL	SBT	SBR
Lane Configurations												
Traffic Vol, veh/h	30	15	90	5	20	5	45	5	5	5	5	15
Future Vol, veh/h	30	15	90	5	20	5	45	5	5	5	5	15
Conflicting Peds, #/hr	0	0	0	0	0	0	0	0	0	0	0	0
Sign Control	Free	Free	Free	Free	Free	Free	Stop	Stop	Stop	Stop	Stop	Stop
RT Channelized	-	-	None	-	-	None	-	-	None	-	-	None
Storage Length	-	-	-	-	-	-	-	-	-	-	-	-
Veh in Median Storage, #	-	0	-	-	0	-	-	0	-	-	0	-
Grade, %	-	0	-	-	0	-	-	0	-	-	0	-
Peak Hour Factor	92	92	92	92	92	92	92	92	92	92	92	92
Heavy Vehicles, %	2	2	2	2	2	2	2	2	2	2	2	2
Mvmt Flow	33	16	98	5	22	5	49	5	5	5	5	16

Major/Minor	Major1			Major2			Minor1			Minor2		
Conflicting Flow All	27	0	0	114	0	0	176	168	65	171	215	25
Stage 1	-	-	-	-	-	-	131	131	-	35	35	-
Stage 2	-	-	-	-	-	-	45	37	-	136	180	-
Critical Hdwy	4.12	-	-	4.12	-	-	7.12	6.52	6.22	7.12	6.52	6.22
Critical Hdwy Stg 1	-	-	-	-	-	-	6.12	5.52	-	6.12	5.52	-
Critical Hdwy Stg 2	-	-	-	-	-	-	6.12	5.52	-	6.12	5.52	-
Follow-up Hdwy	2.218	-	-	2.218	-	-	3.518	4.018	3.318	3.518	4.018	3.318
Pot Cap-1 Maneuver	1587	-	-	1475	-	-	786	725	999	792	683	1051
Stage 1	-	-	-	-	-	-	873	788	-	981	866	-
Stage 2	-	-	-	-	-	-	969	864	-	867	750	-
Platoon blocked, %		-	-		-	-						
Mov Cap-1 Maneuver	1587	-	-	1475	-	-	755	707	999	768	666	1051
Mov Cap-2 Maneuver	-	-	-	-	-	-	755	707	-	768	666	-
Stage 1	-	-	-	-	-	-	854	771	-	959	863	-
Stage 2	-	-	-	-	-	-	945	861	-	837	734	-

Approach	EB	WB	NB	SB
HCM Control Delay, s	1.6	1.2	10.1	9.2
HCM LOS			B	A

Minor Lane/Major Mvmt	NBLn1	EBL	EBT	EBR	WBL	WBT	WBR	SBLn1
Capacity (veh/h)	767	1587	-	-	1475	-	-	884
HCM Lane V/C Ratio	0.078	0.021	-	-	0.004	-	-	0.031
HCM Control Delay (s)	10.1	7.3	0	-	7.5	0	-	9.2
HCM Lane LOS	B	A	A	-	A	A	-	A
HCM 95th %tile Q(veh)	0.3	0.1	-	-	0	-	-	0.1

Intersection	
Int Delay, s/veh	1.9

Movement	EBT	EBR	WBL	WBT	NBL	NBR
Lane Configurations						
Traffic Vol, veh/h	85	40	5	45	35	5
Future Vol, veh/h	85	40	5	45	35	5
Conflicting Peds, #/hr	0	0	0	0	0	0
Sign Control	Free	Free	Free	Free	Stop	Stop
RT Channelized	-	None	-	None	-	None
Storage Length	-	-	-	-	0	-
Veh in Median Storage, #	0	-	-	0	0	-
Grade, %	0	-	-	0	0	-
Peak Hour Factor	92	92	92	92	92	92
Heavy Vehicles, %	2	2	2	2	2	2
Mvmt Flow	92	43	5	49	38	5

Major/Minor	Major1		Major2		Minor1	
Conflicting Flow All	0	0	135	0	173	114
Stage 1	-	-	-	-	114	-
Stage 2	-	-	-	-	59	-
Critical Hdwy	-	-	4.12	-	6.42	6.22
Critical Hdwy Stg 1	-	-	-	-	5.42	-
Critical Hdwy Stg 2	-	-	-	-	5.42	-
Follow-up Hdwy	-	-	2.218	-	3.518	3.318
Pot Cap-1 Maneuver	-	-	1449	-	817	939
Stage 1	-	-	-	-	911	-
Stage 2	-	-	-	-	964	-
Platoon blocked, %	-	-		-		
Mov Cap-1 Maneuver	-	-	1449	-	814	939
Mov Cap-2 Maneuver	-	-	-	-	814	-
Stage 1	-	-	-	-	907	-
Stage 2	-	-	-	-	964	-

Approach	EB	WB	NB
HCM Control Delay, s	0	0.7	9.6
HCM LOS			A

Minor Lane/Major Mvmt	NBLn1	EBT	EBR	WBL	WBT
Capacity (veh/h)	828	-	-	1449	-
HCM Lane V/C Ratio	0.053	-	-	0.004	-
HCM Control Delay (s)	9.6	-	-	7.5	0
HCM Lane LOS	A	-	-	A	A
HCM 95th %tile Q(veh)	0.2	-	-	0	-

Intersection	
Intersection Delay, s/veh	3.9
Intersection LOS	A

Approach	EB	WB	NB
Entry Lanes	1	1	1
Conflicting Circle Lanes	1	1	1
Adj Approach Flow, veh/h	97	32	27
Demand Flow Rate, veh/h	99	33	27
Vehicles Circulating, veh/h	5	22	55
Vehicles Exiting, veh/h	50	60	49
Follow-Up Headway, s	3.186	3.186	3.186
Ped Vol Crossing Leg, #/h	0	0	0
Ped Cap Adj	1.000	1.000	1.000
Approach Delay, s/veh	4.0	3.6	3.6
Approach LOS	A	A	A

Lane	Left	Left	Left
Designated Moves	TR	LT	LR
Assumed Moves	TR	LT	LR
RT Channelized			
Lane Util	1.000	1.000	1.000
Critical Headway, s	5.193	5.193	5.193
Entry Flow, veh/h	99	33	27
Cap Entry Lane, veh/h	1124	1105	1069
Entry HV Adj Factor	0.979	0.983	1.000
Flow Entry, veh/h	97	32	27
Cap Entry, veh/h	1101	1087	1069
V/C Ratio	0.088	0.030	0.025
Control Delay, s/veh	4.0	3.6	3.6
LOS	A	A	A
95th %tile Queue, veh	0	0	0

APPENDIX C

LEVEL OF SERVICE CALCULATIONS

- Future Year 2027 Scenario 4 WE Peak

Movement	EBL	EBT	EBR	WBL	WBT	WBR	NBL	NBT	NBR	SBL	SBT	SBR
Lane Configurations												
Traffic Volume (veh/h)	40	45	385	50	50	20	325	435	45	20	400	90
Future Volume (veh/h)	40	45	385	50	50	20	325	435	45	20	400	90
Number	7	4	14	3	8	18	5	2	12	1	6	16
Initial Q (Qb), veh	0	0	0	0	0	0	0	0	0	0	0	0
Ped-Bike Adj(A_pbT)	0.99		0.99	0.99		0.99	1.00		1.00	1.00		1.00
Parking Bus, Adj	1.00	1.00	1.00	1.00	1.00	1.00	1.00	1.00	1.00	1.00	1.00	1.00
Adj Sat Flow, veh/h/ln	1900	1863	1863	1863	1863	1900	1863	1863	1863	1863	1863	1863
Adj Flow Rate, veh/h	43	49	31	54	54	10	353	473	29	22	435	33
Adj No. of Lanes	0	1	1	1	1	0	1	1	1	1	1	1
Peak Hour Factor	0.92	0.92	0.92	0.92	0.92	0.92	0.92	0.92	0.92	0.92	0.92	0.92
Percent Heavy Veh, %	2	2	2	2	2	2	2	2	2	2	2	2
Cap, veh/h	160	127	192	218	187	35	427	1074	911	28	654	555
Arrive On Green	0.12	0.12	0.12	0.12	0.12	0.12	0.24	0.58	0.58	0.02	0.35	0.35
Sat Flow, veh/h	539	1033	1564	1302	1526	283	1774	1863	1581	1774	1863	1581
Grp Volume(v), veh/h	92	0	31	54	0	64	353	473	29	22	435	33
Grp Sat Flow(s),veh/h/ln	1572	0	1564	1302	0	1809	1774	1863	1581	1774	1863	1581
Q Serve(g_s), s	1.2	0.0	1.0	2.3	0.0	1.8	10.6	8.1	0.4	0.7	11.1	0.8
Cycle Q Clear(g_c), s	3.0	0.0	1.0	5.3	0.0	1.8	10.6	8.1	0.4	0.7	11.1	0.8
Prop In Lane	0.47		1.00	1.00		0.16	1.00		1.00	1.00		1.00
Lane Grp Cap(c), veh/h	287	0	192	218	0	222	427	1074	911	28	654	555
V/C Ratio(X)	0.32	0.00	0.16	0.25	0.00	0.29	0.83	0.44	0.03	0.80	0.66	0.06
Avail Cap(c_a), veh/h	764	0	670	615	0	774	949	2625	2227	475	2127	1805
HCM Platoon Ratio	1.00	1.00	1.00	1.00	1.00	1.00	1.00	1.00	1.00	1.00	1.00	1.00
Upstream Filter(I)	1.00	0.00	1.00	1.00	0.00	1.00	1.00	1.00	1.00	1.00	1.00	1.00
Uniform Delay (d), s/veh	22.8	0.0	22.0	25.4	0.0	22.4	20.2	6.7	5.1	27.5	15.4	12.0
Incr Delay (d2), s/veh	0.6	0.0	0.4	0.6	0.0	0.7	4.1	0.6	0.0	39.1	2.5	0.1
Initial Q Delay(d3),s/veh	0.0	0.0	0.0	0.0	0.0	0.0	0.0	0.0	0.0	0.0	0.0	0.0
%ile BackOfQ(50%),veh/ln	1.4	0.0	0.4	0.8	0.0	0.9	5.6	4.3	0.2	0.6	6.1	0.4
LnGrp Delay(d),s/veh	23.5	0.0	22.4	26.0	0.0	23.1	24.3	7.3	5.2	66.7	17.9	12.1
LnGrp LOS	C		C	C		C	C	A	A	E	B	B
Approach Vol, veh/h		123			118			855			490	
Approach Delay, s/veh		23.2			24.4			14.3			19.7	
Approach LOS		C			C			B			B	

Timer	1	2	3	4	5	6	7	8
Assigned Phs	1	2		4	5	6		8
Phs Duration (G+Y+Rc), s	5.9	38.3		11.9	18.5	25.7		11.9
Change Period (Y+Rc), s	5.0	6.0		5.0	5.0	6.0		5.0
Max Green Setting (Gmax), s	15.0	79.0		24.0	30.0	64.0		24.0
Max Q Clear Time (g_c+I1), s	2.7	10.1		5.0	12.6	13.1		7.3
Green Ext Time (p_c), s	0.0	7.4		0.5	1.0	6.5		0.4

Intersection Summary	
HCM 2010 Ctrl Delay	17.4
HCM 2010 LOS	B

Movement	EBL	EBT	EBR	WBL	WBT	WBR	NBL	NBT	NBR	SBL	SBT	SBR
Lane Configurations												
Traffic Volume (veh/h)	55	20	245	50	15	5	170	630	35	15	670	60
Future Volume (veh/h)	55	20	245	50	15	5	170	630	35	15	670	60
Number	7	4	14	3	8	18	5	2	12	1	6	16
Initial Q (Qb), veh	0	0	0	0	0	0	0	0	0	0	0	0
Ped-Bike Adj(A_pbT)	0.98		0.98	0.99		0.98	1.00		1.00	1.00		1.00
Parking Bus, Adj	1.00	1.00	1.00	1.00	1.00	1.00	1.00	1.00	1.00	1.00	1.00	1.00
Adj Sat Flow, veh/h/ln	1900	1863	1863	1863	1863	1900	1863	1863	1863	1863	1863	1863
Adj Flow Rate, veh/h	60	22	19	54	16	1	185	685	0	16	728	29
Adj No. of Lanes	0	1	1	1	1	0	1	1	1	1	1	1
Peak Hour Factor	0.92	0.92	0.92	0.92	0.92	0.92	0.92	0.92	0.92	0.92	0.92	0.92
Percent Heavy Veh, %	2	2	2	2	2	2	2	2	2	2	2	2
Cap, veh/h	252	75	219	259	244	15	386	1028	874	373	890	754
Arrive On Green	0.14	0.14	0.14	0.14	0.14	0.14	0.09	0.55	0.00	0.01	0.48	0.48
Sat Flow, veh/h	974	535	1555	1341	1733	108	1774	1863	1583	1774	1863	1578
Grp Volume(v), veh/h	82	0	19	54	0	17	185	685	0	16	728	29
Grp Sat Flow(s),veh/h/ln	1509	0	1555	1341	0	1841	1774	1863	1583	1774	1863	1578
Q Serve(g_s), s	1.8	0.0	0.6	2.1	0.0	0.4	2.6	14.1	0.0	0.3	18.2	0.5
Cycle Q Clear(g_c), s	2.5	0.0	0.6	4.6	0.0	0.4	2.6	14.1	0.0	0.3	18.2	0.5
Prop In Lane	0.73		1.00	1.00		0.06	1.00		1.00	1.00		1.00
Lane Grp Cap(c), veh/h	328	0	219	259	0	260	386	1028	874	373	890	754
V/C Ratio(X)	0.25	0.00	0.09	0.21	0.00	0.07	0.48	0.67	0.00	0.04	0.82	0.04
Avail Cap(c_a), veh/h	799	0	717	688	0	849	724	1752	1489	843	1752	1484
HCM Platoon Ratio	1.00	1.00	1.00	1.00	1.00	1.00	1.00	1.00	1.00	1.00	1.00	1.00
Upstream Filter(I)	1.00	0.00	1.00	1.00	0.00	1.00	1.00	1.00	0.00	1.00	1.00	1.00
Uniform Delay (d), s/veh	21.0	0.0	20.3	23.2	0.0	20.2	9.9	8.6	0.0	8.1	12.1	7.5
Incr Delay (d2), s/veh	0.4	0.0	0.2	0.4	0.0	0.1	0.9	0.8	0.0	0.0	1.9	0.0
Initial Q Delay(d3),s/veh	0.0	0.0	0.0	0.0	0.0	0.0	0.0	0.0	0.0	0.0	0.0	0.0
%ile BackOfQ(50%),veh/ln	1.2	0.0	0.3	0.8	0.0	0.2	1.4	7.3	0.0	0.1	9.6	0.2
LnGrp Delay(d),s/veh	21.4	0.0	20.4	23.6	0.0	20.3	10.8	9.4	0.0	8.1	14.1	7.6
LnGrp LOS	C		C	C		C	B	A		A	B	A
Approach Vol, veh/h		101			71			870			773	
Approach Delay, s/veh		21.2			22.8			9.7			13.7	
Approach LOS		C			C			A			B	

Timer	1	2	3	4	5	6	7	8
Assigned Phs	1	2		4	5	6		8
Phs Duration (G+Y+Rc), s	5.6	35.9		12.6	9.7	31.9		12.6
Change Period (Y+Rc), s	5.0	6.0		5.0	5.0	6.0		5.0
Max Green Setting (Gmax), s	15.0	51.0		25.0	15.0	51.0		25.0
Max Q Clear Time (g_c+I1), s	2.3	16.1		4.5	4.6	20.2		6.6
Green Ext Time (p_c), s	0.0	5.2		0.4	0.3	5.7		0.2

Intersection Summary	
HCM 2010 Ctrl Delay	12.5
HCM 2010 LOS	B

Movement	EBL	EBT	EBR	WBL	WBT	WBR	NBL	NBT	NBR	SBL	SBT	SBR
Lane Configurations												
Traffic Volume (veh/h)	45	75	85	215	80	95	85	710	185	165	760	50
Future Volume (veh/h)	45	75	85	215	80	95	85	710	185	165	760	50
Number	7	4	14	3	8	18	5	2	12	1	6	16
Initial Q (Qb), veh	0	0	0	0	0	0	0	0	0	0	0	0
Ped-Bike Adj(A_pbT)	1.00		0.99	1.00		1.00	1.00		1.00	1.00		1.00
Parking Bus, Adj	1.00	1.00	1.00	1.00	1.00	1.00	1.00	1.00	1.00	1.00	1.00	1.00
Adj Sat Flow, veh/h/ln	1863	1863	1900	1863	1863	1863	1863	1863	1863	1863	1863	1863
Adj Flow Rate, veh/h	49	82	63	234	87	15	92	772	143	179	826	25
Adj No. of Lanes	1	1	0	1	1	1	1	1	1	1	1	1
Peak Hour Factor	0.92	0.92	0.92	0.92	0.92	0.92	0.92	0.92	0.92	0.92	0.92	0.92
Percent Heavy Veh, %	2	2	2	2	2	2	2	2	2	2	2	2
Cap, veh/h	64	104	80	263	408	347	118	845	718	211	943	800
Arrive On Green	0.04	0.11	0.11	0.15	0.22	0.22	0.07	0.45	0.45	0.12	0.51	0.51
Sat Flow, veh/h	1774	972	747	1774	1863	1583	1774	1863	1583	1774	1863	1582
Grp Volume(v), veh/h	49	0	145	234	87	15	92	772	143	179	826	25
Grp Sat Flow(s),veh/h/ln	1774	0	1718	1774	1863	1583	1774	1863	1583	1774	1863	1582
Q Serve(g_s), s	3.2	0.0	9.5	15.0	4.4	0.9	5.9	44.8	6.3	11.4	45.5	0.9
Cycle Q Clear(g_c), s	3.2	0.0	9.5	15.0	4.4	0.9	5.9	44.8	6.3	11.4	45.5	0.9
Prop In Lane	1.00		0.43	1.00		1.00	1.00		1.00	1.00		1.00
Lane Grp Cap(c), veh/h	64	0	183	263	408	347	118	845	718	211	943	800
V/C Ratio(X)	0.77	0.00	0.79	0.89	0.21	0.04	0.78	0.91	0.20	0.85	0.88	0.03
Avail Cap(c_a), veh/h	307	0	312	307	408	347	383	1047	890	383	1047	889
HCM Platoon Ratio	1.00	1.00	1.00	1.00	1.00	1.00	1.00	1.00	1.00	1.00	1.00	1.00
Upstream Filter(I)	1.00	0.00	1.00	1.00	1.00	1.00	1.00	1.00	1.00	1.00	1.00	1.00
Uniform Delay (d), s/veh	55.3	0.0	50.4	48.3	37.0	35.6	53.2	29.5	19.0	50.0	25.4	14.3
Incr Delay (d2), s/veh	17.5	0.0	7.5	23.5	0.3	0.1	10.7	10.5	0.1	9.2	7.9	0.0
Initial Q Delay(d3),s/veh	0.0	0.0	0.0	0.0	0.0	0.0	0.0	0.0	0.0	0.0	0.0	0.0
%ile BackOfQ(50%),veh/ln	1.9	0.0	4.9	9.1	2.3	0.4	3.2	25.4	2.8	6.2	25.3	0.4
LnGrp Delay(d),s/veh	72.8	0.0	57.9	71.8	37.3	35.7	63.9	40.0	19.1	59.1	33.3	14.4
LnGrp LOS	E		E	E	D	D	E	D	B	E	C	B
Approach Vol, veh/h		194			336			1007			1030	
Approach Delay, s/veh		61.7			61.2			39.2			37.3	
Approach LOS		E			E			D			D	

Timer	1	2	3	4	5	6	7	8
Assigned Phs	1	2	3	4	5	6	7	8
Phs Duration (G+Y+Rc), s	18.7	57.5	22.2	17.3	12.7	63.5	9.2	30.3
Change Period (Y+Rc), s	5.0	5.0	5.0	5.0	5.0	5.0	5.0	5.0
Max Green Setting (Gmax), s	25.0	65.0	20.0	21.0	25.0	65.0	20.0	21.0
Max Q Clear Time (g_c+I1), s	13.4	46.8	17.0	11.5	7.9	47.5	5.2	6.4
Green Ext Time (p_c), s	0.3	5.7	0.2	0.5	0.2	5.7	0.1	0.3

Intersection Summary	
HCM 2010 Ctrl Delay	43.0
HCM 2010 LOS	D

Movement	EBL	EBT	EBR	WBL	WBT	WBR	NBL	NBT	NBR	SBL	SBT	SBR
Lane Configurations												
Traffic Volume (veh/h)	80	10	595	10	0	5	410	930	5	0	1035	70
Future Volume (veh/h)	80	10	595	10	0	5	410	930	5	0	1035	70
Number	3	8	18	7	4	14	1	6	16	5	2	12
Initial Q (Qb), veh	0	0	0	0	0	0	0	0	0	0	0	0
Ped-Bike Adj(A_pbT)	1.00		1.00	1.00		1.00	1.00		1.00	1.00		1.00
Parking Bus, Adj	1.00	1.00	1.00	1.00	1.00	1.00	1.00	1.00	1.00	1.00	1.00	1.00
Adj Sat Flow, veh/h/ln	1900	1863	1863	1900	1863	1900	1863	1863	1900	1863	1863	1863
Adj Flow Rate, veh/h	87	11	0	11	0	1	446	1011	5	0	1125	40
Adj No. of Lanes	0	1	1	0	1	0	1	2	0	1	2	1
Peak Hour Factor	0.92	0.92	0.92	0.92	0.92	0.92	0.92	0.92	0.92	0.92	0.92	0.92
Percent Heavy Veh, %	2	2	2	2	2	2	2	2	2	2	2	2
Cap, veh/h	192	14	134	206	3	12	495	2828	14	2	1614	720
Arrive On Green	0.10	0.08	0.00	0.10	0.00	0.08	0.28	0.78	0.78	0.00	0.46	0.46
Sat Flow, veh/h	1303	165	1583	1457	38	136	1774	3611	18	1774	3539	1578
Grp Volume(v), veh/h	98	0	0	12	0	0	446	495	521	0	1125	40
Grp Sat Flow(s),veh/h/ln	1467	0	1583	1631	0	0	1774	1770	1860	1774	1770	1578
Q Serve(g_s), s	4.8	0.0	0.0	0.0	0.0	0.0	20.1	7.0	7.0	0.0	21.1	1.2
Cycle Q Clear(g_c), s	5.3	0.0	0.0	0.5	0.0	0.0	20.1	7.0	7.0	0.0	21.1	1.2
Prop In Lane	0.89		1.00	0.92		0.08	1.00		0.01	1.00		1.00
Lane Grp Cap(c), veh/h	224	0	134	241	0	0	495	1386	1456	2	1614	720
V/C Ratio(X)	0.44	0.00	0.00	0.05	0.00	0.00	0.90	0.36	0.36	0.00	0.70	0.06
Avail Cap(c_a), veh/h	623	0	572	580	0	0	1516	1386	1456	1516	2428	1083
HCM Platoon Ratio	1.00	1.00	1.00	1.00	1.00	1.00	1.00	1.00	1.00	1.00	1.00	1.00
Upstream Filter(I)	1.00	0.00	0.00	1.00	0.00	0.00	1.00	1.00	1.00	0.00	1.00	1.00
Uniform Delay (d), s/veh	36.8	0.0	0.0	34.6	0.0	0.0	28.9	2.7	2.7	0.0	18.0	12.6
Incr Delay (d2), s/veh	1.3	0.0	0.0	0.1	0.0	0.0	2.5	0.3	0.3	0.0	1.2	0.1
Initial Q Delay(d3),s/veh	0.0	0.0	0.0	0.0	0.0	0.0	0.0	0.0	0.0	0.0	0.0	0.0
%ile BackOfQ(50%),veh/ln	2.2	0.0	0.0	0.3	0.0	0.0	10.1	3.4	3.6	0.0	10.4	0.5
LnGrp Delay(d),s/veh	38.1	0.0	0.0	34.7	0.0	0.0	31.4	3.1	3.0	0.0	19.2	12.7
LnGrp LOS	D			C			C	A	A		B	B
Approach Vol, veh/h		98			12			1462			1165	
Approach Delay, s/veh		38.1			34.7			11.7			19.0	
Approach LOS		D			C			B			B	

Timer	1	2	3	4	5	6	7	8
Assigned Phs	1	2		4	5	6		8
Phs Duration (G+Y+Rc), s	27.2	43.9		12.0	0.0	71.1		12.0
Change Period (Y+Rc), s	4.0	6.0		5.0	4.0	6.0		5.0
Max Green Setting (Gmax), s	71.0	57.0		27.0	71.0	57.0		30.0
Max Q Clear Time (g_c+I1), s	22.1	23.1		2.5	0.0	9.0		7.3
Green Ext Time (p_c), s	1.0	14.8		0.0	0.0	12.7		0.3

Intersection Summary	
HCM 2010 Ctrl Delay	15.8
HCM 2010 LOS	B

Movement	EBL	EBT	EBR	WBL	WBT	WBR	NBL	NBT	NBR	SBL	SBT	SBR
Lane Configurations												
Traffic Volume (veh/h)	65	5	145	15	5	15	105	1275	20	10	1600	70
Future Volume (veh/h)	65	5	145	15	5	15	105	1275	20	10	1600	70
Number	3	8	18	7	4	14	1	6	16	5	2	12
Initial Q (Qb), veh	0	0	0	0	0	0	0	0	0	0	0	0
Ped-Bike Adj(A_pbT)	0.98		0.98	0.98		0.98	1.00		1.00	1.00		1.00
Parking Bus, Adj	1.00	1.00	1.00	1.00	1.00	1.00	1.00	1.00	1.00	1.00	1.00	1.00
Adj Sat Flow, veh/h/ln	1900	1863	1863	1900	1863	1900	1863	1863	1900	1863	1863	1863
Adj Flow Rate, veh/h	71	5	5	16	5	1	114	1386	22	11	1739	48
Adj No. of Lanes	0	1	1	0	1	0	1	2	0	1	2	1
Peak Hour Factor	0.92	0.92	0.92	0.92	0.92	0.92	0.92	0.92	0.92	0.92	0.92	0.92
Percent Heavy Veh, %	2	2	2	2	2	2	2	2	2	2	2	2
Cap, veh/h	207	12	141	128	31	4	144	2661	42	14	2383	1064
Arrive On Green	0.10	0.09	0.09	0.10	0.09	0.09	0.08	0.75	0.75	0.01	0.67	0.67
Sat Flow, veh/h	1429	129	1547	646	344	47	1774	3566	57	1774	3539	1580
Grp Volume(v), veh/h	76	0	5	22	0	0	114	687	721	11	1739	48
Grp Sat Flow(s),veh/h/ln	1558	0	1547	1037	0	0	1774	1770	1853	1774	1770	1580
Q Serve(g_s), s	0.0	0.0	0.3	0.3	0.0	0.0	5.7	14.6	14.6	0.6	28.6	0.9
Cycle Q Clear(g_c), s	3.7	0.0	0.3	4.0	0.0	0.0	5.7	14.6	14.6	0.6	28.6	0.9
Prop In Lane	0.93		1.00	0.73		0.05	1.00		0.03	1.00		1.00
Lane Grp Cap(c), veh/h	236	0	141	175	0	0	144	1321	1383	14	2383	1064
V/C Ratio(X)	0.32	0.00	0.04	0.13	0.00	0.00	0.79	0.52	0.52	0.77	0.73	0.05
Avail Cap(c_a), veh/h	464	0	392	413	0	0	411	1677	1756	215	2965	1323
HCM Platoon Ratio	1.00	1.00	1.00	1.00	1.00	1.00	1.00	1.00	1.00	1.00	1.00	1.00
Upstream Filter(I)	1.00	0.00	1.00	1.00	0.00	0.00	1.00	1.00	1.00	1.00	1.00	1.00
Uniform Delay (d), s/veh	38.7	0.0	37.6	38.3	0.0	0.0	40.9	4.8	4.8	44.9	9.5	5.0
Incr Delay (d2), s/veh	0.3	0.0	0.0	0.1	0.0	0.0	3.7	0.7	0.7	27.4	1.1	0.0
Initial Q Delay(d3),s/veh	0.0	0.0	0.0	0.0	0.0	0.0	0.0	0.0	0.0	0.0	0.0	0.0
%ile BackOfQ(50%),veh/ln	1.8	0.0	0.1	0.5	0.0	0.0	3.0	7.3	7.7	0.4	14.1	0.4
LnGrp Delay(d),s/veh	39.0	0.0	37.6	38.4	0.0	0.0	44.6	5.5	5.4	72.3	10.6	5.0
LnGrp LOS	D		D	D			D	A	A	E	B	A
Approach Vol, veh/h		81			22			1522			1798	
Approach Delay, s/veh		38.9			38.4			8.4			10.9	
Approach LOS		D			D			A			B	

Timer	1	2	3	4	5	6	7	8
Assigned Phs	1	2		4	5	6		8
Phs Duration (G+Y+Rc), s	11.4	66.1		13.3	4.7	72.7		13.3
Change Period (Y+Rc), s	4.0	5.0		5.0	4.0	5.0		5.0
Max Green Setting (Gmax), s	21.0	76.0		23.0	11.0	86.0		23.0
Max Q Clear Time (g_c+I1), s	7.7	30.6		6.0	2.6	16.6		5.7
Green Ext Time (p_c), s	0.1	30.4		0.0	0.0	24.6		0.1

Intersection Summary	
HCM 2010 Ctrl Delay	10.6
HCM 2010 LOS	B

Movement	EBL	EBT	EBR	WBL	WBT	WBR	NBL	NBT	NBR	SBL	SBT	SBR
Lane Configurations												
Traffic Volume (veh/h)	75	5	180	45	5	40	110	1345	50	35	1665	85
Future Volume (veh/h)	75	5	180	45	5	40	110	1345	50	35	1665	85
Number	3	8	18	7	4	14	1	6	16	5	2	12
Initial Q (Qb), veh	0	0	0	0	0	0	0	0	0	0	0	0
Ped-Bike Adj(A_pbT)	1.00		1.00	1.00		1.00	1.00		1.00	1.00		1.00
Parking Bus, Adj	1.00	1.00	1.00	1.00	1.00	1.00	1.00	1.00	1.00	1.00	1.00	1.00
Adj Sat Flow, veh/h/ln	1900	1863	1863	1863	1863	1900	1863	1863	1863	1863	1863	1863
Adj Flow Rate, veh/h	82	5	11	49	5	3	120	1462	34	38	1810	54
Adj No. of Lanes	0	1	1	1	1	0	1	2	1	1	2	1
Peak Hour Factor	0.92	0.92	0.92	0.92	0.92	0.92	0.92	0.92	0.92	0.92	0.92	0.92
Percent Heavy Veh, %	2	2	2	2	2	2	2	2	2	2	2	2
Cap, veh/h	252	13	213	185	147	88	152	2361	1056	60	2178	974
Arrive On Green	0.15	0.14	0.14	0.14	0.14	0.14	0.09	0.67	0.67	0.03	0.62	0.62
Sat Flow, veh/h	1299	96	1576	1387	1090	654	1774	3539	1583	1774	3539	1583
Grp Volume(v), veh/h	87	0	11	49	0	8	120	1462	34	38	1810	54
Grp Sat Flow(s),veh/h/ln	1395	0	1576	1387	0	1744	1774	1770	1583	1774	1770	1583
Q Serve(g_s), s	5.0	0.0	0.6	3.1	0.0	0.4	6.1	21.5	0.7	1.9	36.9	1.2
Cycle Q Clear(g_c), s	5.3	0.0	0.6	8.4	0.0	0.4	6.1	21.5	0.7	1.9	36.9	1.2
Prop In Lane	0.94		1.00	1.00		0.38	1.00		1.00	1.00		1.00
Lane Grp Cap(c), veh/h	280	0	213	185	0	236	152	2361	1056	60	2178	974
V/C Ratio(X)	0.31	0.00	0.05	0.26	0.00	0.03	0.79	0.62	0.03	0.63	0.83	0.06
Avail Cap(c_a), veh/h	460	0	413	361	0	457	407	2666	1193	232	2318	1037
HCM Platoon Ratio	1.00	1.00	1.00	1.00	1.00	1.00	1.00	1.00	1.00	1.00	1.00	1.00
Upstream Filter(I)	1.00	0.00	1.00	1.00	0.00	1.00	1.00	1.00	1.00	1.00	1.00	1.00
Uniform Delay (d), s/veh	36.2	0.0	34.5	40.5	0.0	34.4	41.1	8.6	5.2	43.7	13.9	7.0
Incr Delay (d2), s/veh	0.6	0.0	0.1	0.8	0.0	0.1	3.4	0.6	0.0	4.1	3.0	0.1
Initial Q Delay(d3),s/veh	0.0	0.0	0.0	0.0	0.0	0.0	0.0	0.0	0.0	0.0	0.0	0.0
%ile BackOfQ(50%),veh/ln	2.0	0.0	0.2	1.2	0.0	0.2	3.1	10.6	0.3	1.0	18.8	0.6
LnGrp Delay(d),s/veh	36.8	0.0	34.6	41.2	0.0	34.5	44.5	9.3	5.2	47.7	16.9	7.1
LnGrp LOS	D		C	D		C	D	A	A	D	B	A
Approach Vol, veh/h		98			57			1616			1902	
Approach Delay, s/veh		36.6			40.3			11.8			17.2	
Approach LOS		D			D			B			B	

Timer	1	2	3	4	5	6	7	8
Assigned Phs	1	2		4	5	6		8
Phs Duration (G+Y+Rc), s	11.9	62.4		17.4	7.1	67.1		17.4
Change Period (Y+Rc), s	4.0	6.0		5.0	4.0	6.0		5.0
Max Green Setting (Gmax), s	21.0	60.0		24.0	12.0	69.0		24.0
Max Q Clear Time (g_c+I1), s	8.1	38.9		10.4	3.9	23.5		7.3
Green Ext Time (p_c), s	0.2	17.5		0.1	0.0	24.1		0.3

Intersection Summary	
HCM 2010 Ctrl Delay	15.7
HCM 2010 LOS	B

Movement	EBL	EBT	EBR	WBL	WBT	WBR	NBL	NBT	NBR	SBL	SBT	SBR
Lane Configurations												
Traffic Volume (veh/h)	350	5	585	15	5	20	445	1355	15	60	1555	245
Future Volume (veh/h)	350	5	585	15	5	20	445	1355	15	60	1555	245
Number	3	8	18	7	4	14	1	6	16	5	2	12
Initial Q (Qb), veh	0	0	0	0	0	0	0	0	0	0	0	0
Ped-Bike Adj(A_pbT)	1.00		1.00	1.00		1.00	1.00		1.00	1.00		1.00
Parking Bus, Adj	1.00	1.00	1.00	1.00	1.00	1.00	1.00	1.00	1.00	1.00	1.00	1.00
Adj Sat Flow, veh/h/ln	1863	1863	1863	1900	1863	1900	1863	1863	1900	1863	1863	1863
Adj Flow Rate, veh/h	384	0	436	16	5	7	484	1473	16	65	1690	221
Adj No. of Lanes	2	0	2	0	1	0	2	2	0	1	2	1
Peak Hour Factor	0.92	0.92	0.92	0.92	0.92	0.92	0.92	0.92	0.92	0.92	0.92	0.92
Percent Heavy Veh, %	2	2	2	2	2	2	2	2	2	2	2	2
Cap, veh/h	521	0	970	36	11	16	567	2426	26	101	2013	1124
Arrive On Green	0.15	0.00	0.14	0.04	0.04	0.02	0.16	0.68	0.67	0.06	0.57	0.57
Sat Flow, veh/h	3548	0	3167	992	310	434	3442	3587	39	1774	3539	1582
Grp Volume(v), veh/h	384	0	436	28	0	0	484	726	763	65	1690	221
Grp Sat Flow(s),veh/h/ln	1774	0	1583	1737	0	0	1721	1770	1856	1774	1770	1582
Q Serve(g_s), s	19.8	0.0	21.2	3.0	0.0	0.0	26.1	43.1	43.2	6.9	75.3	9.0
Cycle Q Clear(g_c), s	19.8	0.0	21.2	3.0	0.0	0.0	26.1	43.1	43.2	6.9	75.3	9.0
Prop In Lane	1.00		1.00	0.57		0.25	1.00		0.02	1.00		1.00
Lane Grp Cap(c), veh/h	521	0	970	63	0	0	567	1197	1255	101	2013	1124
V/C Ratio(X)	0.74	0.00	0.45	0.45	0.00	0.00	0.85	0.61	0.61	0.64	0.84	0.20
Avail Cap(c_a), veh/h	631	0	1068	282	0	0	1044	1796	1884	139	2796	1474
HCM Platoon Ratio	1.00	1.00	1.00	1.00	1.00	1.00	1.00	1.00	1.00	1.00	1.00	1.00
Upstream Filter(I)	1.00	0.00	1.00	1.00	0.00	0.00	1.00	1.00	1.00	1.00	1.00	1.00
Uniform Delay (d), s/veh	78.0	0.0	53.3	90.6	0.0	0.0	77.6	17.0	17.0	88.2	34.0	9.3
Incr Delay (d2), s/veh	2.7	0.0	0.1	1.8	0.0	0.0	1.5	0.7	0.7	2.5	2.1	0.1
Initial Q Delay(d3),s/veh	0.0	0.0	0.0	0.0	0.0	0.0	0.0	0.0	0.0	0.0	0.0	0.0
%ile BackOfQ(50%),veh/ln	9.9	0.0	9.3	1.5	0.0	0.0	12.6	21.2	22.3	3.4	37.2	5.9
LnGrp Delay(d),s/veh	80.7	0.0	53.5	92.4	0.0	0.0	79.1	17.7	17.7	90.8	36.1	9.4
LnGrp LOS	F		D	F			E	B	B	F	D	A
Approach Vol, veh/h		820			28			1973			1976	
Approach Delay, s/veh		66.2			92.4			32.7			34.9	
Approach LOS		E			F			C			C	

Timer	1	2	3	4	5	6	7	8
Assigned Phs	1	2		4	5	6		8
Phs Duration (G+Y+Rc), s	35.5	112.7		10.9	14.9	133.3		32.0
Change Period (Y+Rc), s	6.0	6.0		7.0	6.0	6.0		7.0
Max Green Setting (Gmax), s	56.0	149.0		28.0	13.0	192.0		31.0
Max Q Clear Time (g_c+I1), s	29.1	77.3		5.0	8.9	45.2		23.2
Green Ext Time (p_c), s	1.3	29.3		0.0	0.0	17.7		1.9

Intersection Summary	
HCM 2010 Ctrl Delay	39.7
HCM 2010 LOS	D

Notes

Movement	EBL	EBT	EBR	WBL	WBT	WBR	NBL	NBT	NBR	SBL	SBT	SBR
Lane Configurations												
Traffic Volume (veh/h)	5	0	5	135	5	70	5	1690	90	95	2130	10
Future Volume (veh/h)	5	0	5	135	5	70	5	1690	90	95	2130	10
Number	3	8	18	7	4	14	1	6	16	5	2	12
Initial Q (Qb), veh	0	0	0	0	0	0	0	0	0	0	0	0
Ped-Bike Adj(A_pbT)	1.00		1.00	1.00		1.00	1.00		1.00	1.00		1.00
Parking Bus, Adj	1.00	1.00	1.00	1.00	1.00	1.00	1.00	1.00	1.00	1.00	1.00	1.00
Adj Sat Flow, veh/h/ln	1900	1863	1900	1863	1863	1900	1863	1863	1900	1863	1863	1900
Adj Flow Rate, veh/h	5	0	1	147	5	5	5	1837	95	103	2315	11
Adj No. of Lanes	0	1	0	1	1	0	1	2	0	1	2	0
Peak Hour Factor	0.92	0.92	0.92	0.92	0.92	0.92	0.92	0.92	0.92	0.92	0.92	0.92
Percent Heavy Veh, %	2	2	2	2	2	2	2	2	2	2	2	2
Cap, veh/h	194	5	30	234	107	107	11	2431	125	129	2803	13
Arrive On Green	0.13	0.00	0.12	0.13	0.13	0.12	0.01	0.94	0.93	0.07	0.78	0.77
Sat Flow, veh/h	1140	37	235	1410	856	856	1774	3426	176	1774	3612	17
Grp Volume(v), veh/h	6	0	0	147	0	10	5	941	991	103	1133	1193
Grp Sat Flow(s),veh/h/ln	1412	0	0	1410	0	1712	1774	1770	1832	1774	1770	1860
Q Serve(g_s), s	0.0	0.0	0.0	12.4	0.0	0.7	0.4	13.3	14.3	7.4	51.9	52.1
Cycle Q Clear(g_c), s	0.7	0.0	0.0	13.0	0.0	0.7	0.4	13.3	14.3	7.4	51.9	52.1
Prop In Lane	0.83		0.17	1.00		0.50	1.00		0.10	1.00		0.01
Lane Grp Cap(c), veh/h	228	0	0	234	0	215	11	1256	1300	129	1373	1443
V/C Ratio(X)	0.03	0.00	0.00	0.63	0.00	0.05	0.44	0.75	0.76	0.80	0.83	0.83
Avail Cap(c_a), veh/h	312	0	0	318	0	316	150	1256	1300	150	1373	1443
HCM Platoon Ratio	1.00	1.00	1.00	1.00	1.00	1.00	1.33	1.33	1.33	1.00	1.00	1.00
Upstream Filter(I)	1.00	0.00	0.00	1.00	0.00	1.00	0.67	0.67	0.67	1.00	1.00	1.00
Uniform Delay (d), s/veh	50.0	0.0	0.0	55.3	0.0	50.2	64.2	1.4	1.5	59.3	9.1	9.1
Incr Delay (d2), s/veh	0.0	0.0	0.0	2.8	0.0	0.1	6.7	2.8	2.9	19.3	5.8	5.6
Initial Q Delay(d3),s/veh	0.0	0.0	0.0	0.0	0.0	0.0	0.0	0.0	0.0	0.0	0.0	0.0
%ile BackOfQ(50%),veh/ln	0.2	0.0	0.0	5.3	0.0	0.3	0.2	6.4	7.2	4.3	27.1	28.4
LnGrp Delay(d),s/veh	50.0	0.0	0.0	58.1	0.0	50.3	70.9	4.3	4.4	78.6	14.8	14.7
LnGrp LOS	D			E		D	E	A	A	E	B	B
Approach Vol, veh/h		6			157			1937			2429	
Approach Delay, s/veh		50.0			57.6			4.5			17.5	
Approach LOS		D			E			A			B	

Timer	1	2	3	4	5	6	7	8
Assigned Phs	1	2		4	5	6		8
Phs Duration (G+Y+Rc), s	4.8	104.9		20.3	13.5	96.2		20.3
Change Period (Y+Rc), s	4.0	5.0		5.0	4.0	5.0		5.0
Max Green Setting (Gmax), s	11.0	82.0		23.0	11.0	82.0		23.0
Max Q Clear Time (g_c+I1), s	2.4	54.1		15.0	9.4	16.3		2.7
Green Ext Time (p_c), s	0.0	26.0		0.3	0.0	44.1		0.0

Intersection Summary	
HCM 2010 Ctrl Delay	13.4
HCM 2010 LOS	B

Movement	EBL	EBT	EBR	WBL	WBT	WBR	NBL	NBT	NBR	SBL	SBT	SBR
Lane Configurations												
Traffic Volume (veh/h)	150	5	15	65	5	15	15	1615	15	10	1890	285
Future Volume (veh/h)	150	5	15	65	5	15	15	1615	15	10	1890	285
Number	3	8	18	7	4	14	1	6	16	5	2	12
Initial Q (Qb), veh	0	0	0	0	0	0	0	0	0	0	0	0
Ped-Bike Adj(A_pbT)	1.00		1.00	1.00		1.00	1.00		1.00	1.00		1.00
Parking Bus, Adj	1.00	1.00	1.00	1.00	1.00	1.00	1.00	1.00	1.00	1.00	1.00	1.00
Adj Sat Flow, veh/h/ln	1900	1863	1900	1900	1863	1900	1863	1863	1900	1863	1863	1863
Adj Flow Rate, veh/h	163	5	14	71	5	9	16	1755	16	11	2054	238
Adj No. of Lanes	0	1	0	0	1	0	1	2	0	1	2	1
Peak Hour Factor	0.92	0.92	0.92	0.92	0.92	0.92	0.92	0.92	0.92	0.92	0.92	0.92
Percent Heavy Veh, %	2	2	2	2	2	2	2	2	2	2	2	2
Cap, veh/h	244	6	16	244	19	25	19	2720	25	13	2668	1193
Arrive On Green	0.14	0.14	0.14	0.14	0.14	0.14	0.01	0.76	0.75	0.01	0.75	0.75
Sat Flow, veh/h	1338	41	115	1347	129	175	1774	3594	33	1774	3539	1582
Grp Volume(v), veh/h	182	0	0	85	0	0	16	863	908	11	2054	238
Grp Sat Flow(s),veh/h/ln	1494	0	0	1651	0	0	1774	1770	1857	1774	1770	1582
Q Serve(g_s), s	9.4	0.0	0.0	0.0	0.0	0.0	1.2	30.1	30.2	0.8	44.3	5.7
Cycle Q Clear(g_c), s	15.2	0.0	0.0	5.8	0.0	0.0	1.2	30.1	30.2	0.8	44.3	5.7
Prop In Lane	0.90		0.08	0.84		0.11	1.00		0.02	1.00		1.00
Lane Grp Cap(c), veh/h	267	0	0	287	0	0	19	1339	1405	13	2668	1193
V/C Ratio(X)	0.68	0.00	0.00	0.30	0.00	0.00	0.84	0.64	0.65	0.82	0.77	0.20
Avail Cap(c_a), veh/h	347	0	0	368	0	0	109	1339	1405	109	2668	1193
HCM Platoon Ratio	1.00	1.00	1.00	1.00	1.00	1.00	1.00	1.00	1.00	1.00	1.00	1.00
Upstream Filter(I)	1.00	0.00	0.00	1.00	0.00	0.00	0.57	0.57	0.57	0.43	0.43	0.43
Uniform Delay (d), s/veh	54.0	0.0	0.0	50.2	0.0	0.0	64.2	7.5	7.5	64.4	9.4	4.6
Incr Delay (d2), s/veh	3.6	0.0	0.0	0.6	0.0	0.0	18.5	1.4	1.3	17.3	1.0	0.2
Initial Q Delay(d3),s/veh	0.0	0.0	0.0	0.0	0.0	0.0	0.0	0.0	0.0	0.0	0.0	0.0
%ile BackOfQ(50%),veh/ln	6.6	0.0	0.0	2.8	0.0	0.0	0.7	14.9	15.9	0.5	21.8	2.5
LnGrp Delay(d),s/veh	57.6	0.0	0.0	50.8	0.0	0.0	82.7	8.9	8.9	81.7	10.4	4.8
LnGrp LOS	E			D			F	A	A	F	B	A
Approach Vol, veh/h		182			85			1787			2303	
Approach Delay, s/veh		57.6			50.8			9.5			10.1	
Approach LOS		E			D			A			B	

Timer	1	2	3	4	5	6	7	8
Assigned Phs	1	2		4	5	6		8
Phs Duration (G+Y+Rc), s	5.4	102.0		22.6	5.0	102.4		22.6
Change Period (Y+Rc), s	4.0	5.0		5.0	4.0	5.0		5.0
Max Green Setting (Gmax), s	8.0	83.0		25.0	8.0	83.0		25.0
Max Q Clear Time (g_c+I1), s	3.2	46.3		7.8	2.8	32.2		17.2
Green Ext Time (p_c), s	0.0	34.3		0.2	0.0	39.7		0.4

Intersection Summary	
HCM 2010 Ctrl Delay	12.7
HCM 2010 LOS	B

Movement	EBL	EBT	EBR	WBL	WBT	WBR	NBL	NBT	NBR	SBL	SBT	SBR
Lane Configurations												
Traffic Volume (veh/h)	210	20	50	90	20	20	60	1625	60	15	1890	140
Future Volume (veh/h)	210	20	50	90	20	20	60	1625	60	15	1890	140
Number	3	8	18	7	4	14	1	6	16	5	2	12
Initial Q (Qb), veh	0	0	0	0	0	0	0	0	0	0	0	0
Ped-Bike Adj(A_pbT)	1.00		1.00	1.00		1.00	1.00		0.99	1.00		1.00
Parking Bus, Adj	1.00	1.00	1.00	1.00	1.00	1.00	1.00	1.00	1.00	1.00	1.00	1.00
Adj Sat Flow, veh/h/ln	1863	1863	1900	1863	1863	1900	1863	1863	1900	1863	1863	1900
Adj Flow Rate, veh/h	228	22	7	98	22	4	65	1766	63	16	2054	148
Adj No. of Lanes	1	1	0	1	1	0	1	2	0	1	2	0
Peak Hour Factor	0.92	0.92	0.92	0.92	0.92	0.92	0.92	0.92	0.92	0.92	0.92	0.92
Percent Heavy Veh, %	2	2	2	2	2	2	2	2	2	2	2	2
Cap, veh/h	314	271	86	311	307	56	83	2429	86	19	2215	158
Arrive On Green	0.20	0.20	0.20	0.20	0.20	0.19	0.05	0.70	0.69	0.01	0.88	0.87
Sat Flow, veh/h	1373	1354	431	1370	1533	279	1774	3486	124	1774	3351	239
Grp Volume(v), veh/h	228	0	29	98	0	26	65	892	937	16	1073	1129
Grp Sat Flow(s),veh/h/ln	1373	0	1784	1370	0	1812	1774	1770	1840	1774	1770	1820
Q Serve(g_s), s	21.0	0.0	1.7	8.1	0.0	1.5	4.7	40.1	40.9	1.2	49.2	56.0
Cycle Q Clear(g_c), s	22.5	0.0	1.7	9.9	0.0	1.5	4.7	40.1	40.9	1.2	49.2	56.0
Prop In Lane	1.00		0.24	1.00		0.15	1.00		0.07	1.00		0.13
Lane Grp Cap(c), veh/h	314	0	357	311	0	362	83	1233	1282	19	1170	1203
V/C Ratio(X)	0.73	0.00	0.08	0.31	0.00	0.07	0.78	0.72	0.73	0.84	0.92	0.94
Avail Cap(c_a), veh/h	367	0	426	364	0	432	109	1233	1282	109	1170	1203
HCM Platoon Ratio	1.00	1.00	1.00	1.00	1.00	1.00	1.00	1.00	1.00	1.33	1.33	1.33
Upstream Filter(I)	1.00	0.00	1.00	1.00	0.00	1.00	0.39	0.39	0.39	0.51	0.51	0.51
Uniform Delay (d), s/veh	51.3	0.0	42.3	46.3	0.0	42.3	61.3	12.0	12.2	64.0	5.6	6.1
Incr Delay (d2), s/veh	5.9	0.0	0.1	0.6	0.0	0.1	7.2	1.5	1.5	16.7	7.3	8.8
Initial Q Delay(d3),s/veh	0.0	0.0	0.0	0.0	0.0	0.0	0.0	0.0	0.0	0.0	0.0	0.0
%ile BackOfQ(50%),veh/ln	8.5	0.0	0.9	3.1	0.0	0.8	2.5	19.8	21.1	0.7	24.8	29.1
LnGrp Delay(d),s/veh	57.2	0.0	42.4	46.9	0.0	42.3	68.5	13.5	13.6	80.7	12.9	15.0
LnGrp LOS	E		D	D		D	E	B	B	F	B	B
Approach Vol, veh/h		257			124			1894			2218	
Approach Delay, s/veh		55.6			45.9			15.5			14.5	
Approach LOS		E			D			B			B	

Timer	1	2	3	4	5	6	7	8
Assigned Phs	1	2		4	5	6		8
Phs Duration (G+Y+Rc), s	10.1	89.9		30.0	5.4	94.6		30.0
Change Period (Y+Rc), s	4.0	5.0		5.0	4.0	5.0		5.0
Max Green Setting (Gmax), s	8.0	78.0		30.0	8.0	78.0		30.0
Max Q Clear Time (g_c+I1), s	6.7	58.0		11.9	3.2	42.9		24.5
Green Ext Time (p_c), s	0.0	18.5		0.4	0.0	26.2		0.5

Intersection Summary	
HCM 2010 Ctrl Delay	18.1
HCM 2010 LOS	B

Notes

Movement	EBL	EBT	EBR	WBL	WBT	WBR	NBL	NBT	NBR	SBL	SBT	SBR
Lane Configurations												
Traffic Volume (veh/h)	65	150	90	145	130	715	80	950	195	610	1175	105
Future Volume (veh/h)	65	150	90	145	130	715	80	950	195	610	1175	105
Number	7	4	14	3	8	18	1	6	16	5	2	12
Initial Q (Qb), veh	0	0	0	0	0	0	0	0	0	0	0	0
Ped-Bike Adj(A_pbT)	0.98		0.96	1.00		0.97	1.00		0.99	1.00		1.00
Parking Bus, Adj	1.00	1.00	1.00	1.00	1.00	1.00	1.00	1.00	1.00	1.00	1.00	1.00
Adj Sat Flow, veh/h/ln	1900	1863	1863	1863	1863	1863	1863	1863	1863	1863	1863	1900
Adj Flow Rate, veh/h	71	163	11	158	141	397	87	1033	125	663	1277	110
Adj No. of Lanes	0	1	1	1	1	1	1	2	1	2	2	0
Peak Hour Factor	0.92	0.92	0.92	0.92	0.92	0.92	0.92	0.92	0.92	0.92	0.92	0.92
Percent Heavy Veh, %	2	2	2	2	2	2	2	2	2	2	2	2
Cap, veh/h	106	192	282	250	577	477	110	1359	599	737	1769	152
Arrive On Green	0.19	0.19	0.19	0.09	0.31	0.31	0.06	0.38	0.38	0.21	0.54	0.53
Sat Flow, veh/h	378	1030	1514	1774	1863	1542	1774	3539	1561	3442	3299	283
Grp Volume(v), veh/h	234	0	11	158	141	397	87	1033	125	663	684	703
Grp Sat Flow(s),veh/h/ln	1408	0	1514	1774	1863	1542	1774	1770	1561	1721	1770	1812
Q Serve(g_s), s	18.9	0.0	0.8	9.0	7.4	31.1	6.3	33.0	7.0	24.4	37.9	38.3
Cycle Q Clear(g_c), s	21.0	0.0	0.8	9.0	7.4	31.1	6.3	33.0	7.0	24.4	37.9	38.3
Prop In Lane	0.30		1.00	1.00		1.00	1.00		1.00	1.00		0.16
Lane Grp Cap(c), veh/h	298	0	282	250	577	477	110	1359	599	737	949	972
V/C Ratio(X)	0.78	0.00	0.04	0.63	0.24	0.83	0.79	0.76	0.21	0.90	0.72	0.72
Avail Cap(c_a), veh/h	317	0	303	276	630	522	328	1359	599	953	949	972
HCM Platoon Ratio	1.00	1.00	1.00	1.00	1.00	1.00	1.00	1.00	1.00	1.00	1.00	1.00
Upstream Filter(I)	1.00	0.00	1.00	1.00	1.00	1.00	0.79	0.79	0.79	0.25	0.25	0.25
Uniform Delay (d), s/veh	51.3	0.0	43.4	37.9	33.5	41.7	60.2	34.8	26.8	49.7	22.8	22.9
Incr Delay (d2), s/veh	11.6	0.0	0.1	4.0	0.2	10.3	3.8	3.2	0.6	2.3	1.2	1.2
Initial Q Delay(d3),s/veh	0.0	0.0	0.0	0.0	0.0	0.0	0.0	0.0	0.0	0.0	0.0	0.0
%ile BackOfQ(50%),veh/ln	9.1	0.0	0.3	4.6	3.8	14.6	3.2	16.7	3.1	11.8	18.7	19.3
LnGrp Delay(d),s/veh	62.8	0.0	43.4	41.9	33.7	52.0	64.0	38.1	27.4	52.0	24.0	24.1
LnGrp LOS	E		D	D	C	D	E	D	C	D	C	C
Approach Vol, veh/h		245			696			1245			2050	
Approach Delay, s/veh		62.0			46.0			38.8			33.1	
Approach LOS		E			D			D			C	

Timer	1	2	3	4	5	6	7	8
Assigned Phs	1	2	3	4	5	6		8
Phs Duration (G+Y+Rc), s	12.0	73.7	16.0	28.2	31.9	53.9		44.2
Change Period (Y+Rc), s	4.0	5.0	5.0	5.0	4.0	5.0		5.0
Max Green Setting (Gmax), s	24.0	49.0	13.0	25.0	36.0	37.0		43.0
Max Q Clear Time (g_c+I1), s	9.3	40.3	11.0	23.0	26.4	35.0		33.1
Green Ext Time (p_c), s	0.1	6.7	0.1	0.2	1.5	1.6		1.9

Intersection Summary	
HCM 2010 Ctrl Delay	38.6
HCM 2010 LOS	D

Notes

Intersection	
Int Delay, s/veh	0.9

Movement	WBL	WBR	NBT	NBR	SBL	SBT
Lane Configurations		↱	↑	↱		↑
Traffic Vol, veh/h	0	95	740	110	0	970
Future Vol, veh/h	0	95	740	110	0	970
Conflicting Peds, #/hr	0	0	0	0	0	0
Sign Control	Stop	Stop	Free	Free	Free	Free
RT Channelized	-	None	-	None	-	None
Storage Length	-	0	-	0	-	-
Veh in Median Storage, #	0	-	0	-	-	0
Grade, %	0	-	0	-	-	0
Peak Hour Factor	92	92	92	92	92	92
Heavy Vehicles, %	2	2	2	2	2	2
Mvmt Flow	0	103	804	120	0	1054

Major/Minor	Minor1		Major1		Major2	
Conflicting Flow All	-	804	0	0	-	-
Stage 1	-	-	-	-	-	-
Stage 2	-	-	-	-	-	-
Critical Hdwy	-	6.22	-	-	-	-
Critical Hdwy Stg 1	-	-	-	-	-	-
Critical Hdwy Stg 2	-	-	-	-	-	-
Follow-up Hdwy	-	3.318	-	-	-	-
Pot Cap-1 Maneuver	0	383	-	-	0	-
Stage 1	0	-	-	-	0	-
Stage 2	0	-	-	-	0	-
Platoon blocked, %			-	-		-
Mov Cap-1 Maneuver	-	383	-	-	-	-
Mov Cap-2 Maneuver	-	-	-	-	-	-
Stage 1	-	-	-	-	-	-
Stage 2	-	-	-	-	-	-

Approach	WB	NB	SB
HCM Control Delay, s	17.8	0	0
HCM LOS	C		

Minor Lane/Major Mvmt	NBT	NBR	WBLn1	SBT
Capacity (veh/h)	-	-	383	-
HCM Lane V/C Ratio	-	-	0.27	-
HCM Control Delay (s)	-	-	17.8	-
HCM Lane LOS	-	-	C	-
HCM 95th %tile Q(veh)	-	-	1.1	-

Intersection	
Int Delay, s/veh	1.8

Movement	WBL	WBR	NBT	NBR	SBL	SBT
Lane Configurations						
Traffic Vol, veh/h	60	35	940	75	40	1030
Future Vol, veh/h	60	35	940	75	40	1030
Conflicting Peds, #/hr	0	0	0	0	0	0
Sign Control	Stop	Stop	Free	Free	Free	Free
RT Channelized	-	None	-	None	-	None
Storage Length	0	100	-	100	100	-
Veh in Median Storage, #	0	-	0	-	-	0
Grade, %	0	-	0	-	-	0
Peak Hour Factor	92	92	92	92	92	92
Heavy Vehicles, %	2	2	2	2	2	2
Mvmt Flow	65	38	1022	82	43	1120

Major/Minor	Minor1		Major1		Major2	
Conflicting Flow All	2228	1022	0	0	1104	0
Stage 1	1022	-	-	-	-	-
Stage 2	1206	-	-	-	-	-
Critical Hdwy	6.42	6.22	-	-	4.12	-
Critical Hdwy Stg 1	5.42	-	-	-	-	-
Critical Hdwy Stg 2	5.42	-	-	-	-	-
Follow-up Hdwy	3.518	3.318	-	-	2.218	-
Pot Cap-1 Maneuver	~ 47	287	-	-	632	-
Stage 1	347	-	-	-	-	-
Stage 2	283	-	-	-	-	-
Platoon blocked, %			-	-		-
Mov Cap-1 Maneuver	~ 44	287	-	-	632	-
Mov Cap-2 Maneuver	145	-	-	-	-	-
Stage 1	323	-	-	-	-	-
Stage 2	283	-	-	-	-	-

Approach	WB	NB	SB
HCM Control Delay, s	37.9	0	0.4
HCM LOS	E		

Minor Lane/Major Mvmt	NBT	NBR	WBLn1	WBLn2	SBL	SBT
Capacity (veh/h)	-	-	145	287	632	-
HCM Lane V/C Ratio	-	-	0.45	0.133	0.069	-
HCM Control Delay (s)	-	-	48.7	19.5	11.1	-
HCM Lane LOS	-	-	E	C	B	-
HCM 95th %tile Q(veh)	-	-	2	0.5	0.2	-

Notes

~: Volume exceeds capacity $: Delay exceeds 300s +: Computation Not Defined *: All major volume in platoon

Intersection	
Int Delay, s/veh	11.1

Movement	EBL	EBT	EBR	WBL	WBT	WBR	NBL	NBT	NBR	SBL	SBT	SBR
Lane Configurations												
Traffic Vol, veh/h	190	105	125	5	95	5	115	5	5	5	5	180
Future Vol, veh/h	190	105	125	5	95	5	115	5	5	5	5	180
Conflicting Peds, #/hr	0	0	0	0	0	0	0	0	0	0	0	0
Sign Control	Free	Free	Free	Free	Free	Free	Stop	Stop	Stop	Stop	Stop	Stop
RT Channelized	-	-	None	-	-	None	-	-	None	-	-	None
Storage Length	100	-	-	100	-	-	-	-	-	-	-	-
Veh in Median Storage, #	-	0	-	-	0	-	-	0	-	-	0	-
Grade, %	-	0	-	-	0	-	-	0	-	-	0	-
Peak Hour Factor	92	92	92	92	92	92	92	92	92	92	92	92
Heavy Vehicles, %	2	2	2	2	2	2	2	2	2	2	2	2
Mvmt Flow	207	114	136	5	103	5	125	5	5	5	5	196

Major/Minor	Major1			Major2			Minor1			Minor2		
Conflicting Flow All	108	0	0	250	0	0	812	714	182	717	780	106
Stage 1	-	-	-	-	-	-	596	596	-	116	116	-
Stage 2	-	-	-	-	-	-	216	118	-	601	664	-
Critical Hdwy	4.12	-	-	4.12	-	-	7.12	6.52	6.22	7.12	6.52	6.22
Critical Hdwy Stg 1	-	-	-	-	-	-	6.12	5.52	-	6.12	5.52	-
Critical Hdwy Stg 2	-	-	-	-	-	-	6.12	5.52	-	6.12	5.52	-
Follow-up Hdwy	2.218	-	-	2.218	-	-	3.518	4.018	3.318	3.518	4.018	3.318
Pot Cap-1 Maneuver	1483	-	-	1316	-	-	298	357	861	345	327	948
Stage 1	-	-	-	-	-	-	490	492	-	889	800	-
Stage 2	-	-	-	-	-	-	786	798	-	487	458	-
Platoon blocked, %		-	-		-	-						
Mov Cap-1 Maneuver	1483	-	-	1316	-	-	207	306	861	301	280	948
Mov Cap-2 Maneuver	-	-	-	-	-	-	207	306	-	301	280	-
Stage 1	-	-	-	-	-	-	421	423	-	765	797	-
Stage 2	-	-	-	-	-	-	617	795	-	411	394	-

Approach	EB	WB	NB	SB
HCM Control Delay, s	3.5	0.4	46.3	10.6
HCM LOS			E	B

Minor Lane/Major Mvmt	NBLn1	EBL	EBT	EBR	WBL	WBT	WBR	SBLn1
Capacity (veh/h)	216	1483	-	-	1316	-	-	847
HCM Lane V/C Ratio	0.629	0.139	-	-	0.004	-	-	0.244
HCM Control Delay (s)	46.3	7.8	-	-	7.7	-	-	10.6
HCM Lane LOS	E	A	-	-	A	-	-	B
HCM 95th %tile Q(veh)	3.7	0.5	-	-	0	-	-	1

Intersection	
Int Delay, s/veh	4.8

Movement	EBL	EBT	EBR	WBL	WBT	WBR	NBL	NBT	NBR	SBL	SBT	SBR
Lane Configurations												
Traffic Vol, veh/h	25	20	65	5	25	5	55	5	5	5	5	20
Future Vol, veh/h	25	20	65	5	25	5	55	5	5	5	5	20
Conflicting Peds, #/hr	0	0	0	0	0	0	0	0	0	0	0	0
Sign Control	Free	Free	Free	Free	Free	Free	Stop	Stop	Stop	Stop	Stop	Stop
RT Channelized	-	-	None	-	-	None	-	-	None	-	-	None
Storage Length	-	-	-	-	-	-	-	-	-	-	-	-
Veh in Median Storage, #	-	0	-	-	0	-	-	0	-	-	0	-
Grade, %	-	0	-	-	0	-	-	0	-	-	0	-
Peak Hour Factor	92	92	92	92	92	92	92	92	92	92	92	92
Heavy Vehicles, %	2	2	2	2	2	2	2	2	2	2	2	2
Mvmt Flow	27	22	71	5	27	5	60	5	5	5	5	22

Major/Minor	Major1			Major2			Minor1			Minor2		
Conflicting Flow All	32	0	0	93	0	0	165	154	58	157	187	30
Stage 1	-	-	-	-	-	-	112	112	-	40	40	-
Stage 2	-	-	-	-	-	-	53	42	-	117	147	-
Critical Hdwy	4.12	-	-	4.12	-	-	7.12	6.52	6.22	7.12	6.52	6.22
Critical Hdwy Stg 1	-	-	-	-	-	-	6.12	5.52	-	6.12	5.52	-
Critical Hdwy Stg 2	-	-	-	-	-	-	6.12	5.52	-	6.12	5.52	-
Follow-up Hdwy	2.218	-	-	2.218	-	-	3.518	4.018	3.318	3.518	4.018	3.318
Pot Cap-1 Maneuver	1580	-	-	1501	-	-	800	738	1008	809	708	1044
Stage 1	-	-	-	-	-	-	893	803	-	975	862	-
Stage 2	-	-	-	-	-	-	960	860	-	888	775	-
Platoon blocked, %		-	-		-	-						
Mov Cap-1 Maneuver	1580	-	-	1501	-	-	766	723	1008	787	693	1044
Mov Cap-2 Maneuver	-	-	-	-	-	-	766	723	-	787	693	-
Stage 1	-	-	-	-	-	-	877	789	-	957	859	-
Stage 2	-	-	-	-	-	-	931	857	-	861	761	-

Approach	EB	WB	NB	SB
HCM Control Delay, s	1.7	1.1	10.1	9.1
HCM LOS			B	A

Minor Lane/Major Mvmt	NBLn1	EBL	EBT	EBR	WBL	WBT	WBR	SBLn1
Capacity (veh/h)	777	1580	-	-	1501	-	-	917
HCM Lane V/C Ratio	0.091	0.017	-	-	0.004	-	-	0.036
HCM Control Delay (s)	10.1	7.3	0	-	7.4	0	-	9.1
HCM Lane LOS	B	A	A	-	A	A	-	A
HCM 95th %tile Q(veh)	0.3	0.1	-	-	0	-	-	0.1

Intersection	
Int Delay, s/veh	2.1

Movement	EBT	EBR	WBL	WBT	NBL	NBR
Lane Configurations						
Traffic Vol, veh/h	60	55	5	55	40	5
Future Vol, veh/h	60	55	5	55	40	5
Conflicting Peds, #/hr	0	0	0	0	0	0
Sign Control	Free	Free	Free	Free	Stop	Stop
RT Channelized	-	None	-	None	-	None
Storage Length	-	-	-	-	0	-
Veh in Median Storage, #	0	-	-	0	0	-
Grade, %	0	-	-	0	0	-
Peak Hour Factor	92	92	92	92	92	92
Heavy Vehicles, %	2	2	2	2	2	2
Mvmt Flow	65	60	5	60	43	5

Major/Minor	Major1		Major2		Minor1	
Conflicting Flow All	0	0	125	0	165	95
Stage 1	-	-	-	-	95	-
Stage 2	-	-	-	-	70	-
Critical Hdwy	-	-	4.12	-	6.42	6.22
Critical Hdwy Stg 1	-	-	-	-	5.42	-
Critical Hdwy Stg 2	-	-	-	-	5.42	-
Follow-up Hdwy	-	-	2.218	-	3.518	3.318
Pot Cap-1 Maneuver	-	-	1462	-	826	962
Stage 1	-	-	-	-	929	-
Stage 2	-	-	-	-	953	-
Platoon blocked, %	-	-		-		
Mov Cap-1 Maneuver	-	-	1462	-	823	962
Mov Cap-2 Maneuver	-	-	-	-	823	-
Stage 1	-	-	-	-	925	-
Stage 2	-	-	-	-	953	-

Approach	EB	WB	NB
HCM Control Delay, s	0	0.6	9.6
HCM LOS			A

Minor Lane/Major Mvmt	NBLn1	EBT	EBR	WBL	WBT
Capacity (veh/h)	836	-	-	1462	-
HCM Lane V/C Ratio	0.059	-	-	0.004	-
HCM Control Delay (s)	9.6	-	-	7.5	0
HCM Lane LOS	A	-	-	A	A
HCM 95th %tile Q(veh)	0.2	-	-	0	-

Intersection	
Intersection Delay, s/veh	3.5
Intersection LOS	A

Approach	EB	WB	NB
Entry Lanes	1	1	1
Conflicting Circle Lanes	1	1	1
Adj Approach Flow, veh/h	38	21	21
Demand Flow Rate, veh/h	38	21	21
Vehicles Circulating, veh/h	5	16	22
Vehicles Exiting, veh/h	32	27	21
Follow-Up Headway, s	3.186	3.186	3.186
Ped Vol Crossing Leg, #/h	0	0	0
Ped Cap Adj	1.000	1.000	1.000
Approach Delay, s/veh	3.5	3.4	3.4
Approach LOS	A	A	A

Lane	Left	Left	Left
Designated Moves	TR	LT	LR
Assumed Moves	TR	LT	LR
RT Channelized			
Lane Util	1.000	1.000	1.000
Critical Headway, s	5.193	5.193	5.193
Entry Flow, veh/h	38	21	21
Cap Entry Lane, veh/h	1124	1112	1105
Entry HV Adj Factor	0.989	0.985	1.000
Flow Entry, veh/h	38	21	21
Cap Entry, veh/h	1112	1095	1105
V/C Ratio	0.034	0.019	0.019
Control Delay, s/veh	3.5	3.4	3.4
LOS	A	A	A
95th %tile Queue, veh	0	0	0

APPENDIX D

ROADWAY IMPROVEMENTS PLAN

Appendix D: Roadway Improvements Summary

Buildout Year	Project Scenario	Intersection	Roadway Improvement
ROADWAY IMPROVEMENTS WITHOUT PULELEHUA			
Planned Roadway Improvements (Without Project)	--	Lahaina Bypass Road	Lahaina Bypass Road (LBR) Phase 1B-2 - Extend LBR from Hokiokio Place to its southern terminus with Honoapiilani Highway - Reroute all northbound traffic to use LBR instead of Honoapiilani Highway - Signalize and modify intersection laneage along LBR at its intersections with Kai Hele Ku Street and Hokiokio Place
		Honoapiilani Highway/ Keawe Street/ Lahaina Cannery Mall	- Construct an additional southbound left-turn lane, resulting in dual southbound left-turn lanes - Optimize signal timing plans along the coordinated corridor from Leialii Parkway to Keawe Street
		Honoapiilani Highway/ Napilihau Street	- Construct an exclusive right-turn lane on the northbound Honoapiilani Highway approach - Construct an exclusive left-turn lane and shared through/right-turn lane on the westbound Napilihau Street approach
Base Year 2022 (Without Project)	--	Honoapiilani Highway/ Kaanapali Parkway/ Halelo Street	- Construct an additional eastbound left-turn lane, resulting in a dedicated left-turn lane, shared left-turn/through lane and two (2) dedicated right-turn lanes
Base Year 2027 (Without Project)	--	--	- No roadway improvements recommended

Appendix D: Roadway Improvements Summary cont'd

Buildout Year	Project Scenario	Intersection	Roadway Improvement
ROADWAY IMPROVEMENTS WITH PULELEHUA			
Future Year 2022 (With Project)	Scenario 1	--	- No additional roadway improvements recommended
	Scenario 2	Honoapiilani Highway/ Akahele Street [1]	- Optimize signal timing plan - Northbound left-turn lane → Lengthen lane to provide at least 275 feet of storage space - Southhbound left-turn lane → Lengthen lane to provide at least 275 feet of storage space - Westbound left-turn lane → Lengthen lane to provide at least 300 feet of storage space
		Honoapiilani Highway/ Project Retail Area North RIRO Access [1]	- Northbound right-turn lane → Provide a new right-turn with at least a 100 feet of storage space.
		Akahele Street @ Road A & Road C intersections	- Consider installing left-turn storage lanes along Akahele Street at Road A and Road C intersections
	Scenario 3	Honoapiilani Highway/ Road J (Project South Access) [1]	- Provide a median refuge lane along Honoapiilani Highway for westbound left-turn vehicles. - Northbound right-turn lane → Provide a new right-turn with at least a 100 feet of storage space - Southhbound left-turn lane → Provide a new left-turn with at least a 100 feet of storage space - Westbound left-turn lane → Provide a new right-turn with at least a 100 feet of storage space
Future Year 2027 (With Project)	Scenario 4	Honoapiilani Highway/ Kapunakea Street	- Consider restriping to provide exclusive eastbound left-turn lane and shared through/right-turn lane.

Notes:

1. Right-turn and left-turn lane lengths show required minimum storage space only. Additional taper length and/or deceleration length to be provided/verified upon intersection design. Based on AASHTO Green Book, 425 feet is recommended to accommodate full deceleration length with a design speed of 50 mph.

APPENDIX E

SIGNAL WARRANT

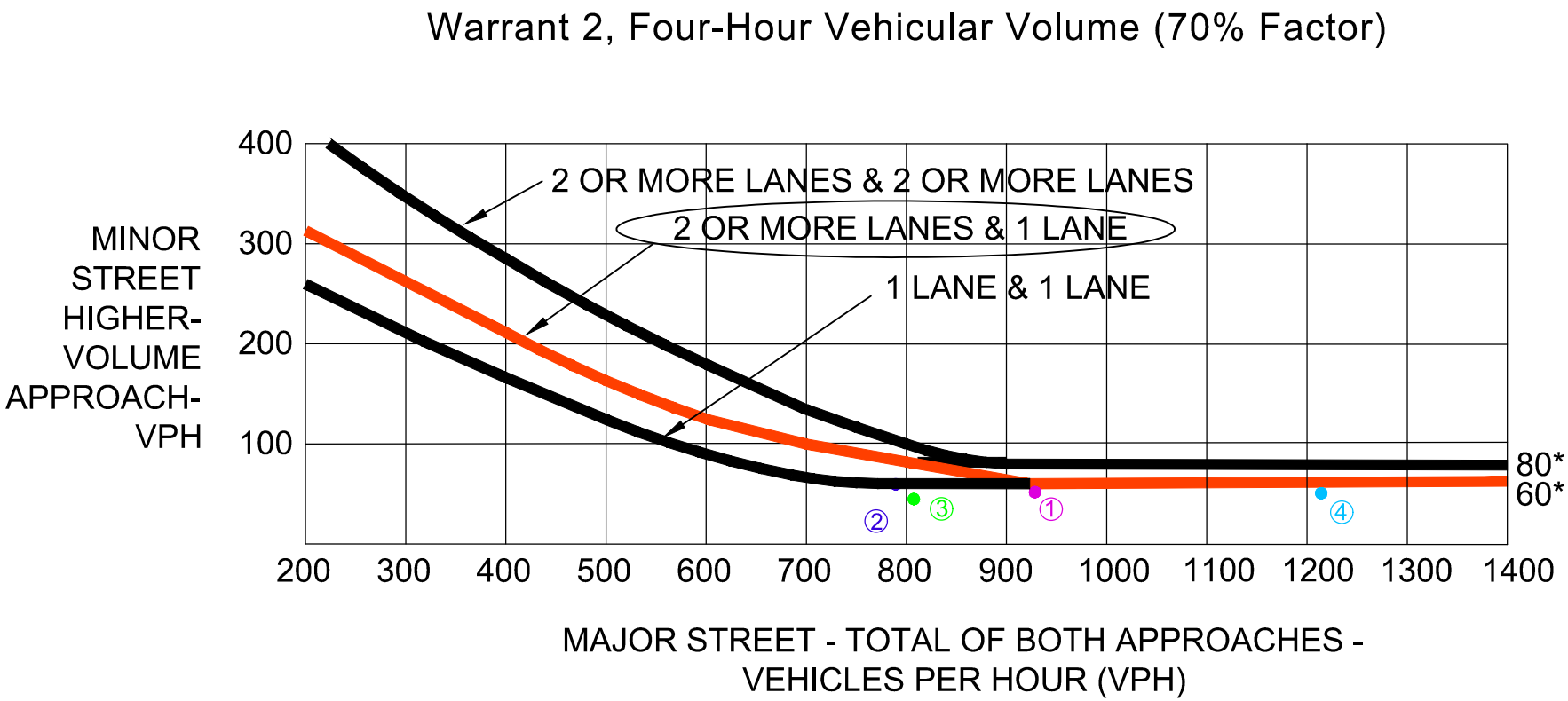

*Note: 80 vph applies as the lower threshold volume for a minor-street approach with two or more lanes and 60 vph applies as the lower threshold volume for a minor-street approach with one lane.

① (6:15 AM to 7:15 PM), (925, 57)
② (7:15 PM to 8:15 AM), (795, 65)
③ (8:15 AM to 9:15 AM), (807, 47)
④ (3:45 PM to 4:45 PM), (1210, 55)

PULELEHUA	AUSTIN, TSUTSUMI & ASSOCIATES, INC. ENGINEERS, SURVEYORS • HONOLULU, HAWAII	FIGURE
	FUTURE YEAR 2027 FOUR HOUR TRAFFIC SIGNAL WARRANT FOR HONOAPIILANI HIGHWAY/ROAD J INTERSECTION	1